Textures and Microstructures, 1982, Vol. 4, pp. 189–200
0730–3300/82/0404–0189 $06.50/0

The Resolution of Orientation Space with Reference to Pole-Figure Resolution

JÁNOS IMHOF
Aluterv-Fki, Budapest

(Received September 26, 1980; in final form December 12, 1980)

The orientation distribution function depends on the measured pole-figure data structure. With reference to the divisions of the pole-figure the orientation space is divided into classes, such that contain orientations indistinguishable on the basis of pole-figure data. These classes should refer to distinguishable values of the orientation distribution function. Divisions of orientation space are considered in formulating the fundamental equation of texture analysis. Probabilistic interpretation of the fundamental equation is formulated.

INTRODUCTION

The orientation distribution function $f(g)$ is either determined by the method of series expansion or by solving a system of linear equations. The latter method (Williams, 1968; Ruer and Baro, 1977; Ruer, 1979) gives rise to the formation of discrete arguments of $f(g)$. These arguments are groups of orientations which for example the vector method calls classes. Orientations belonging to one such class are not distinguished from each other, thus one constant $f(g)$ function value is rendered to all g orientations of the class.

The number of the classes are in some degree arbitrary. The objective of this paper is to find out the actual number of classes and to gain further information about the properties of these. The correspondence between points of orientation space and those of pole-figures are known (Hansen *et al.*, 1978). Considering an experimentally given division of a pole-figure, we may determine those classes in which the orientations cannot be distinguished with reference to the pole-figure.

In determining the orientation distribution function, the fundamental equation of texture analysis must be considered. In formulating the fundamental equation we consider the allocation of orientations to classes.

The number of classes that can be distinguished on the basis of measured pole-figure data in fact exceeds several times the number of measured pole-figure points. The use of the fundamental equation does not yield a sufficient number of equations in order to solve for unknown values of $f(g)$.

For this reason it is to consider the statistical nature of the data, applied by Mitchell and Rowland (1954). Working on this premise the probabilistic interpretation of the fundamental equation can also be formulated.

POLE-FIGURE SUBDIVISIONS

It is assumed that intensity measurements M_i belonging to a given $[HKL]$ low index crystallographic direction are taken along circles with constant radii α in $\Delta\beta$ steps. Here $\alpha = j \cdot \Delta\alpha$ and $j = 0, 1, \ldots, 90°/\Delta\alpha$. If we bisect the angular distance between measured points a subdivision of the pole-figure is obtained where each measured point is allocated to a $(\Delta\alpha, \Delta\beta)$ angular area. The notation R_k is assigned to $(\Delta\alpha, \Delta\beta)$ units where k denotes the serial number Figure 1.

The sample is rotated at $\alpha = 0°$ around the sample normal in $\Delta\beta$ steps. The mean, measured value is assigned to the point $\alpha = 0°$. Hence the vicinity of $\alpha = 0°$ within $\Delta\alpha/2$ is considered as one unit area.

At $\alpha = 90°$ measurements taken at β and $\beta + 180°$ are averaged, and this value is assigned to the sum of two $(\Delta\alpha/2, \Delta\beta)$ units. Two members of one such lumped unit are shown by the shaded areas in Figure 1.

THE PRINCIPLE OF SUBDIVIDING OF THE ORIENTATION SPACE

The pole-points that correspond to orientations

$$g(+) = \{\varphi_1 = 1°, \phi = 59°, \varphi_2 = 56°\}$$
$$g(\bullet) = \{\varphi_1 = 3°, \phi = 61°, \varphi_2 = 53°\}$$

are given in the $\{0\,0\,1\}$ pole figure shown in Figure 1. All pole-points fall into the same units R_{656}, R_{897}, R_{919}, viz. the two orientations cannot be distinguished.

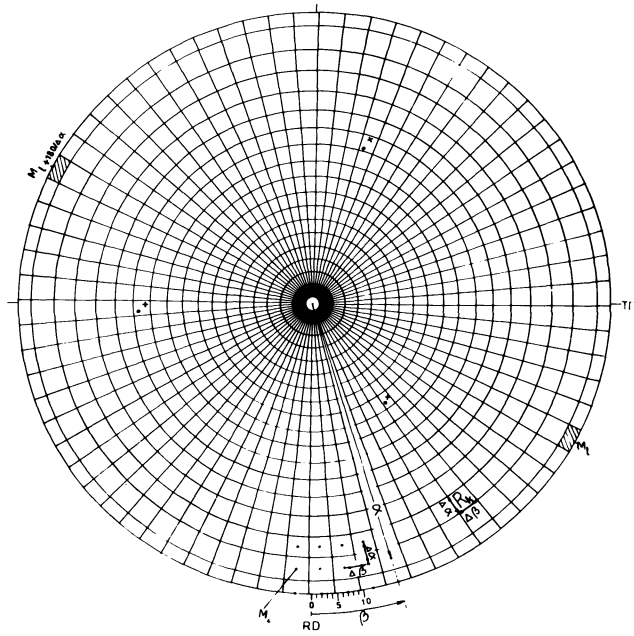

FIGURE 1 The division of a pole-figure to R_k units.

In order to be able to distinguish two orientations at least one pole-point of one orientation must occupy a different R_k unit as the pole-points of the other orientation. In this case two different combinations of measured data makes it possible, in principle, to distinguish the two orientations.

Using this rationale all experimentally indistinguishable orientations are lumped into orientation classes. The basis for distinction between various orientation classes is that corresponding pole-points fall into different combinations of pole-figure subdivisions R_k. The orientation classes are denoted by C_j with serial number j. It is assumed that the values of the orientation distribution function for all orientations contained by one class are equal.

The division of orientation space into classes can be done with reference to any pole-figure or for more than one pole figure. The number, size, and shape of the orientation classes clearly depend on the referenced pole-figures. The orientation classes are considered as a form of expression of character ($H\,K\,L$ indexes) of pole-figures and of measured pole-figure data structure.

We continue our study for one basic domain of the orientation space. One possible basic domain valid for cubic crystal structure is presented in Figure 2, which is going to be the subject of our investigation.

We intend to divide orientation space into classes using a $\Delta\varphi_1 = \Delta\phi = \Delta\varphi_2 = 1^\circ$ degree grid. This would yield in the basic domain of orientation

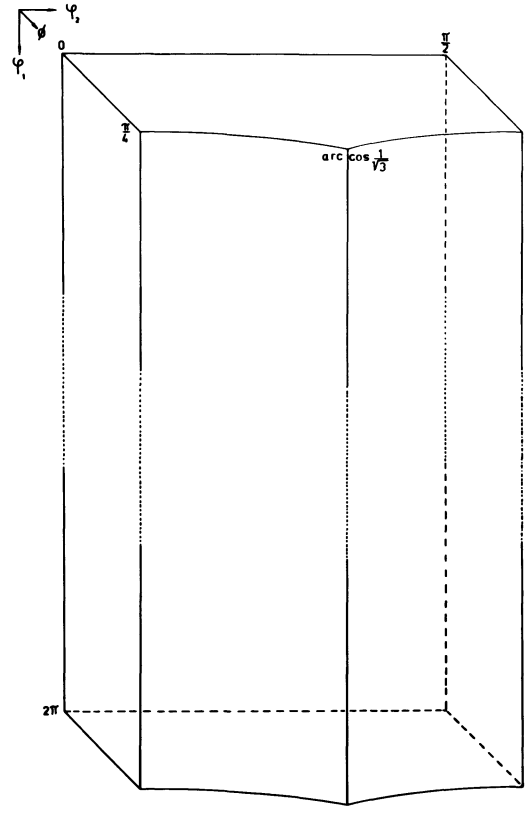

FIGURE 2 The chosen basic domain of orientation space.

space 1.5 million points to be considered. This number can be substantially decreased with the help of simple relationships.

THE $\{\varphi_1, \phi, \varphi_2\} \rightarrow (\alpha_i, \beta_i)$ RELATIONSHIP

Orientation $g = \{\varphi_1 \phi \varphi_2\}$ is defined in the pole-figure by poles $[H_i K_i L_i]$ of symmetrically equivalent $\{H\,K\,L\}$ crystallographic planes. The spherical coordinates (α_i, β_i) of the pole-points in the case of cubic crystals are given by[4]:

$$\cos \alpha_i = \frac{1}{P}\Big(H_i \sin \varphi_2 \sin \phi + K_i \cos \varphi_2 \sin \phi + L_i \cos \phi\Big) \tag{1}$$

$$\sin \alpha_i \cos \beta_i = \frac{1}{P}\Big[H_i(\cos \varphi_1 \cos \varphi_2 - \sin \varphi_1 \sin \varphi_2 \cos \phi) -$$

$$- K_i(\cos \varphi_1 \sin \varphi_2 + \sin \varphi_1 \cos \varphi_2 \cos \phi) + \\ + L_i \sin \varphi_1 \sin \phi \Big] \tag{2}$$

$$\sin \alpha_i \sin \beta_i = \frac{1}{P}\Big[H_i(\sin \varphi_1 \cos \varphi_2 + \cos \varphi_1 \sin \varphi_2 \cos \phi) - \\ - K_i(\sin \varphi_1 \sin \varphi_2 - \cos \varphi_1 \cos \varphi_2 \cos \phi) - \\ - L_i \cos \varphi_1 \sin \phi \Big] \tag{3}$$

$$\mathrm{P} = \sqrt{H^2 + K^2 + L^2} \tag{4}$$

With the help of equations (1), (2), (3) and (4) we may calculate the pole-figure units R_k that contain those pole-points which correspond to one given orientation.

REDUCTION OF ORIENTATIONS

For two orientation g' and g" that lie on a line parallel to the φ_1 axis the following relationships hold:

$$\mathrm{g}' = \{\varphi'_1, \phi, \varphi_2\} \rightarrow (\alpha_i, \beta'_i) \tag{5}$$

$$\mathrm{g}'' = \{\varphi''_1, \phi, \varphi_2\} \rightarrow (\alpha_i, \beta''_i = \beta'_i + (\varphi''_1 - \varphi'_1)) \tag{6}$$

This is interpreted as follows: A $(\varphi''_1 - \varphi'_1)$ translation in orientation space corresponds to $(\beta'' - \beta') = (\varphi''_1 - \varphi'_1)$ rotation of all corresponding pole-points around the pole-figure centre. This yields the following consequences:

1) Let us consider those orientations that give pole-points all in the same combination of R_k pole-figure units, defined as one C_j class of orientations, and perform a translation $\Delta\varphi_1 = m \cdot \Delta\beta$ of these orientations. Here $\Delta\beta$ is the angular step of pole-figure units, while $m = 1, 2, \ldots, 360°/\Delta\beta$. After translation the combination $\{R_k\}$ goes to $\{R_{k+m}\}$ combination. All serial numbers were increased uniformly by m, retaining the original structure of pole-points within each pole-figure unit. Hence it is sufficient to assign orientations into classes between sections $\varphi'_1 = m \cdot \Delta\beta$ and $\varphi''_1 = (m + 1)\ \Delta\beta$ in the basic domain of orientation space. After translations of the type $\Delta\varphi_1 = \Delta\beta$ congruent classes are obtained.

2) The assignment of orientations into classes in the orientation subspace between φ'_1 and φ''_1 sections is most efficiently performed along lines parallel to φ_1 axis. As a first step the coordinates $(\alpha_i^\circ, \beta_i^\circ)$ are calculated that correspond to the starting points of lines parallel to φ_1 axis. Assuming φ_1 is changed in $\Delta\varphi_1$ steps, then after n steps we have:

$$\alpha_i(n) = \alpha_i^\circ \quad \beta_i(n) = \beta_i^\circ + n \cdot \Delta\varphi_1 \tag{7}$$

The calculation of α_i° and β_i° is also simplified, provided the starting points are on the $\varphi_1' = 0°$ plane. Subspace A chosen for the simplest assignment of orientations into classes is shown in Figure 3.

The assignment of an arbitrary orientation into its class C_j is made as follows: The value of φ_1 is decreased in $\Delta\varphi_1 = \Delta\beta$ steps until orientation subspace A is reached. Assuming g_A in A was reached after l steps, and g_A belongs to class $C_j(g_A)$, then the serial number of the class to which orientation g was assigned is:

$$j(g) = j(g_A) + l \tag{8}$$

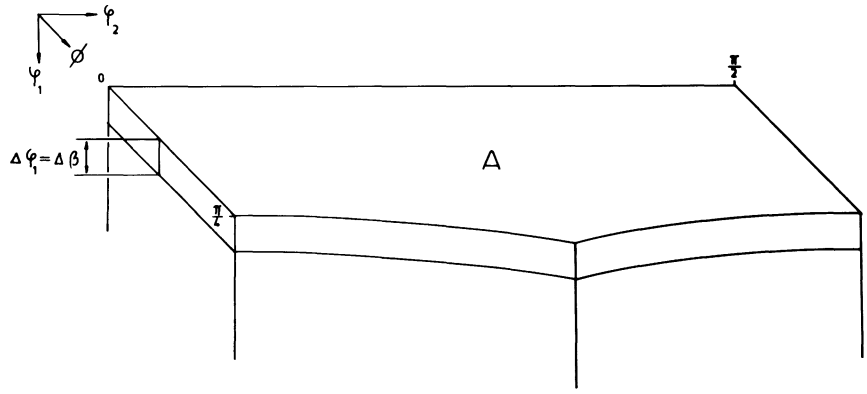

FIGURE 3 It is enough to allocate the orientations into classes in section A, with a height of $\Delta\varphi_1 = \Delta\beta$.

AN EXAMPLE

A $\{001\}$ type pole figure was divided up into $\Delta\alpha = \Delta\beta = 5°$ angular unit areas. The allocation of orientations to classes was made by using $\Delta\varphi_1 = \Delta\phi = \Delta\varphi_2 = 1°$ grid in section A of orientation space cf. Figure 3.

Section A can be divided into several subsections depending on the value of ϕ (Figure 4). Orientations belonging to the same A_i subsection have their [0 0 1] pole in the same R_k pole-figure unit. The result of the allocation procedure for subsections A_1, A_4, A_7, A_{11} and A_{12} is given in Figure 5. The allocation procedure was executed independently for each subsection. Darkened areas going continuously down in one subsection A_i shown in Figure 5, represent one C_j class. Identical numbers within one A_i refer to various $\phi =$ const. cross-cuts of the same class. Arrows in subsections A_{11} and A_{12} denote angular region located inside the basic orientation domain.

In any $\phi =$ const. cross-cut the point ($\varphi_1 = 2.5°$, $\varphi_2 = 45°$) is a symmetry

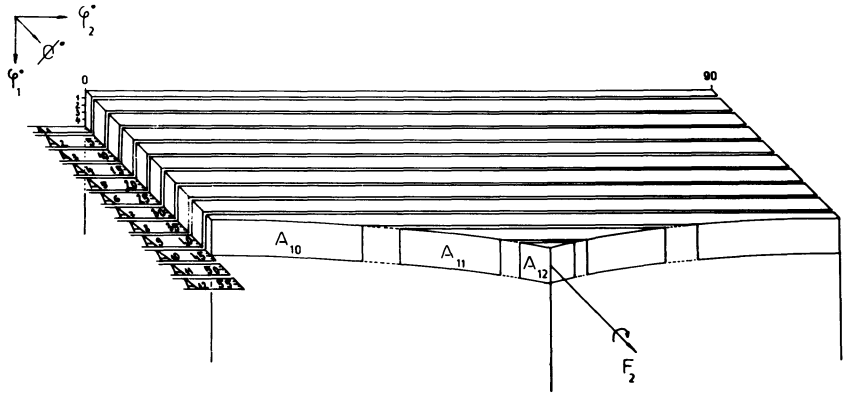

FIGURE 4 In the case of {0 0 1} pole-figure section A can be further divided to A_i subsections. Assignment to classes in subsections can first be made independently.

centre point for the allocation procedure (Figure 5). Axis F_2 generated by these points serves as a two-fold rotational axis of symmetry with respect to subsection A shown in Figure 4.

The average number of orientations allocated to one class of orientations is 30. For classes containing only one or two orientations the pole-points were located just at the boundary of pole-figure units. If such small classes are fused into their neighbouring classes taken in the φ_1 direction the boundary of the pole-figure units are modified as presented in Figure 6.

It is noted that even for the simplest case, using a $\Delta\alpha = \Delta\beta = 5°$ resolution of a {0 0 1} pole-figure one G_n orientation space unit used by vector-method contains an average number of 20 C_j classes.

THE VOLUME OF CLASSES

Let discrete orientations differ by $d\varphi_1$, $d\phi$, $d\varphi_2$ (Bunge, 1969). The volume of a unit element around $g = \{\varphi_1, \phi, \varphi_2\}$ is:

$$dg = \sin\phi \; d\phi \; d\varphi_1 \; d\varphi_2 \tag{9}$$

where K is the factor of normalization.
The volume of class C_j is made up from volumes of unit elements of discrete orientations allocated to class C_j.

$$\Delta V(C_j) = \sum_{g \in C_j} \sin\phi \; d\phi \; d\varphi_1 \; d\varphi_2 \tag{10}$$

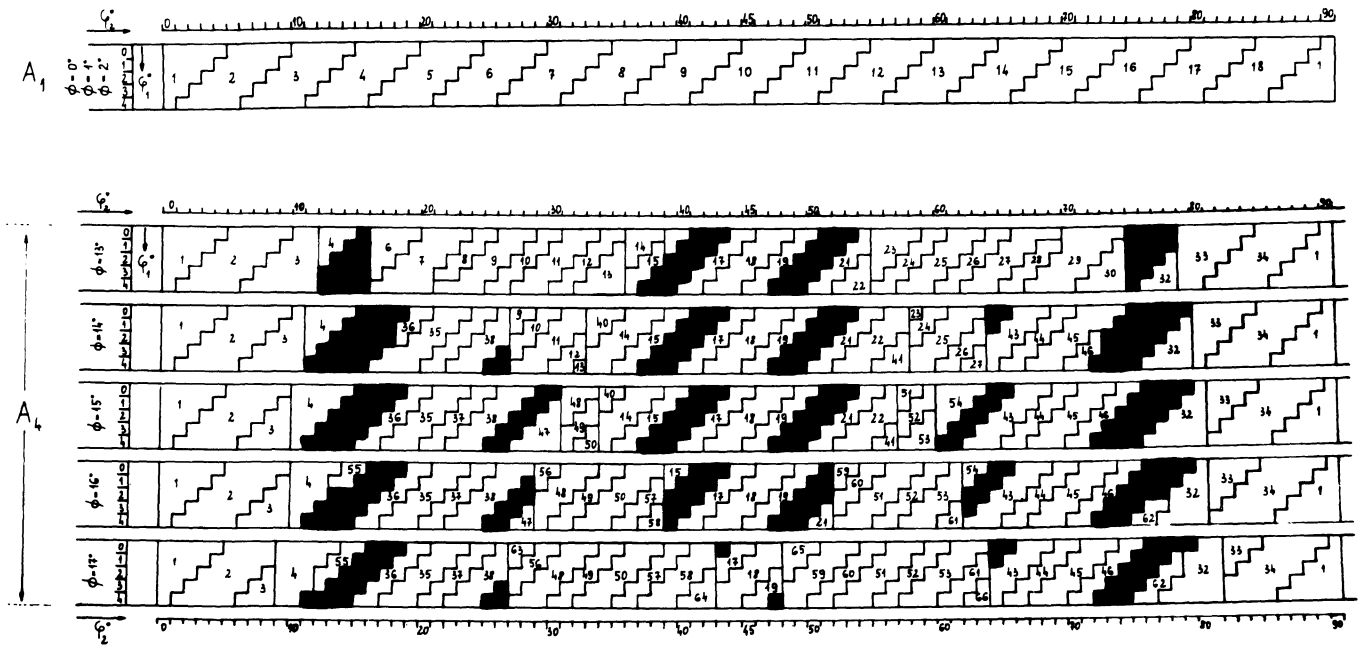

FIGURE 5 $\phi =$ const. cross-cuts of A_1, A_4, A_7, A_{11}, A_{12} subsections.

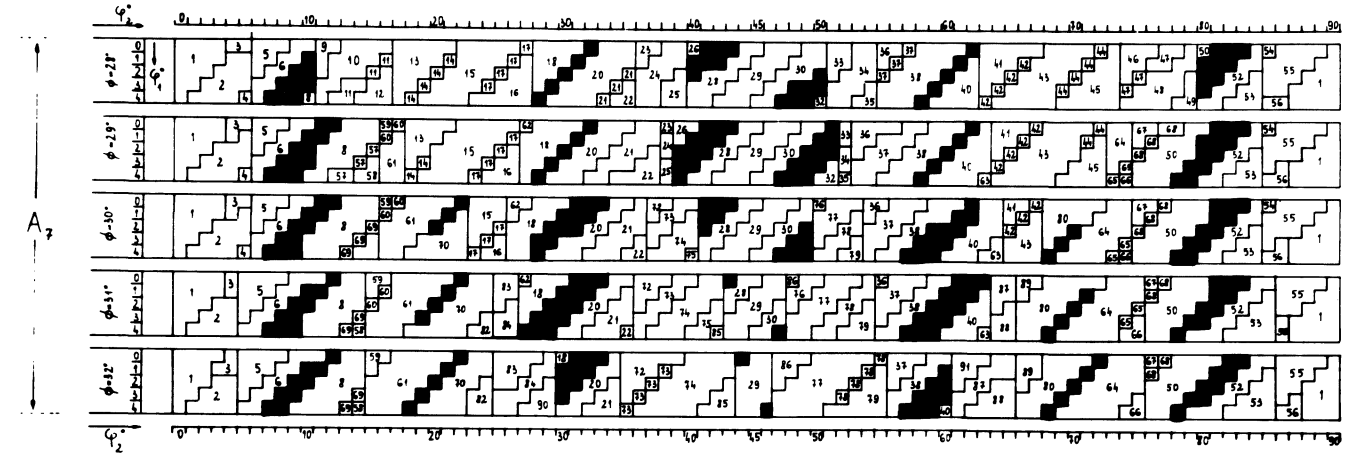
A7
φ=28°
φ=29°
φ=30°
φ=31°
φ=32°

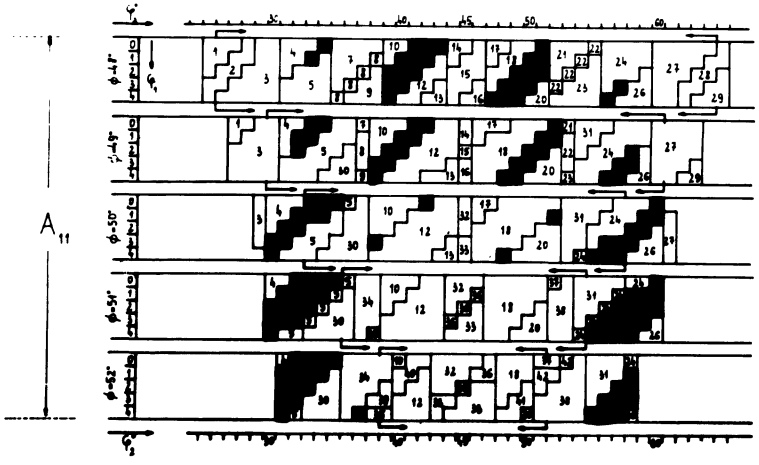
A11
φ=47°
φ=48°
φ=50°
φ=51°
φ=52°

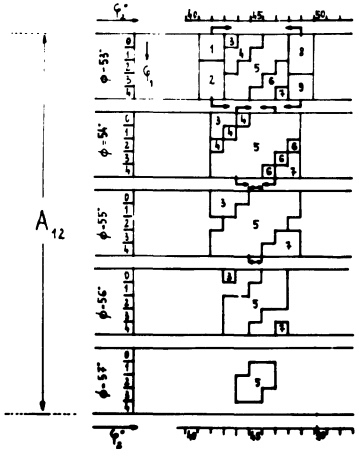
A12
φ=53°
φ=54°
φ=55°
φ=56°
φ=57°

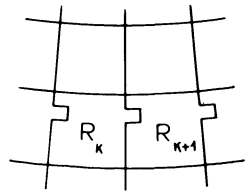

FIGURE 6 Modification of R_k unit boundaries when classes containing only one or two orientations are fused into larger classes.

It is sufficient to calculate the volume of classes in section A (Figure 3). The volume of all classes obtained by $\Delta\varphi_1 = \Delta\beta$ translation is the same.

THE RELATION OF CLASSES TO THE FUNDAMENTAL EQUATION

The pole-density D in an $\{H\,K\,L\}$ pole-figure is defined by the integral (Bunge, 1979):

$$D_{HKL}(\alpha, \beta) = \frac{1}{2\pi} \int\limits_{[HKL]\parallel(\alpha,\beta)} f(\varphi_1, \phi, \varphi_2)\, d\gamma \tag{11}$$

where γ is the angle of rotation around $[H\,K\,L]$ crystallographic direction. The integration includes all orientations, where $[H\,K\,L]$ is parallel to (α, β) direction.

D pole-density in real pole figures refers to a $(\Delta\alpha, \Delta\beta)$ area instead of a point. The fundamental integral equation is modified accordingly.

Let $D_{[H_iK_iL_i]}(R_k)$ be the pole-density of $[H_i\,K_i\,L_i]$ poles in the R_k pole-figure unit. Index i indicates that the measured pole-density is due to several equivalent poles.

Let us regard those classes of the basic orientation domain that have their $[H_i\,K_i\,L_i]$ poles in pole-figure unit R_k. These classes form a tube-shaped structure, that in the general case is cut at the boundary surfaces of the basic orientation domain. Hence the tube consists of several parts. The orientations that belong to one part have their $[H_1\,K_1\,L_1]$ pole in R_k, the orientations belonging to the other part have their $[H_2\,K_2\,L_2]$ pole in R_k and so on.

Treating a C_j class of the tube we may assume that orientation g_1 in class C_j has its $[H_i\,K_i\,L_i]$ pole (i is given) at point (α_1, β_1) in R_k. Rotating g_1 around $[H_i\,K_i\,L_i]$ in the range of $\Delta\gamma_1$ other orientations in C_j that have their $[H_i\,K_i\,L_i]$ pole at (α_1, β_1) are generated. The contribution of C_j to the pole-density at point (α_1, β_1) is proportional to

$$\int\limits_{\Delta\gamma 1} f(C_j)\, d\gamma \text{ or to } f(C_j) \int\limits_{\Delta\gamma 1} \{\varphi_1, \phi, \varphi_2\}\, d\gamma \tag{12}$$

($f(g)$ within C_j is considered to be constant). The same procedure is repeated to all g_2, g_3, ... orientations in C_j that have their $[H_i K_i L_i]$ pole in R_k at points (α_2, β_2), (α_3, β_3), ... Respective $\Delta\gamma_2$, $\Delta\gamma_3$, ... rotations finally include all orientations in C_j. The whole contribution of C_j to pole-density in R_k is proportional to the expression

$$\Delta D_{C_j}(R_k) \sim f(C_j).\left(\int_{\substack{[H_i K_i L_i]\parallel(\alpha_1, \beta_1)\\(\Delta\gamma_1)}} \{\varphi_1, \phi, \varphi_2\}\, d\gamma + \int_{\substack{[H_i K_i L_i]\parallel(\alpha_2, \beta_2)\\(\Delta\gamma_2)}} \{\varphi_1, \phi, \varphi_2\}\, d\gamma + \ldots\right) \tag{13}$$

The term in parantheses is equal to the volume of the orientations in C_j, denoted by $\Delta V(C_j)$:

$$\Delta D_{C_j}(R_k) \sim f(C_j)\cdot\Delta V(C_j) \tag{14}$$

If this procedure is executed in all classes of the tube taking into account the normalization conditions of the $f(g)$ and that of the pole-density, the modified form of the fundamental equation will be:

$$D(R_k) = \frac{1}{V_T(R_k)} \sum_{C_j \subset T(R_k)} f(C_j)\cdot\Delta V(C_j) \tag{15}$$

Here $V_T(R_k)$ is the volume of the tube $T(R_k)$ allocated to pole-figure unit R_k, that consists of the sum of the volumes of C_j classes in the tube. The tube of orientations as considered in the present discussion is termed an integration tube.

PROBABILISTIC INTERPRETATION OF THE FUNDAMENTAL EQUATION

The orientation distribution function $f(g)$ is defined by equation $\Delta V/V = f(g)\, dg$, where ΔV is the volume of the sample having orientations in the range from g to Δg and V is the volume of the whole sample. The orientation can be considered as a probability variable with possible values in the basic domain G of orientation space. Provided the volume of basic domain is denoted by $V(G)$, while the volume of C_j classes by $\Delta V(C_j)$, the product of

$$\frac{1}{V(G)}\cdot f(C_j)\cdot\Delta V(C_j) \tag{16}$$

expresses the probability to have an orientation in class C_j. This probability can be denoted by $P(g \in C_j)$.

Dividing both sides of Eq. (15) by the volume of the basic domain of orientation space, after rearranging we have

$$D(R_k)\cdot\frac{V_T(R_k)}{V(G)} = \frac{1}{V(G)}\sum_{C_j\subset T(R_k)} f(C_j)\cdot\Delta V(C_j) \tag{17}$$

The right-hand side of Eq. (17) expresses the probability to have an orientation in $T(R_k)$ integration tube belonging to R_k. The left-hand side shows how this can be calculated with the help measured pole-density and the relative volume of integration tube. This probability can be denoted by $P(g\in T(R_k))$.

CONCLUSIONS

Given a specified division of the pole-figure, the division of orientation space can be determined without using any arbitrary assumption. This division provides the natural structure of orientation space. The values of the orientation distribution function are obtained using experimental data with reference to data structure and orientation space structure. A specified combination of measured data is allocated to one unit (C_j class) of the orientation space structure. While the value of orientation distribution function assigned to a particular structure unit is based on these premises, the fundamental equation must also be satisfied.

Acknowledgements

Thanks are due to Dr. J. Pospiech for stimulating discussions. S. Szabó and K. Pawlik has provided valuable help in the calculation of the example. The assistance of Dr. P. Gangli in the final formulation of the paper is also gratefully acknowledged.

References

Bunge, H. J. Mathematische Methoden der Texturanalyse. Akademie-Verlag, Berlin (1969).
Bunge, H. J. General Outline. Vol. 1, Summer School, Metz (1979).
Hansen, J., Pospiech, J. and Lucke, K. Tables for Texture Analysis of Cubic Crystals. Springer-Verlag, Berlin (1978).
Mitchell, C. M. and Rowland, J. F. *Acta Metall.* **2**, 559 (1954).
Ruer, D. and Baro, R. *J. Appl. Cryst.* **10**, 458 (1977).
Ruer, D. The Vector Method. Vol. 14, Summer School, Metz (1979).
Williams, R. O. *J. Appl. Phys.* **32**, 4329 (1968).