Magnetic and Electrical Separation, Vol. 9, pp. 1–25
Reprints available directly from the publisher
Photocopying permitted by license only

FERROFLUIDS – MAGNETISABLE LIQUIDS AND THEIR APPLICATION IN DENSITY SEPARATION

STEFAN ODENBACH

ZARM, University of Bremen, Am Fallturm, 28359 Bremen, Germany

(Received 30 December 1997; Accepted 23 January 1998)

Stable suspensions of magnetic particles exhibit specific features making them an innovative liquid material for numerous applications as well as for basic research. In particular ferrofluids can be used for density separation of non-magnetic materials immersed in the liquid under the influence of magnetic fields. In this article the basic properties and applications of ferrofluids will be reviewed, and the principles of magnetic density separation will be discussed on the basis of the available literature. In addition we will try to show the possibility and problems of a commercial use of this technique.

Keywords: Ferrofluid; Magnetohydrostatic separation; Levitation; Rotational viscosity

INTRODUCTION

In the early 60s a lot of effort has been spent on the development of a liquid material which can be strongly influenced by moderate magnetic fields. Such a material, enabling the control of its flow and physical properties over a wide range by means of a controllable magnetic force, was expected to give rise to numerous new applications. All known ferromagnetic materials have a Curie point well below their melting temperature. Thus, they lose their ferromagnetic properties before becoming liquid. The only exception, undercooled melts of Co–Pd alloys, found to show a magnetic phase transition in 1996 [1,2], is of no technical importance concerning magnetic field controlled flows and related applications. Solutions of paramagnetic salt exhibit force densities in the order of 50 N/m^3 in magnetic fields of about 40 kA/m with

gradients around 10^6 A/m^2. These values for the field strength and its gradient are typical for controllable magnetic fields produced with coils. The mentioned force density on paramagnetic salt solutions is about three orders of magnitude smaller than the gravitational force density. Thus they are also not applicable for technical use. Therefore a completely new class of materials had to be developed to meet the necessities of the prospected use of a magnetic fluid. The final breakthrough was made by S. Pappell's success in producing stable suspensions of magnetic nanoparticles in appropriate carrier liquids [3]. These suspensions show liquid behavior coupled with superparamagnetic properties. That means that moderate magnetic fields can exhibit magnetic forces to the liquid, which are comparable to gravitational forces.

Intense efforts undertaken shortly after the discovery of a method of preparation of ferrofluids – as these suspensions are commonly called – forced the development of fluids exhibiting longtime colloidal stability and reproducible properties. Parallel to further development and improvement of the liquids themselves, applications have been published, some of them gaining high commercial importance.

In the following we will first look at the composition and stability requirements of ferrofluids, as well as their most important magnetic properties. Afterwards some of their applications, having importance in everyday life, will be presented to illustrate the wide range of applicability of these substances. Finally the use of ferrofluids for sorting of non-magnetic materials by density will be discussed in some detail, showing the basic principle, as well as the possibilities of technical use of this method.

COMPOSITION AND STABILITY REQUIREMENTS

Commercially available ferrofluids contain magnetic nanoparticles with a mean diameter of about 10 nm. To ensure colloidal stability of the liquid, thermal motion of the magnetic particles has to avoid their sedimentation in the gravitational field and in magnetic field gradients, as well as agglomeration due to magnetic interaction. For particles with a diameter of about 10 nm one can easily calculate that thermal energy of the particles kT (k denoting Boltzmann's constant and

T the absolute temperature) at room temperature is comparable to their energy in the gravitational field.

$$E_{\text{grav}} = \Delta\rho V g h, \tag{1}$$

($\Delta\rho$ is the density difference between particles and carrier liquid, V the volume of a particle, g gravitational acceleration and h the typical height of the fluid container), their energy in a moderate magnetic field H

$$|E_{\text{mag}}| = \mu_0 M_0 V H \tag{2}$$

(μ_0 denotes the magnetic constant and M_0 the spontaneous magnetization of the particle's magnetic material) as well as the dipole–dipole interaction energy of two identical particles in contact,

$$E_{\text{dip}} = \frac{\mu_0 M_0^2}{12} V. \tag{3}$$

Nevertheless, colloidal stability of bare magnetic particles of this size in a carrier liquid cannot be guaranteed, since agglomeration due to van-der Waals attraction will occur as soon as particles come into contact. The van-der Waals interaction energy for identical spherical particles of diameter d can be written in the form

$$E_{\text{vdW}} = -\frac{A}{6}\left[\frac{2}{l^2+4l} + \frac{2}{(l+2)^2} + \ln\left(\frac{l^2+4l}{(l+2)^2}\right)\right]. \tag{4}$$

Here $l = 2s/d$ is the distance s between the particles normalized to their diameter d, while A denotes the Hamaker constant, which is of the order 10^{-19} Nm for magnetite in water. One can show, that the van-der Waals interaction energy diverges for vanishing distance between the particles with l^{-1}. Thus, the thermal energy cannot redispense particles being in contact. To avoid irreversible agglomeration of the particles, they have to be prevented from coming into contact. This is usually done by means of a surfactant layer consisting of long chain molecules with a polar head and an unpolar tail (see Fig. 1). The head is attached to the particle, while the tail reaches into the carrier liquid. The

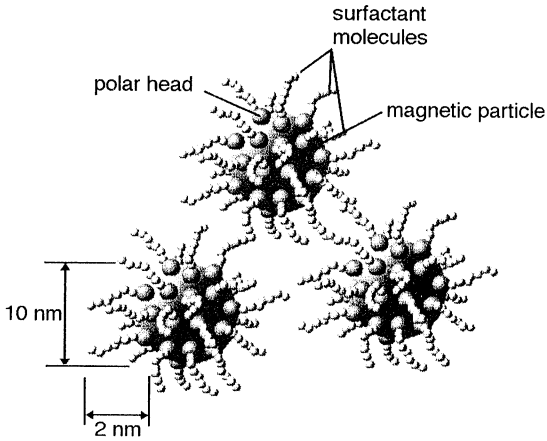

FIGURE 1 Schematic representation of the coated magnetic particles in a ferrofluid. The size of the surfactant molecules has not been given in scale, to make the figure clearer.

molecules have to be chosen in such a way, that the dielectric properties of the tails match those of the carrier liquid. In this case the Hamaker constant describing the van-der Waals interaction between the surfactant molecules becomes zero and no agglomeration between the surfactant molecules will occur. Thus two surfacted particles coming close to each other will just experience steric repulsion resulting from the reduction of the configuration room of the surfactant molecules. It can be shown, that a surfactant layer of 2 nm thickness yields a steric repulsion strong enough to avoid direct contact between the magnetic particles and thus prevents interparticle agglomeration.

Modern ferrofluids contain usually magnetite (Fe_3O_4) as magnetic component. The carrier liquids can be different oils, water, kerosene, heptane or some esters. The surfactant is always chosen to match the dielectric properties of the carrier liquid. As an example acidic acid can be used for magnetite in water, but the composition of surfactants in commercial ferrofluids is a secret of the producers. The volume concentration of the magnetic component is usually in the order of 5–15 vol.%.

Such suspensions of coated magnetic particles in a carrier liquid are commonly produced by chemical coprecipitation. Khalafalla and

Reimers [4] coprecipitated magnetite from the reaction

$$FeCl_2 + 2FeCl_3 + 8NaOH \rightarrow Fe_3O_4 + 8NaCl + 4H_2O \qquad (5)$$

and boiled the coprecipitate in a mixture of petroleum and oleic acid. The petroleum was used as a carrier liquid, while the oleic acid served as a surfactant for the particles. The boiling in presence of the carrier fluid and the surfactant prevented the agglomeration of the particles due to van-der Waals interaction. In a magnetic field gradient the magnetic fluid has to be separated from the salt solution. Finally the resulting ferrofluid could be obtained by diluting or concentrating the magnetic liquid filtrate.

In the mean time numerous techniques have been developed to prepare ferrofluids in other carrier liquids [5–7], with different magnetic material [8–10] and with other kind of stabilizing layers [11,12]. Nevertheless most of them are based on chemical precipitation processes like the one described above. The resulting fluids contain a polydisperse magnetic fraction with particle sizes between approximately 3 and 20 nm.

MAGNETIC AND VISCOUS PROPERTIES

The most important feature of magnetic fluids is the combination of normal liquid behavior with superparamagnetic properties. The magnetic particles, having a mean diameter of about 10 nm, can be assumed to be magnetic single domain particles [13]. Thus, their alignment with an external magnetic field will be determined by a counteraction of thermal energy with the magnetic energy of the particle – which can be described as a dipole – in the field. Therefore the magnetization M of a ferrofluid follows the well known Langevin law

$$M = M_s(\mathrm{ctgh}\,\alpha - 1/\alpha), \quad \alpha = \frac{\mu_0 m H}{kT}, \qquad (6)$$

where M_s denotes the saturation magnetization of the fluid and m the magnetic moment of a single particle. For small values of α, that means for weak magnetic fields, one can approximate the expression

for M in (6) by

$$M \approx M_s \frac{1}{3}\frac{\mu_0 m H}{kT} = \frac{M_s^2}{3}\frac{\mu_0 \pi \bar{d}^3}{6kT} H = \chi H \tag{7}$$

with the mean diameter of the particles $\bar{d}$ and the initial susceptibility χ of the fluid. This approximation is valid up to $H \approx 15\,\mathrm{kA/m}$ in a fluid with saturation magnetization of about $M_s = 32\,\mathrm{kA/m}$ containing particles with mean diameter $\bar{d} = 10\mathrm{nm}$.

Using Eqs. (6) and (7) one can obtain important information about the composition of a ferrofluid from a measured magnetization curve like that shown in Fig. 2. First of all one can determine the saturation magnetization of the fluid by extrapolation to $H \to \infty$. Using $M_s = \phi M_0$ one can deduce the volume concentration ϕ if the spontaneous magnetization of the particle's magnetic material is known. For magnetite the spontaneous magnetization equals $M_0 = 4.5 \cdot 10^5\,\mathrm{A/m}$ [13]. In addition, using the information on saturation magnetization, the initial susceptibility provides the information on the mean size of the particles using Eq. (7).

As mentioned before, the particles usually show a broad size distribution. Therefore, the magnetization curve is not completely described by a Langevin function using a mean particle diameter. The shape of the magnetization curve for relatively weak magnetic fields is strongly influenced by the particle size. Therefore it contains essential information on the particle size distribution. Using regularization methods [14,15] one can calculate a discrete particle size distribution from a measured magnetization curve, as shown in Fig. 2. This

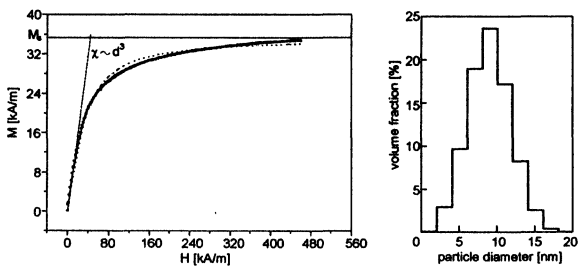

FIGURE 2 A measured magnetization curve with a fit from a single particle size model (dashed line) and with an approximation using the particle size distribution on the right side, obtained from the curve by a regularization technique [16].

procedure of determination of the particle size distribution is advantageous compared with the usual electron microscopy techniques, since it measures the fluid as it is, that means without any preparation, that may change the particle sizes due to irreversible agglomeration or other phenomena in an unknown way. In addition it provides the real magnetic information and protects one from mistakes due to influences from non-magnetic particles formed during the preparation process.

The relaxation of magnetization in a ferrofluid is determined by two different processes. On the one hand the magnetization can relax by Brownian motion of the particles in the fluid, on the other hand the magnetic moment can relax inside the particle without a movement of the particle itself – the so-called Néel relaxation process [17]. The Brownian relaxation time is given by

$$\tau_B = \frac{3\tilde{V}\eta}{kT}, \tag{8}$$

where $\tilde{V}$ denotes the volume of the particles including the surfactant layer and η the dynamic viscosity of the liquid. For the Néel relaxation time it holds

$$\tau_N = f_0^{-1} \exp\left(K_1 V/kT\right) \tag{9}$$

with the crystal anisotropy constant of the magnetic material K_1 and a relaxation frequency f_0 that is given by the Larmor frequency of the magnetization vector in the anisotropy field of the particle. For the standard ferrofluid described in the Appendix, the Brownian relaxation time will be about $\tau_B = 1.1 \cdot 10^{-5}$ s, while the Néel relaxation will take place in $\tau_N = 2.8 \cdot 10^{-10}$ s (for 10 nm particles). One can easily see, that the Néel process will dominate for small particles, while the relaxation will be due to Brownian particle motion for large ones. Particles relaxing by the latter process are called magnetically hard. For magnetite the transition size between both processes is about 20 nm.

The possibility to exert strong forces on ferrofluids is due to the high initial susceptibility which is in the order of $\chi \approx 1$ compared to $\chi \approx 10^{-3}$ for paramagnetic salt solutions. This means, that the magnetization of the fluid is about three orders of magnitude higher at weak magnetic fields, than it is known from usual paramagnetic liquids. Thus one can

easily calculate, that the magnetic force density

$$|F_{\text{mag}}| = \mu_0 M \nabla H \tag{10}$$

is comparable to the gravitational force for a standard ferrofluid (see Appendix) in moderate magnetic field gradients. For example a magnetic field of about $H = 20\,\text{kA/m}$ with a gradient of about $\nabla H = 7 \cdot 10^5\,\text{A/m}^2$ as it is typically present some 5 cm from a pole of an electromagnet (see Fig. 3) will exert a force density of about $14\,\text{kN/m}^3$ to the standard fluid, while the gravitational force density on the same fluid is approximately $13\,\text{kN/m}^3$. Thus the magnetic field is able to produce a force strong enough to lift the fluid out of the pool towards the pole of the magnet as shown in the photograph in Fig. 3.

This magnetic force enables the control of the flow of magnetic fluids. In addition it gives rise to significant changes in their physical properties. Within this article we will not discuss in detail the influence of magnetic fields on the flow of magnetic fluids. In particular we will not use or deduce any of the basic equations of ferrohydrodynamics, since this would exceed the frame of this review – the interested reader is referred to the monographs of Rosensweig [18] and Blums [19] and the literature cited therein. In the following we will only show the consequences of the magnetic influence with respect to applications and to the change of physical properties of the fluids.

The most famous property is the change of viscosity in ferrofluids due to the action of a magnetic field. Suggesting, that the fluid is subjected to a shear flow with vorticity $\vec{\Omega}$, a mechanical torque will be exerted on the particles due to viscous friction at the solid liquid interface. This torque will cause the particle to rotate (see Fig. 4). It is assumed in the following, that the magnetic moment is fixed in the particle, i.e. the Brownian process determines the relaxation of magnetization in the fluid. If, in this case, a magnetic field is applied to the fluid under shear, its interaction with the magnetic moment of the particles will give rise to a magnetic torque trying to align the moment – and thus the particle – with the magnetic field direction. If the magnetic field is parallel to the vorticity of the flow, no hindrance of the rotation of the particle will occur (see Fig. 4). In the opposite case, i.e. for $\vec{H} \perp \vec{\Omega}$, the viscous flow will twist the magnetic moment of the particles out of the field direction. This will create a magnetic torque

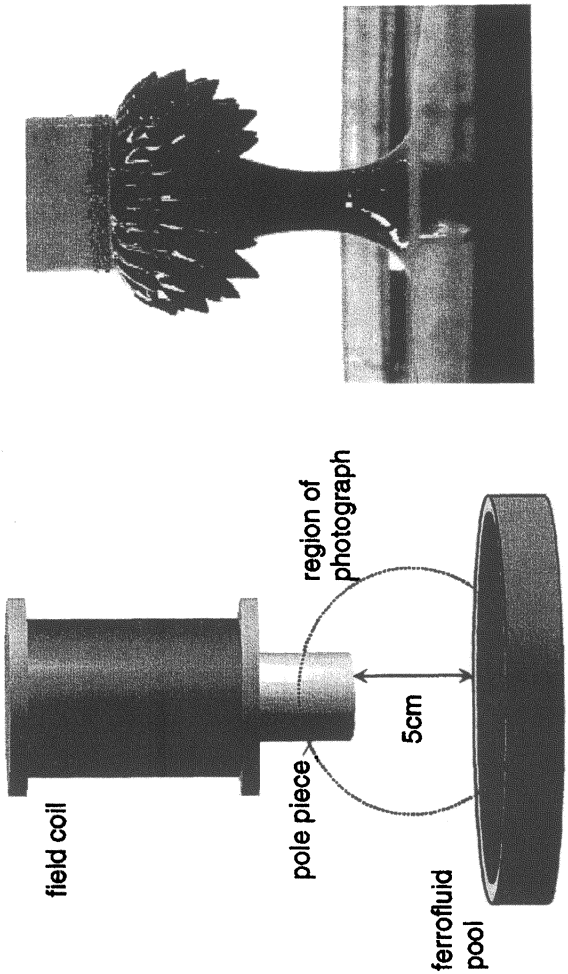

FIGURE 3 The attraction of a magnetic fluid by a magnetic field. The coil at the top of the arrangement provides a magnetic field of about 20 kA/m with a gradient of about $7 \cdot 10^5$ A/m^2 at the top of the fluid pool. This gives rise to a force strong enough to lift the fluid against gravitational forces (left: schematic sketch; right: photography with applied magnetic field).

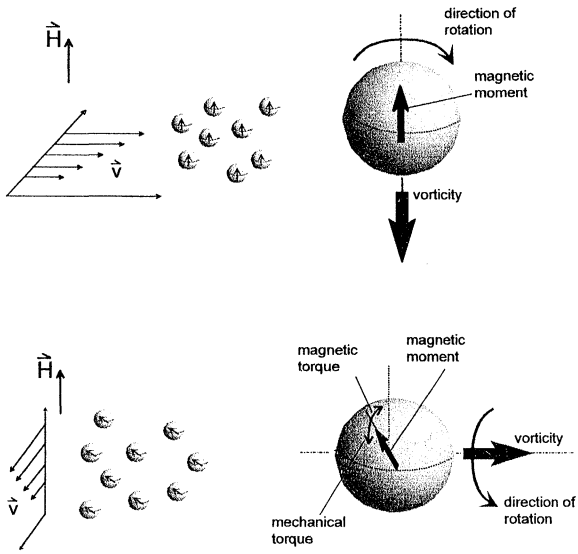

FIGURE 4 The origin of rotational viscosity. Explanations are given in the text.

counterdirected to the mechanical torque (see Fig. 4). This magnetic torque hinders the free rotation of the particles, and produces an increase of the fluid's viscosity. This increase is anisotropic, since it depends on the mutual orientation of vorticity and magnetic field. The phenomenon, called rotational viscosity, was theoretically investigated by Shliomis [20] in 1972. He found, that for non-interacting particles of spherical shape, the viscosity increase $\eta_r = \eta_{(H)} - \eta_{(H=0)}$ can be written in the form

$$\eta_r = \frac{1}{2}\Phi'\eta_{(H=0)}\sin^2(\beta)\frac{\alpha - \tanh(\alpha)}{\alpha + \tanh(\alpha)}, \tag{11}$$

where Φ' denotes the volume concentration of the magnetic particles including their surfactant and β the mean angle between vorticity and magnetic field direction. The effect of rotational viscosity has first been observed in highly diluted magnetic suspensions by McTague [21]. In this case good agreement has been found with respect to the theoretical model. Later on experiments were performed using commercial, concentrated ferrofluids [22–24]. In this case, strong quantitative differences between experiment and theoretical prediction (11) was observed

(see Fig. 5). These discrepancies can be related to the formation of agglomerates of magnetic particles in the fluid, which first of all would explain the strong rotational viscosity and which would be magnetically hard. This second point overcomes the problem, that single magnetite particles of 10 nm diameter would relax by the Néel relaxation process, and a fluid containing such particles should therefore not show any rotational viscosity. Such agglomerates are usually formed during the preparation process [25]. In any way Fig. 5 shows clearly, that the magnetoviscous effect in a fluid of reasonable concentration of magnetic particles is strong enough to be necessarily considered in investigations, and in the design of applications of magnetic fluids.

Recently some effort has been made in the investigation of viscoelastic effects in suspensions of magnetic particles. Besides results on magnetorheological fluids (MR) containing large particles of about 1 μm in diameter [26] and on nanosized MR-fluids with particles of about 30 nm in diameter [12], recently viscoelastic effects have been observed also in stable conventional ferrofluids [27]. Such fluids have the advantage of long-term stability against sedimentation, so that systematic investigations of the viscoelastic effects and their microscopic origin became possible.

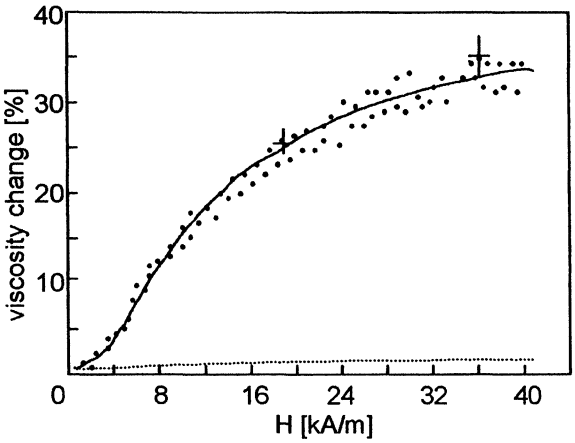

FIGURE 5 Rotational viscosity of a concentrated commercial ferrofluid. The dashed line represents the theoretical prediction calculated for the fluid used in the experiments. The full line is the best fit to the data. This fit strengthens the assumption, that agglomerates of magnetic particles determine the fluid's behavior.

SOME APPLICATIONS OF FERROFLUIDS

The possibility to influence ferrofluids with moderate magnetic fields gave rise to numerous patents for applications of this kind of liquid materials. Some of them, which gained commercial importance will be described now, together with some recent application ideas to illustrate the application potential of magnetic fluids.

The most famous use of ferrofluids is their utilization in sealings for rotating shafts. Conventionally such sealings are made by oil seal rings or other mechanical devices. Such sealings have strong friction consuming energy and producing heat. The increased energy consumption as well as the heat production are crucial for many devices needing rotary feedthroughs. Thus, one of the first realized applications was the ferrofluid sealing, easily standing against pressure differences of about 1 bar and having the friction of a liquid in a small gap. As is seen from Fig. 6, the rotating shaft is surrounded by a circular permanent magnet. A drop of ferrofluid is placed into the gap between the magnet and the rotating shaft, which is made from highly permeable material. Due to the strong magnetic field gradient in this region a strong force is exerted on the fluid, fixing it in the gap. It can easily be shown [18], that pressure differences of about 1 bar can be sealed with a single stage sealing of this kind. The friction of the seal is negligible compared to that of oil seal rings or comparable systems. Higher pressure differences can be sealed by an improvement of the magnetic poles and a reduction of the gap width [28] or by use of multistage sealings [29]. Due to the

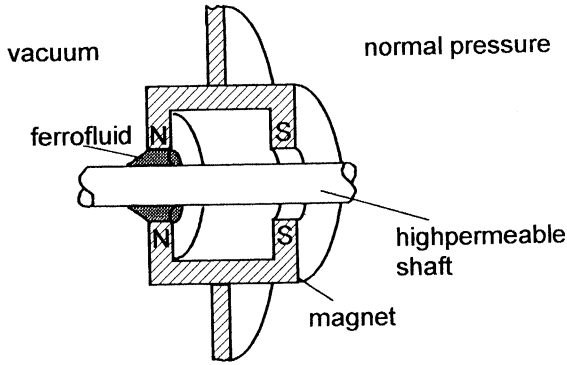

FIGURE 6 Diagram of a ferrofluid sealing of a rotating shaft.

development of ferrofluids which are highly stable even in strong magnetic field gradients, such sealings could be adapted for applications with high requirements concerning lifetime of the used components. Nowadays they are used in numerous devices like vacuum feedthroughs or hard disk drives.

The most important application as far as the total volume of ferrofluid produced is concerned is – at the moment – the cooling and damping of loudspeakers. In this particular case the voice coil of a loudspeaker is immersed in a ferrofluid, held in the gap of the permanent magnet by the magnetic forces present here (see Fig. 7). Even at high amplitudes of the membrane the magnetic forces are strong enough to avoid transport of fluid out of the gap. The fluid increases the heat transfer from the coil by a factor of approximately 3 – making high power loudspeakers much more reliable. In addition, the alternating magnetic field of the coil produces time-dependent changes of the viscosity of the fluid, which give rise to dynamic damping of the loudspeaker [18]. Both effects together improve the overall performance of loudspeakers in such way, that nowadays most speakers for high quality HIFI systems, car audio systems and high power applications use ferrofluids for cooling and damping purposes. This application forced intense efforts in the development of ferrofluids, since the liquids used in high power loudspeakers have to be stable even at high temperatures of about 120°C. Thus many carrier liquids and surfactants used in the early times of ferrofluid research were not suitable here.

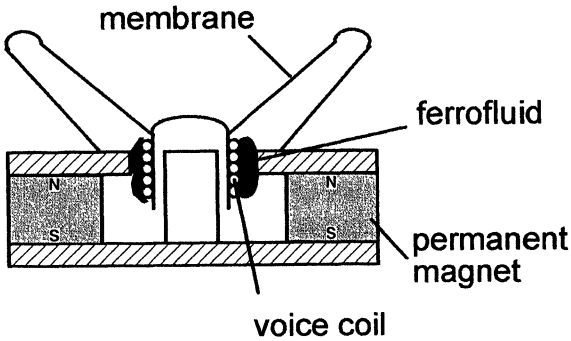

FIGURE 7 The damping and cooling of voice coils in loudspeakers by means of ferrofluids.

Other applications, e.g. in medicine, are at present in development. For example, drugs can be attached to the surfactant molecules. After injection of the drug-carrying fluid into a blood vessel, it can be concentrated at a certain position by applying a strong magnetic field gradient [31]. In this way the effect of the drug can be localized in the body e.g. near an organ needing treatment, reducing unwanted side effects. Another upcoming therapy technique is the use of ferrofluids for cancer treatment by hyperthermia. The fluid particles are marked with tracer substances that are enriched in the tumor tissue. By applying an alternating magnetic field, the energy losses due to change of magnetization in the particles can be used to heat up the tissue [32]. Thus, the tumor itself can be destroyed by a technique avoiding side effects to other organs. Most of the medical applications are at the moment in a preclinical test phase, but they are expected to become usual treatment techniques soon. The most important problem that will have to be solved here, is the synthesis of biocompatible magnetic liquids.

The above mentioned examples of applications show only a small cut from the wide field of use of ferrofluids. A more detailed discussion would exceed the frame of this article. Therefore the interested reader can refer to [33] for more information on various kinds of applications of ferrofluids.

LEVITATION OF NON-MAGNETIC PARTICLES IN A FERROFLUID

Another outstanding effect, that is observed in magnetic fluids, is the levitation of non-magnetic bodies in a ferrofluid under the influence of an inhomogeneous magnetic field. As is well known, a magnetic body cannot be held in equilibrium by a uniform magnetic field alone. Ferrofluids under the influence of appropriate inhomogeneous magnetic fields provide a possibility to obtain a stable levitation of non-magnetic bodies in the liquid. For a basic insight into this phenomenon one can consider a closed container filled with magnetic fluid. If the fluid is under the influence of the magnetic field of two opposed magnetic poles having equal magnetic field strength, as shown in Fig. 8, the field distribution has a minimum with $H=0$ in the center of the

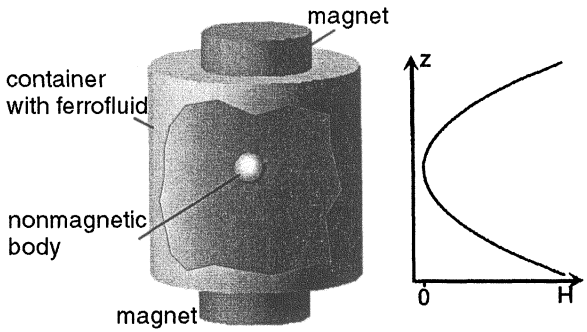

FIGURE 8 The principle of magnetic levitation of a non-magnetic body in a ferrofluid under the influence of non-homogeneous magnetic fields.

fluid sample. In his deduction of the magnetic stress tensor for a ferrofluid under influence of magnetic fields from the force density in the fluid calculated by Cowley and Rosensweig [34], Rosensweig [18] showed, that the pressure in a magnetic fluid changes with the strength of the applied magnetic field. The pressure rises with increasing field strength. Thus, in the fluid considered in our example, we have a pressure minimum in the center of the container. Therefore – neglecting gravitational effects – a non-magnetic body immersed in the fluid will be forced to the center of the container, i.e. into the region of minimum pressure. Any disturbance from this equilibrium position will give rise to a force pulling the body back to this minimum.

On the basis of the phenomenon of pressure variation in a magnetic fluid under influence of a magnetic field it becomes possible to levitate non-magnetic bodies at different heights in a ferrofluid under the influence of the magnetic field gradient. To understand this principle of magnetic density separation in a ferrofluid, one can calculate the magnetic force F_m on a non-magnetic body in a ferrofluid, which is given, in the strong magnetic field limit, by

$$F_m = -\mu_0 M V \nabla H, \tag{12}$$

where M is the magnetization of the fluid, V the volume of the non-magnetic body and ∇H the magnetic field gradient. This force counteracts the net gravitational force F_g on the non-magnetic body in the

liquid. Thus the body will be stable levitated when [18]

$$F_g + F_m = -(\rho - \rho')gV + F_m = 0, \tag{13}$$

where ρ and ρ' denote the density of the fluid and of the body respectively, while g is the gravitational acceleration. In addition, each displacement of the non-magnetic body from the position where Eq. (13) is fulfilled must give rise to a repulsive force driving the body back to the equilibrium point. From Eqs. (12) and (13) one sees immediately, that the condition of stable levitation is independent from the volume of the test body and it must be

$$(\rho - \rho')g = -\mu_0 M \nabla H. \tag{14}$$

From this one can define the apparent density of the liquid ρ_{app} which is given by

$$\rho_{app} = \rho + \frac{\mu_0 M \nabla H}{g}. \tag{15}$$

One should note, that this apparent density does not describe a real change in density of the fluid. It is just a tool to describe the levitation of a non-magnetic body in the fluid under influence of a magnetic field gradient using common concepts. As an example, one can calculate, that a magnetic field gradient of about $1.5 \cdot 10^6\,\mathrm{A/m^2}$ will be able to float aluminum particles (density $2.7 \cdot 10^3\,\mathrm{kg/m^3}$) in a standard ferrofluid like the one described in the Appendix, if it is magnetized in a mean field of about 15 kA/m. From Eq. (15) one can also understand, that a non-homogeneous magnetic field gradient $\nabla H(z)$ (with z being the vertical coordinate) will force bodies of different density to levitate at different vertical positions z^*, which are defined by the condition that the apparent density equals the respective density of the bodies. Therefore it becomes possible to separate material of different density in different layers inside a magnetic fluid under influence of a non-homogeneous magnetic field gradient. The effect of levitation is shown with a test body of density $\rho' = 2.9 \cdot 10^3\,\mathrm{kg/m^3}$ in a standard ferrofluid in Fig. 9.

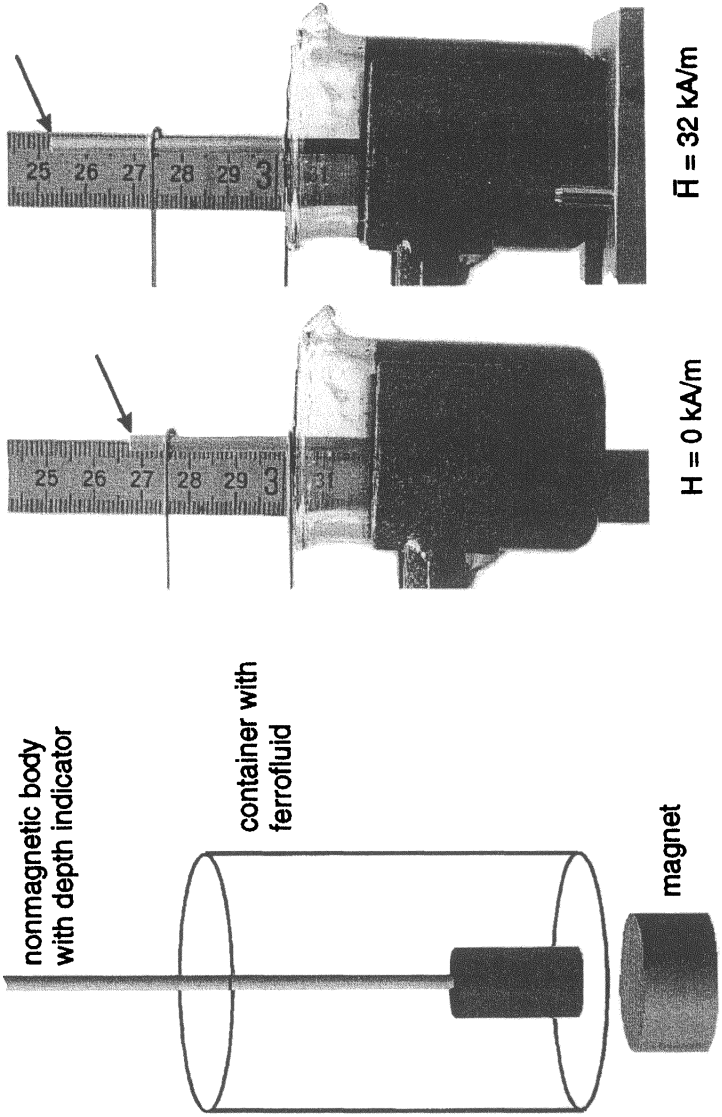

FIGURE 9 Levitation of a non-magnetic test body in a standard ferrofluid under influence of a magnetic field gradient produced by a coil below the fluid container. Left: Sketch of the experimental setup. Right: The levitation of the body due to the applied magnetic field.

TECHNICAL APPLICATION OF LEVITATION IN MAGNETIC FLUIDS

The phenomenon of levitation of non-magnetic bodies in a ferrofluid under the influence of a magnetic field gradient, and the possibility to levitate different materials in different heights in the fluid if the magnetic field gradient is non-homogeneous, enables a technical application in sorting materials by density. The so-called magnetohydrostatic separation is carried out by immersing the material to be separated in the ferrofluid. The ferrofluid is located in a magnetic field with an appropriate gradient. The immersed material has to be ground to small particles with a mean size about 5 mm or more. Smaller grinding usually provides better mechanical separation of mixed materials, but for very small particles hydrodynamic effects reducing the quality of magnetohydrostatic separation may become too important. Even in a constant magnetic field gradient the immersed material will be separated into two different fractions. One of them, with a density lower than the apparent density, will float in the separator, while the heavier one will sink.

If the magnetic field gradient varies with the depth of the fluid, the immersed material will be sorted in different fractions depending on the material's density. These different fractions will be levitated in different depths in the separator according to the discussion of Eq. (14). Thus, by transferring the ground material through the separator by a flow of the ferrofluid, the different density fractions of the material can be recovered from the separator mechanically just by fluid outlets at different depths of the fluid cell.

For a technical use of magnetohydrostatic separation one has to consider not only the apparent density of the fluid and its adjustment by an appropriate magnetic field gradient, but also the influence of hydrodynamic effects on the separation process. In real use the material to be separated will be immersed in a flow of magnetic fluid through the separator. Thus, the time, that the material will be under the influence of the magnetic field gradient is defined by the length of the separator cell and the flow velocity. To achieve optimum separation, this time has to be long enough, to allow the suspended non-magnetic particles to reach their equilibrium position in the fluid. To allow maximum efficiency of the separator the processing time should be as small as

possible. Thus, an optimized compromise for the flow rate of the magnetic fluid through the separator has to be found to satisfy the requirements of separation quality as well as of efficiency. To reduce the processing times the viscosity of the ferrofluid used, which exerts viscous friction to the particles moving relative to the fluid, has to be chosen as small as possible. Since the hindrance of particle motion due to viscous friction strongly influences the characteristics of the separation process, the design of a separator has to take into account phenomena like the increase of viscosity due to the immersed material or the appearance of rotational viscosity. Furthermore the non-magnetic bodies, which can be treated as magnetic holes in the ferrofluid show attractive interaction parallel to the direction of the applied field and repulsive one in the orthogonal direction [35,36]. The attractive interaction lowers the separation quality for non-magnetic particles with diameters less than 1 mm [36], which has to be taken into account during the grinding of the material. From these points it is clear, that the design of a ferrofluid separator requires excellent knowledge about the ferrofluid properties as well as a detailed calculation of the movement of the non-magnetic bodies in the separation region. Approaches for such calculations can be found e.g. in [37,38].

Beside these questions, the most important problem concerning a technical application of magnetohydrostatic separation is the design of the magnetic field system. It will have to provide a magnetic field gradient varying with vertical position in a way, that the minimum density difference that can be separated is optimized for the particular application problem. In addition the problems of feeding of the material into the separator, and of recovery of the different fractions have to be solved. Numerous approaches have been made to apply the separation process in ferrofluids to separation of ores [38], of non-magnetic metals in recycling processes [39–42] or in separation of toxic wastes [43]. As an example Fig. 10 shows a separator for non-ferrous metals from shredded automobiles, that was build and tested by AVCO Co. and NASA [39]. The details concerning the technical layout of the different types of separators can be found in the related literature.

Independent from the interesting possibilities occurring from the magnetohydrostatic separation process, different problems hindered the industrial application of this technique up to now. The most important obstacle is the high cost of magnetic fluids. Since the fluids

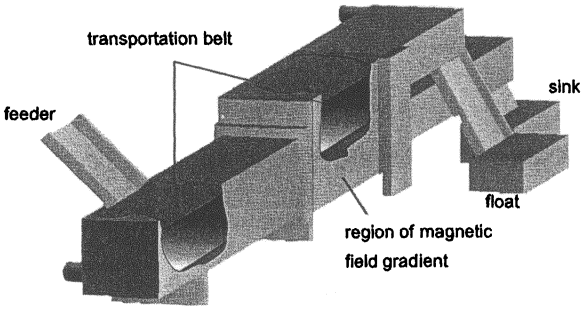

FIGURE 10 Schematic diagram of a magnetohydrostatic test plant for non-ferrous metals from shredded automobiles (after [39]).

are contaminated with the separated material after the separation process, and a certain amount of fluid will stick to the separated particles, a loss of ferrofluid during the separation process will occur. Since ferrofluids are expensive, the costs for the lost ferrofluid can easily exceed the value of the separated material. Therefore the recovery of the ferrofluid has been considered to reduce the costs of the process. The recovery processes require usually the washing of the separated material, the separation of the ferrofluid from the washing agent and the reconcentration of the ferrofluid. Since the ferrofluids may lose colloidal stability during the washing process due to disturbance of their chemical equilibrium, complicated restabilizing methods can be necessary too. Several processes have been reported in the literature (see e.g. [40,44,45]), but usually the efforts are too high to make the magnetohydrostatic separation process economically interesting. In addition the problem of high feed rate would have to be solved to enable an efficient separation process.

CONCLUSION

It has been discussed that stable suspensions of magnetic particles in appropriate carrier liquids exhibit normal liquid behavior coupled with superparamagnetic properties. With different examples it has been

shown, that these coupled features give rise to possible control of flow and properties of such ferrofluids in moderate magnetic fields in the order of 50 mT. In addition the use of ferrofluids in technical and medical applications has been illustrated to show their potential as a functional liquid material for commercial utilization. Finally, the process of magnetohydrostatic separation of non-magnetic bodies in a ferrofluid under the influence of magnetic field gradients has been presented. In this context, it was discussed, that this process offers the possibility of controlled density separation, which can be done with high accuracy. It was also mentioned, that the actual cost of magnetic fluids hinders the commercial use of this technique in mining or recycling of materials. As an outlook one can state, that the magnetohydrostatic separation process would become interesting, if the material that has to be separated would be of high value, like e.g. gold ores in mining processes. In addition, it would be necessary to produce a magnetic fluid, which not necessarily has a high quality, at low cost. Ideally the production cost would have to be so low, so that no recovery of the used ferrofluid would be necessary. Such a cost reduction of ferrofluids can be expected if the quality of the fluid is reduced, i.e. in particular no big effort should be spent on a long time colloidal stability, since the fluid will only have to work for the short time of the separation process if it is not considered to be recovered. Due to a combination of cost reduction and high value of the separated material the process would become economically feasible. Development of other applications of ferrofluids has shown, that a realistic chance of an economically interesting process or device forced always the development of suitable colloids for the considered use. Since the existing data from test plants have already shown, that the separation quality of magnetohydrostatic separators can be much better than in conventional separation processes, further investigation and a focused development of this technique as well as of the related magnetic fluids seems to be an interesting research task.

Acknowledgment

I'm grateful to Prof. Dr. K. Stierstadt (University of Munich) for proofreading of the manuscript, and for helpful and enlightening discussions.

References

[1] G. Wilde, G.P. Gorler and R. Wilinecker. Specific heat capacity of undercooled magnetic melts. *Appi. Phys. Lett.* **68**(21) (1996), 2953.

[2] G. Wilde, G.P. Gorler and R. Willinecker. The specific heat of highly undercooled (Co, Ni, Fe)-Pd melts. *J. Non-Cryst. Solids* **205–207**(1) (1996), 317.

[3] S.S. Papell. U.S. Patent No.3,215,572 (1965).

[4] S.E. Khalafalla and G.W. Reimers. Production of magnetic fluids by peptization techniques. U.S. Patent 3,843,540 (1974).

[5] D. Günther and N. Buske. Magnetische Flüssigkeit. Patent No. P 43 72 826 (1994).

[6] E.E. Bibik and I.S. Lavrov. Method of preparing ferrofluid. Patent No. SU 456666 (1975).

[7] N.P. Matuzewitch, V.K. Rahuba and V.B. Samoilov. Patent No. SU 833545 (1981).

[8] R.W. Chantrell, J. Popplewell and S.W. Charles. Measurements of particle size distribution parameters in ferrofluids. *IEEE Trans. Magnetics* **MAG-14**, 5 (1978), 975.

[9] I. Nakatani, M. Hijikata and K. Ozawa. Iron-nitride magnetic fluids prepared by vapor–liquid reaction and their magnetic properties. *J. Magn. Magn. Mat.* **122** (1993), 10.

[10] R. Massart. Preparation of aqueous magnetic liquids in alkaline and acid media. *IEEE Trans. Magnetics* **MAG-17**, 2 (1981), 1247.

[11] R. Massart, E. Dubois, V. Cabuil and E. Hasmonay. Preparation and properties of monodisperse magnetic fluids. *J. Magn. Magn. Mat.* **149** (1995), 1.

[12] C. Kormann, H.M. Laun and H.J. Richter. MR fluids with nano-sized magnetic particles. *Int. J. Mod. Phys. B* **10**, (23&24) (1996), 3167.

[13] E. Kneller. Ferromagnetismus. 1st edition, Springer-Verlag, Berlin (1962).

[14] T. Weser and K. Stierstadt. Discrete particle size distribution in ferrofluids. *Z. Phys. B-Condensed Matter* **59** (1985), 253.

[15] M. Maiorov. Magnetization curve of magnetic fluid and distribution of magnetic moment of ferroparticles. *10th Riga Conf. Magn. Gidrodin.*, Salaspils (1981), 192.

[16] S. Odenbach. Forced diffusion in magnetic fluids under the influence of a strong magnetic field gradient. *Z. Phys. B-Condensed Matter* **94** (1994), 331.

[17] P. Fanin, B.K.P. Scaife and S.W. Charles. Relaxation and resonance in ferrofluids. *J. Magn. Magn. Mat.* **122** (1993), 159.

[18] R.E. Rosensweig. Ferrohydrodynamics. 1st edition, Cambridge University Press, Cambridge (1985).

[19] E. Blums, A. Cebers and M.M. Maiorov. Magnetic fluids, W. de Gruyter, Berlin, New York (1997).

[20] M. Shliomis. Effective viscosity of magnetic fluids. *Sov. Phys. JETP* **34**(6) (1972), 1291.

[21] J.P. McTague. Magnetoviscosity of magnetic colloids. *J. Chem. Phys.* **51**(1) (1969), 133.

[22] M. Holderied, L. Schwab and K. Stierstadt. *Z. Phys. B-Condensed Matter* **70** (1988), 257.

[23] O. Ambacher, S. Odenbach and K. Stierstadt. Rotational viscosity in ferrofluids. *Z. Phys. B-Condensed Matter* **86** (1992), 29.

[24] S. Odenbach and H. Gilly. Taylor vortex flow of magnetic fluids under the influence of an azimuthal magnetic field. *J. Magn. Magn. Mat.* **152** (1996), 123.

[25] K. O'Grady, H.K. Stewardson, R.W. Chantrell, D. Fletcher, D. Unwin and M.R. Padur. *IEEE Trans. Magn.* **22**(5) (1986), 1134.

[26] A.J. Margida, K.D. Weiss and J.D. Carlson. Magnetorheological materials based on iron alloy particles. *Int. J. Mod. Phys. B* **10**, (23&24) (1996), 3335.

[27] S. Odenbach and H. Störk. Shear dependence of field induced contributions to the viscosity of magnetic fluids at low shear rates. *J. Magn. Magn. Mat.* (in press).

[28] B.M. Berkovsky, V.F. Medvedev and M.S. Krakov. *Magnetic Fluids*. Oxford Sci. Pub., Oxford (1993).
[29] AP&T , Ferrofluidics Product Information (1997).
[30] J. Schwender. Private communication.
[31] E.K. Ruuge and A.N. Rusetski. Magnetic fluids as drug carriers: Targeted transport of drugs by a magnetic field. *J. Magn. Magn. Mat.* **122** (1993), 335.
[32] D.C.F. Chan, D.B. Kirpotin and P.A. Bunn. Synthesis and evaluation of colloidal magnetic iron oxides for the site-specific radiofrequency-induced hyperthermia of cancer. *J. Magn. Magn. Mat.* **122** (1993), 374.
[33] B. Berkovsky and V. Bashtovoy. *Magnetic Fluids and Applications Handbook*. Series of Learning Materials, Begell house, New York (1996).
[34] M.D. Cowley and R.E. Rosensweig. The interfacial stability of a ferromagnetic fluid. *J. Fluid Mech.* **30**(4) (1967), 671.
[35] R. Kaiser, L. Mir and K.A. Curtis. U.S. Patent 3,951,785 (1976).
[36] J. Shimoiizaka, K. Nakatsuka, T. Fujita and A. Kounosu. Sink-float separators using permanent magnets and water based magnetic fluid. *IEEE Trans. Magn.* **16**(2) (1980), 368.
[37] T. Fujita, K. Nakatsuka and J. Shimouzaka. Metall. Rev. of MMIJ **1** (1984), 38.
[38] V.V. Gogosov, R.D. Smolkin, O.P. Saiko and V.S. Krokhmal. Computation and development of a separator in magnetic liquids. *Magnetohydrodynamics* **24**(2) (1988), 222.
[39] L. Mir, C. Simard and S.D. Grana. AIAA paper no. 73-959, *3rd Urban Techn. Conf. And Techn. Display, Boston* **1** (1973).
[40] S. Nogita, T. Ikeguchi, K. Muramori, S. Kazama and H. Sakai. *Hitachi Rev.* **16** (1980) 368.
[41] G.W. Reimers, S.A. Rholl and H.B. Dahlby. *Proc. 5th Min. Waste Util. Symp. Chicago* (1976), 371.
[42] S.E. Khalafalla and G.W. Reimers. Magnetogravimetric separation of nonmagnetic solids. *Bureau of Mines report of Invest.* **RI8532** (1981), 1.
[43] D. Günther. Anwendung des MHS Verfahrens zur Sonderabfallsortierung. *Proc. of the Bremer Ferrofluid Workshop, Bremen* (1997), 58 (in german).
[44] T. Shima. *J. Soc. Powder Tech. Japan* **20** (1983), 32
[45] T. Fujita and J. Shimoiizaka. *J. Chem. Soc. Japan* **6** (1984), 879.

APPENDIX: FUNDAMENTAL DATA OF A STANDARD FERROFLUID

To enable the reader to get an impression of the most important properties of magnetic fluids, this Appendix will summarize these properties for a typical commercial ferrofluid for applications in loudspeakers delivered by Ferrofluidics. The data of this fluid have been used to calculate the examples in this article, and to perform experiments shown in Figs. 3 and 9. The characterization of magnetic fluids is, up to now, not a triviality. The commercial producers usually provide only mean values for the main characteristics, which may differ considerably in the delivered samples and can pose serious problems in the interpretation of experimental results. Thus, a detailed

characterization in particular of the viscous, magnetoviscous and magnetic properties is always necessary. The magnetization curve of this fluid, as well as its size distribution determined by the group of the author has already been presented in Fig. 2. The chemical composition of the surfactant is a confidential information of the producer and cannot therefore be given here. All temperature relevant data are given for $T = 20°C$.

Characteristics of Ferrofluid APG 513 A

Ferrofluid		APG 513 A
Producer		Ferrofluidics
Carrier liquid		Di-ester
Magnetic material		magnetite
Mean particle size	$\bar{d}$	10 nm
Thickness of surfactant (approx.)	s	2 nm
Mean volume of magnetic particles	V	$5.24 \cdot 10^{-25}\,m^3$
Mean volume of particles incl. surfactant layer	$\tilde{V}$	$1.44 \cdot 10^{-24}\,m^3$
Volume concentration of magnetite	ϕ	0.072
Saturation magnetization	M_s	$32 \cdot 10^3\,A/m$
Initial susceptibility	χ	0.8
Density	ρ	$1.28 \cdot 10^3\,kg/m^3$
Density of carrier liquid	ρ_0	$1 \cdot 10^3\,kg/m^3$
Dynamic viscosity	η	0.128 kg/ms
Kinematic viscosity	ν	$1 \cdot 10^{-4}\,m^2/s$

Main Characteristics of the Used Magnetic Material

Spontaneous magnetization of magnetite	M_0	$4.5 \cdot 10^5\,A/m$
Density of magnetite		$5 \cdot 10^3\,kg/m^3$
Crystal anisotropy of magnetite	K_1	$-1 \cdot 10^4\,J/m^3$

Temperature Dependence of Kinematic Viscosity

The temperature dependence of kinematic viscosity is shown in Fig. 11.

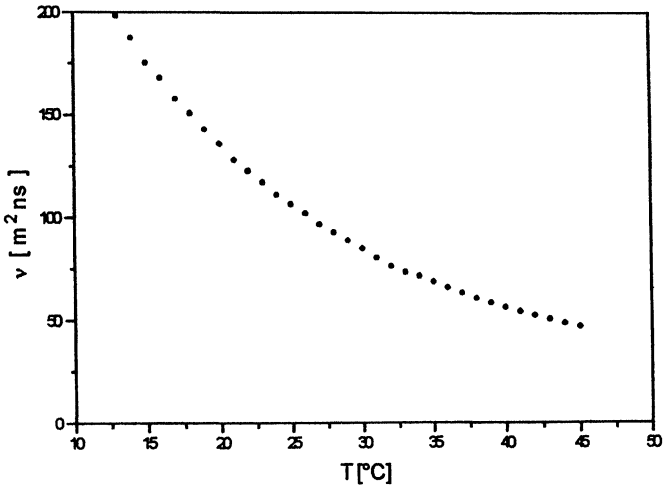

FIGURE 11

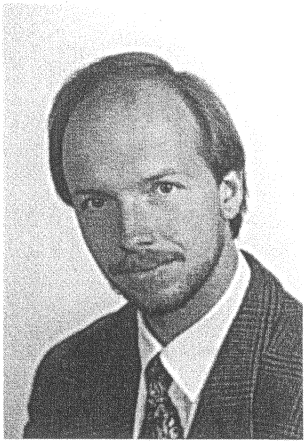

Stefan Odenbach was born in 1964, graduated in physics from the University of Munich, Germany. He obtained his Ph.D. for his work on diffusion in magnetic fluids also from the University of Munich. Between 1994 and 1996 Dr. Odenbach held a post-doctoral position at the University of Wuppertal and since 1997 he is the leader of the ferrofluid group at ZARM, University of Bremen. His research activities are mainly related to transport phenomena in ferrofluids and to the viscous and viscoelastic properties of these fluids. Since 1996 Dr. Odenbach is a member of the International Steering Committee on Magnetic Fluids and he was elected a junior member of the European Academy of Sciences and Arts in 1997.