International Scholarly Research Network
ISRN Mechanical Engineering
Volume 2011, Article ID 431014, 5 pages
doi:10.5402/2011/431014

Research Article

The Effect of a Vertical Vent on Single-Sided Displacement Ventilation

Mostafa Rahimi and Iman Arianmehr

Department of Mechanical Engineering, University of Mohaghegh Ardabili, P.O. Box 179, Ardabil, Iran

Correspondence should be addressed to Iman Arianmehr, iman.arianmehr@gmail.com

Received 27 March 2011; Accepted 28 April 2011

Academic Editor: A. Gelfgat

Natural ventilation in buildings is an energy-saving and a preferable ventilation method. Under the buoyancy effect, single-sided mixed and displacement ventilation modes take place when air is ventilated through one or more openings, located on a vertical wall of an enclosure. Another method of natural ventilation occurs when air flows out through a vertical vent installed on the roof of an enclosure. In the present study, a combination of both the natural ventilation methods was examined. A test room of single-sided ventilation was equipped with a vertical vent. Ventilation rate through the openings was evaluated based on the air flow velocity measured at the surface area of the openings. The vertical vent was kept closed during the first run of the experiments, then the same experiments repeated where the vent was in use. Based on the experimental results, the effect of the vertical vent on the ventilation rate is clarified and a model on combination for two ventilation methods is suggested.

1. Introduction

Air conditioning engineers try to design a healthy and comfortable environment in buildings. Many parameters such as heating and cooling load, interior and exterior pollutant sources, supplying fresh, air and adjusting humidity should be taken into account to provide comfortable conditions within the interior spaces. In order to reduce and repel air pollutants, the inside air is usually replaced by fresh air from outside the building. Forced and natural ventilations are two possible mechanisms, by which the air displacement could be achieved. Unlike the forced ventilation, natural ventilation takes place by the wind and buoyancy effects, and it is an energy-saving approach. Under the effect of buoyancy forces, natural single-sided ventilation could be classified as replacement and mixture modes. On one hand, in the replacement ventilation mode, two openings at the upper and lower parts of a vertical wall are used to replace the air. The warm and light air comes out from the upper opening while the fresh air is replaced through the lower one. One the other hand, in the mixing ventilation mode, the air is exchanged in both directions from different sections of the same opening.

The specifications and details of the displacement ventilation can be found in the published literature. Allard and Utsumi [1] studied airflow through the large vertical openings. They presented a general solution by which the effects of density gradients and turbulence on gravitational flows could be taken into account. Dascalaki et al. [2] measured air velocity at the vertical centerline of a vertical opening, located at various heights of a wall. Using experimental data, different mathematical approaches including correlation and intelligent techniques were used for the prediction of the air velocity at the opening level. Howell and Potts [3] presented experimental data for the temperature stratification, established within a full-scale enclosure for the natural displacement ventilation. A range of predictive techniques were also examined for the flow and temperature fields. They pointed out that a complete thermal radiation model should be employed, when using the CFD technique for this type of ventilated flow. Jiang and Chen [4] investigated buoyancy-driven, single-sided natural ventilation with large openings, using full-scale experimental and computational fluid dynamics (CFD) methods. Airflow characteristics and ventilation rate were measured, and

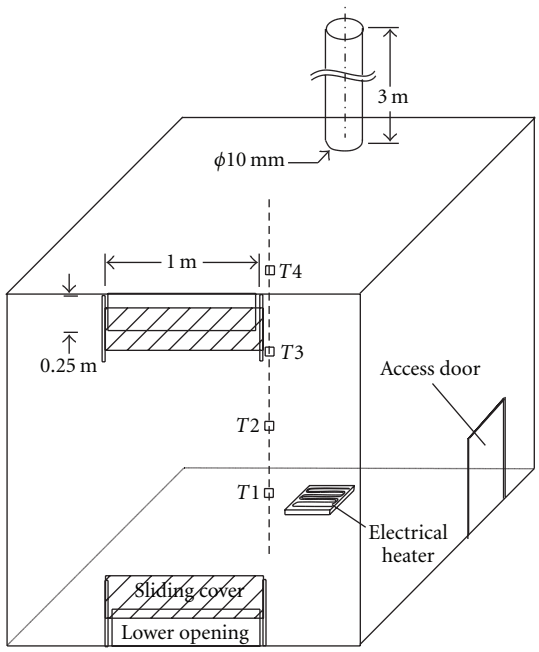

Figure 1: Schematic representation of the test room.

the experimental data were used to validate different CFD models. Based on their findings, large eddy simulation model provided better results. Fitzgerald and Woods [5] studied the natural ventilation of a room with a source of heating at the base and with vents at multiple heights, both theoretically and experimentally. They concluded that the position of neutral buoyancy, where the pressure in the room equals that in the exterior, is the key to the analysis, so that the inflow and outflow air take place from the vents, located below and above the neutral buoyancy, respectively. Haslavsky et al. [6] experimented the buoyancy-induced natural ventilation in a full-scale enclosure, with upper and lower openings at one of the sidewalls. The interaction between the mixing and the displacement ventilation modes was explored under both the transient and steady state conditions. The ratio between the opening heights (and areas) of the lower and upper vents was considered as an important parameter based on which the mode of the ventilation could be altered. In a similar study, Tanny et al. [7] measured mean and turbulent air velocity and temperature through the upper opening, using a three-dimensional sonic anemometer. They concluded that the contribution of the turbulent to the total (mean and turbulent) heat flux through the vent decreased, as the ventilation transformed from the mixed to the displacement mode.

The contribution of a solar chimney to the natural ventilation in buildings has also been the subject of various experimental and theoretical studies [8, 9]. In an early study, Bansal et al. [10] examined the effect of discharge coefficients of the inlet and outlet areas of a vertical channel on the established air flow rate, using a mathematical model. The model used in their study assumed that the inside air warms up within a solar collector, and then it discharges into the surroundings through a vertical channel. Afonso and Oliveira [11] compared the behavior of a solar chimney with a conventional one, under the same environmental conditions. They presented a thermal model, in which the effect of the outside wind velocity and the climate variations were considered on the flow established within the chimneys. Based on their findings, the efficiency of a solar chimney, in which the southern vertical wall absorbs solar radiation, is 10–20% greater than that of a conventional one.

Considering the fact that the buoyancy effect is the main and common reason for the displacement ventilation mode and also for the ventilation caused by a chimney, a combination of the two ventilation methods is examined in the present study. A set of experiments were conducted for the displacement ventilation mode, using a full-scale test room. A typical chimney, acting as a vertical vent which was installed on the roof of the room, and the same experiments were repeated while the vertical vent was open to the surroundings. The effect of the vent on the inflow and outflow rates, based on which the ventilation rate could be specified, quantitatively was examined. A model based on the resistant of the openings against the air flow also was developed, and the predictions of the model were compared with the experimental data.

2. Experimental Rig and Procedure

A cubical full-scale enclosure, which represents a simplified model of a room, was constructed. Particleboard of 18 mm thickness installed on a wooden structure, formed the walls of the enclosure. Sealing material was used to block small openings between the walls. An entrance on the side wall and two openings on the front wall had been constructed one at the top and the other, at the bottom of the wall. Both openings, where the height of each opening was individually adjustable in the range of 0–0.25 m by means of one sliding cover were 1 m in length. A vertical vent was installed at the center line of the roof, close to the back wall of enclosure. The internal diameter and the height of the vent were 0.1 and 3 m, respectively. An electrical heater and four K type thermocouples (2 m $\times$ 0.2 mm/PTFE shield/$\pm$0.5°C/50–200°C) were installed inside the cavity. The cavity was inside a large steady environment, in which the temperature was not being controlled. A schematic representation of the enclosure is shown in Figure 1.

Local velocity of the air flow passing, through the lower and upper openings was measured with a mini CTA hotwire probe. The length and diameter of the miniature probe were 1.2 mm and 8 μm, respectively; and it was calibrated to compensate the effect of the temperature of the flow. Considering two-dimensional flow assumption, normal component of the air flow was only measured at different points, located on the middle vertical line of the openings. Then the air flow rate through the openings was evaluated, using the measured air velocity profile.

The heater was turned on and the input power was adjusted to establish a steady state heat and flow conditions, in which the mean temperature inside the room was about 20°C greater than the surroundings temperature. The uncovered part of the openings was also adjusted to have

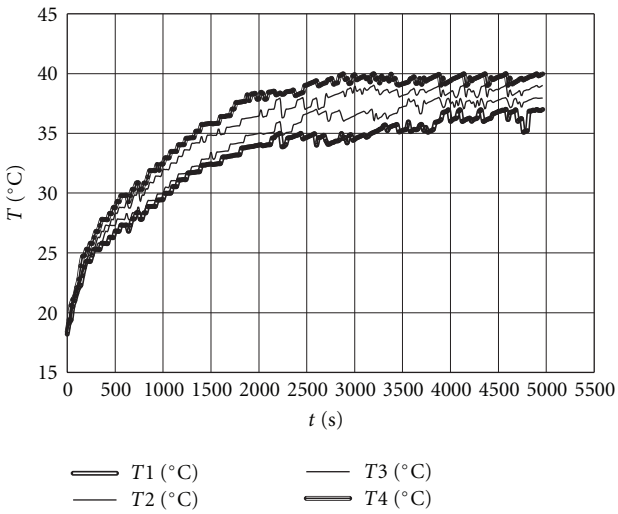

Figure 2: Air temperature variations within the test room.

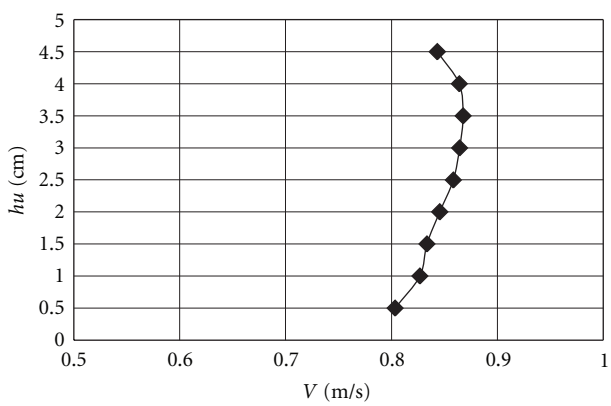

Figure 3: Normal velocity component at the middle of the upper opening $hl = 4$ cm, $hu = 5$ cm.

a displacement ventilation mode only in all stages of the experiment. In order to verify the steady heat flow condition, temperature variations inside the room were recorded by the thermocouples, installed within the room. Figure 2 presents a sample of the temperature variations for the case in which the heights of the lower and upper openings are 0.04 and 0.05 m, respectively. It is seen that under the established steady state condition, which has been reached in about 1 hour, a temperature difference of about 4°C exists between the recordings of the lower and upper thermocouples. Under the same experimental circumstances, the measured normal velocity profile at the middle of the upper opening is seen in Figure 3. It is observed that the velocity is almost uniform, except that it decreases near the upper and lower bonds of the opening. Also, the measured velocity is slightly higher at the upper parts of the uncovered opening area.

A set of experiments were conducted, in which the surface area of the upper opening was kept constant, when the uncovered surface area of the lower opening increased, so that further increment had no effect on the outflow rate from the upper opening. The height of the upper opening

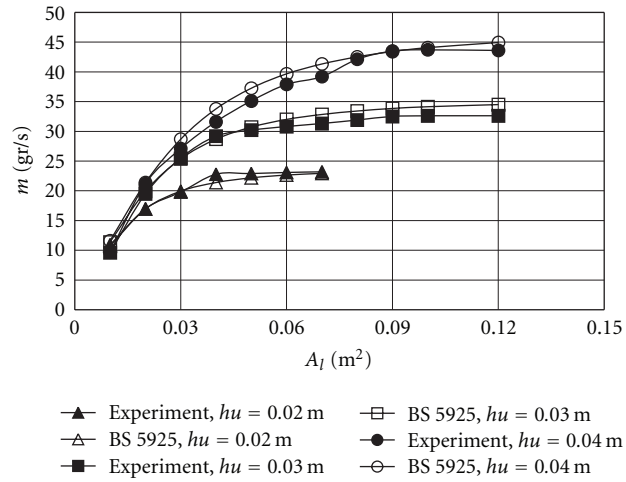

Figure 4: Air outflow rate through the upper opening.

was examined in the range of 0.01–0.05 m resulting in the opening surface area of 0.01–0.05 m^2 correspondingly. All the experiments were also repeated for the case in which the vertical vent was open to the surroundings.

3. Results and Discussion

For a constant height at the upper opening, the uncovered area of the lower opening was adjusted, so that the displacement ventilation mode preserved. Normal component, of the air velocity at different points of the mid line for both openings, were measured and the air flow rate passing through the openings was then computed, using ideal gas assumption. The difference between the evaluated air outflow and inflow was less than 5% in all the experimented range of surface area of the openings. Then, the results were compared with the prediction of an equation proposed by BSI [12] as

$$Q = C_d \left[\frac{A_u \cdot A_l}{\left(A_u^2 + A_l^2\right)^{1/2}} \right] \left(\frac{2gH(T_i - T_o)}{T_o} \right)^{1/2}, \qquad (1)$$

where C_d is the discharge coefficient and it is assumed to be 0.65 for a simple sharp-edged opening. Figure 4 presents the air outflow rate through a constant area at the upper opening when the uncovered area of the lower opening is increased. At the first, it can be seen that the flow rate increases as the surface area of the lower opening is increased, then it approaches to a constant value, so that no further increment is observed when the surface area of the lower opening is enlarged. The outflow rate obtained in the experiment is also in well agreement with the prediction of (1).

In order to examine the ventilation rate caused by the vertical vent itself, the upper opening was completely covered while the lower opening and the vertical vent both were in use. Under the same experimental conditions, air flow rate through lower opening vertical vent was measured. For evaluating the flow rate through the vent, only air velocity

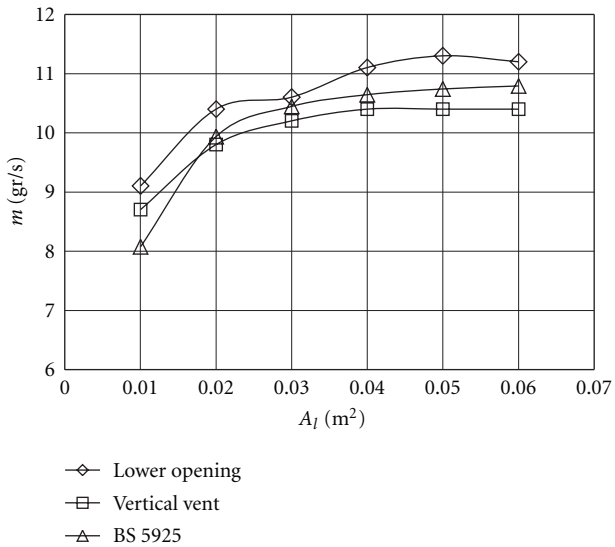

Figure 5: Air flow rate through the lower opening and the vertical vent.

on the centerline of the exit area is recorded. Using empirical equation as

$$\frac{u}{u_c} = \left(1 - \frac{r}{R}\right)^{1/7} \tag{2}$$

which describes a developed velocity profile of turbulent flow in a circular duct, mean velocity of the flow is calculated based on which, the air flow rate specified [13]. Air flow rate can be obtained by this procedure and the flow rate through the lower opening are seen in Figure 5. Relative deviation between the evaluated flow rates is less than 8%. It is also seen that the flow rate through the vent is almost constant and it is less affected by the surface area of the lower opening. Using an equation proposed by Afonso and Oliveira [11] as:

$$m = \frac{\rho A\sqrt{2\beta g(T_i - T_o)L}}{\sqrt{k_i + k_o + f(L/D)}}, \tag{3}$$

the flow rate through the vertical vent was also calculated. Independent of surface area of the lower opening, the prediction of (3) would be about 0.0106 kg/s which is also consistent with the evaluated flow rate. As another approach, an equivalent surface area instead of the vertical vent was substituted in (1) to predict the air flow rate through the vent. For an equivalent surface area of 0.0091 m^2, the predicted air flow rates were quite consistent with the measured values. Also these values are included in Figure 5.

4. Physical Model for the Combined Ventilation

An electrical circuit analog is widely used in conduction heat transfer analyses. This is realized by considering the temperature difference to be analogous to a voltage difference, the heat flux to be like current flow, and the remainder of the heat transfer equation to be like a thermal resistance. Equation (1) could also be interpreted in the same manner as

$$Q = \frac{((T_i/T_o) - 1)^{1/2}}{\left(1/C_d\sqrt{2gH}\right)\left(\sqrt{A_u^2 + A_l^2}/A_uA_l\right)}. \tag{4}$$

Based on this equation, the resistance to the air flow will depend on three parameters, including: the physical and geometrical specifications of the openings, the vertical distance between openings and the surface area of both openings. The term by which the surface area of the openings is considered, could be approximated as

$$\left(\frac{\sqrt{A_u^2 + A_l^2}}{A_uA_l}\right) \approx 0.8\left(\frac{1}{A_u} + \frac{1}{A_l}\right), \tag{5}$$

where a maximum deviation of 12% exists in this approximation.

For the case in which both the upper opening and the vent are in use, the resultant resistance could be evaluated as the sum of the resistance of the lower opening and the parallel resistance of the upper opening and the vertical vent

$$R = \frac{1}{C_d\sqrt{2gH}}\left(0.8\frac{1}{A_l} + \frac{(0.8(1/A_u))(0.8(1/A_e))}{0.8(1/A_u + 1/A_e)}\right). \tag{6}$$

This equation can be expressed as

$$R = \frac{1}{C_d\sqrt{2gH}}\left(0.8\frac{1}{A_l} + 0.8\frac{1}{A_u + A_e}\right). \tag{7}$$

This equation indicates that the resistance against the air flow in combination ventilation considered in the present study could be evaluated as

$$R = \frac{1}{C_d\sqrt{2gH}}\left(\frac{\sqrt{(A_u + A_e)^2 + A_l^2}}{(A_u + A_e)A_l}\right). \tag{8}$$

Air flow rate predicted by the model and those obtained from the experiment are presented in Figure 6. From this figure, it is seen that the consistency between the values is quite reasonable for the smaller surface areas of the upper opening; however, the predicted values are slightly lower than the experimental values for larger surface area of the upper opening and the difference increases as the surface area of the upper opening is enlarged.

5. Concluding Remarks

For the single-sided displacement ventilation, the prediction of (1) was quite reasonable in the experimented range of the variables. Ventilation rate through a vertical vent was also predictable through a theoretical formulation such as (2). When using two ventilation methods at the same time, the resultant ventilation rate could not be simply evaluated by summing up the ventilation rates which were obtained individually. For the same condition at the lower opening,

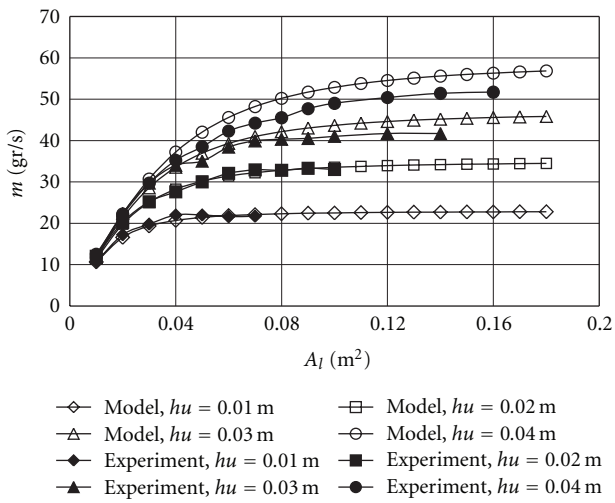

Figure 6: Experimented air flow rate and the prediction of the model for combined ventilation.

the outflow decreases from both the upper opening and the vertical vent. The air flow rate for the combined ventilation situation was reasonably predicted by the physical model proposed in the present study. However, the air flow rate was slightly underestimated by the model, as the surface area of the upper opening increased.

Nomenclature

A: Cross section area of the vertical vent (m^2)
A_l: Lower opening surface area (m^2)
A_u: Upper opening surface area (m^2)
A_e: Equivalent surface area (m^2)
C_d: Discharge coefficient
D: Diameter of the vertical vent (m)
f: Surface friction coefficient
g: Gravity acceleration (9.81 m/s^2)
H: Vertical distance between lower and upper openings (m)
hu: Height of the upper opening (m)
hl: Height of the lower opening (m)
k_i: Pressure drop coefficient at the inlet of the vent
k_o: Pressure drop coefficient at the outlet of the vent
L: Length of the vertical vent (m)
m: Air mass flow rate (gr/s)
Q: Air volumetric flow rate (m^3/s)
R: Radius of the vertical vent (m)
T_i Temperature inside the enclosure (K, °C)
T_o: Temperature outside the enclosure (K, °C)
u: Local velocity within the vertical vent (m/s)
u_c: Centerline velocity of the vent (m/s)
V: Local velocity at the opening surface (m/s).

Greek Symbols

β: Air thermal expansion coefficient (1/K)
ρ: Air density (kg/m^3).

Subscripts

l: Lower opening
u: Upper opening
i: Inlet
o: Outlet
c: Centerline.

References

[1] F. Allard and Y. Utsumi, "Airflow through large openings," *Energy and Buildings*, vol. 18, no. 2, pp. 133–145, 1992.
[2] E. Dascalaki, M. Santamouris, and D. N. Asimakopoulos, "On the use of deterministic and intelligent techniques to predict the air velocity distribution on external openings in single-sided natural ventilation configurations," *Solar Energy*, vol. 66, no. 3, pp. 223–243, 1999.
[3] S. A. Howell and I. Potts, "On the natural displacement flow through a full-scale enclosure, and the importance of the radiative participation of the water vapour content of the ambient air," *Building and Environment*, vol. 37, no. 8-9, pp. 817–823, 2002.
[4] Y. Jiang and Q. Chen, "Buoyancy-driven single-sided natural ventilation in buildings with large openings," *International Journal of Heat and Mass Transfer*, vol. 46, no. 6, pp. 973–988, 2003.
[5] S. D. Fitzgerald and A. W. Woods, "Natural ventilation of a room with vents at multiple levels," *Building and Environment*, vol. 39, no. 5, pp. 505–521, 2004.
[6] V. Haslavsky, J. Tanny, and M. Teitel, "Interaction between the mixing and displacement modes in a naturally ventilated enclosure," *Building and Environment*, vol. 41, no. 12, pp. 1755–1761, 2006.
[7] J. Tanny, V. Haslavsky, and M. Teitel, "Airflow and heat flux through the vertical opening of buoyancy-induced naturally ventilated enclosures," *Energy and Buildings*, vol. 40, no. 4, pp. 637–646, 2008.
[8] H. B. Awbi, "Design considerations for naturally ventilated buildings," *Renewable Energy*, vol. 5, no. 5-8, pp. 1081–1090, 1994.
[9] J. Arce, M. J. Jiménez, J. D. Guzmán, M. R. Heras, G. Alvarez, and J. Xamán, "Experimental study for natural ventilation on a solar chimney," *Renewable Energy*, vol. 34, no. 12, pp. 2928–2934, 2009.
[10] N. K. Bansal, R. Mathur, and M. S. Bhandari, "Solar chimney for enhanced stack ventilation," *Building and Environment*, vol. 28, no. 3, pp. 373–377, 1993.
[11] C. Afonso and A. Oliveira, "Solar chimneys: simulation and experiment," *Energy and Buildings*, vol. 32, no. 1, pp. 71–79, 2000.
[12] BS 5925, *Code of Practice for Ventilation Principles and Designing for Natural Ventilation*, British Standards Institution, London, UK, 1991.
[13] V. L. Streeter, E. B. Wylie, and K. W. Bedford, *Fluid Mechanics*, New York, NY, USA, 3rd edition, 1997.