International Scholarly Research Network
ISRN Mechanical Engineering
Volume 2011, Article ID 892460, 13 pages
doi:10.5402/2011/892460

Research Article

Vibrational Study of Fluid-Filled Functionally Graded Cylindrical Shells Resting on Elastic Foundations

Abdul Ghafar Shah,[1] Tahir Mahmood,[1] Muhammad Nawaz Naeem,[2] and Shahid Hussain Arshad[3]

[1] *Department of Mathematics, Islamia University of Bahawalpur, Bahawalpur, Punjab 63100, Pakistan*
[2] *Department of Mathematics, G. C. University Faisalabad, Faisalabad, Punjab 38000, Pakistan*
[3] *Department of Mathematics, University of Sargodha, Sargodha, Punjab 40100, Pakistan*

Correspondence should be addressed to Abdul Ghafar Shah, aghafarshah@yahoo.com

Received 15 January 2011; Accepted 2 March 2011

Academic Editor: J. Clayton

Vibrational characteristics of functionally graded cylindrical shells filled with fluid and placed on Winkler and Pasternak elastic foundations are investigated. Love's thin-shell theory is utilized for strain-displacement and curvature-displacement relationships. Shell dynamical equations are solved by using wave propagation approach. Natural frequencies for both empty and fluid-filled functionally graded cylindrical shells based on elastic foundations are determined for simply-supported boundary condition and compared to validate the present technique. Results obtained are in good agreement with the previous studies. It is seen that the frequencies of the cylindrical shells are affected much when the shells are filled with fluid, placed on elastic foundations, and structured with functionally graded materials. The influence of Pasternak foundation is more pronounced than that of Winkler modulus.

1. Introduction

Cylindrical shells have vast applications in many engineering fields such as aerospace, civil, chemical, mechanical, naval, and nuclear. First thin-shell theory was developed by Love [1]. He based his theory on Kirchhoff's approximations for plate and beam problems. Arnold and Warburton [2] did some pioneering work on the vibration characteristics of cylindrical shells. Best reviews on the shell vibration characteristics have been given by Leissa [3], Blevins [4], and Markus [5]. Different types of materials like isotropic, laminated and composite like functionally graded materials are used in fabricating shells.

Loy et al. [6] did vibration frequency analysis of functionally graded cylindrical shells. They have employed the Raleigh-Ritz numerical technique to evaluate natural frequencies for simply-supported cylindrical shells. The axial modal dependence was approximated by trigonometric functions. They studied their characteristics with regard to circumferential wave numbers and geometrical parameters of length-to- radius and thickness-to- radius ratios. Pradhan et al. [7] did work on vibration characteristics of functionally graded cylindrical shells made of stainless steel and zirconia for a number of boundary conditions. They also used the Rayleigh-Ritz method to solve the shell governing equations. Characteristic beam functions were utilized for the axial modal displacement deformations. In 2002, Naeem [8] worked on vibration analysis of nonrotating and rotating FGM circular cylindrical shells using Rayleigh-Ritz method and Galerkin technique, respectively. Ritz polynomial functions for nonrotating shells and characteristic beam functions for rotating ones approximate axial modal dependences. Najafizadeh and Isvandzibaei [9] have studied the vibration characteristics of functionally graded material cylindrical shells with ring support. They based their analysis on higher-order plate theory. Arshad et al. [10] studied the natural frequencies of FGM cylindrical shells by exponential volume fraction law with base e $(= 2.718\ldots)$. Shah et al.

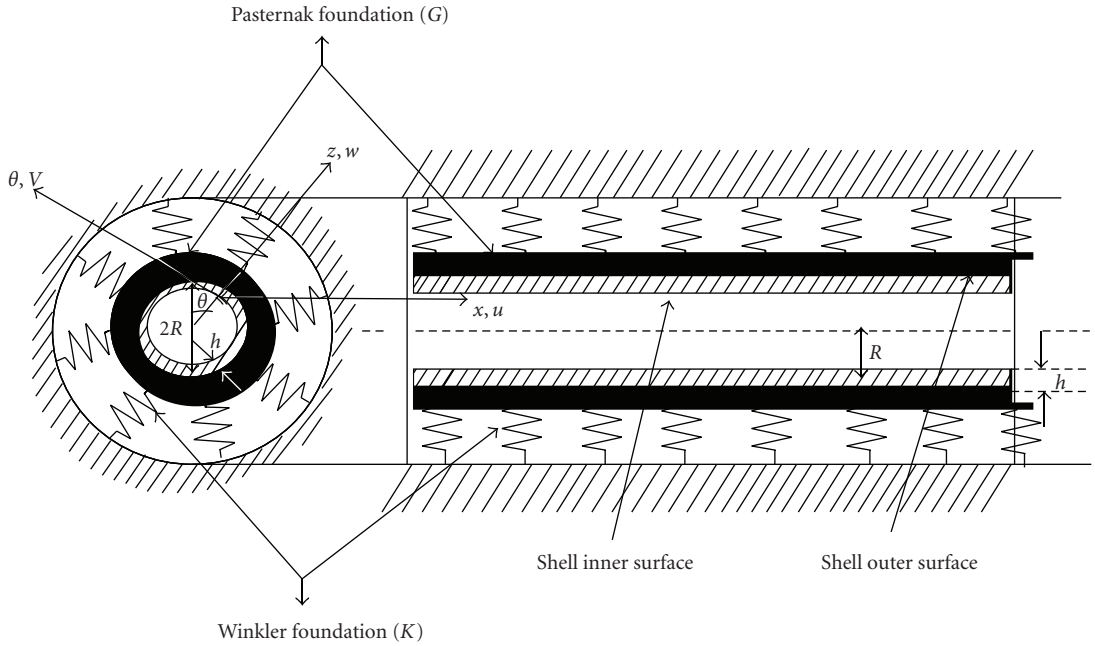

Figure 1: View of circumferential and longitudinal cross section of the FGM cylindrical shell resting on elastic foundations.

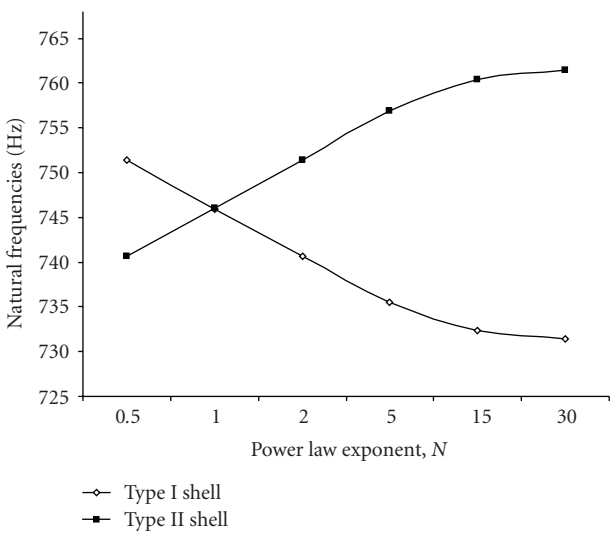

Figure 2: Variation of natural frequencies with power law exponent N of fluid-filled FGM type I & II cylindrical shells on elastic foundations for $m = 1$, $n = 5$, $L/R = 20$, $h/R = 0.002$, $G = 1.5 \times 10^7$, and $K = 1.5 \times 10^7$.

Table 1: Comparison of frequency parameters $\Omega = \omega R\sqrt{(1-\nu^2)\rho/E}$ for a simply-supported isotropic cylindrical shell ($m = 1$, $L/R = 20$, $h/R = 0.01$, $\nu = 0.3$).

n	Loy et al. [6]	Present
1	0.016102	0.016101
2	0.009387	0.009377
3	0.022108	0.022103
4	0.042096	0.042094
5	0.068008	0.068007
6	0.099730	0.099729
7	0.137239	0.137238
8	0.180527	0.180527
9	0.229594	0.229593
10	0.284435	0.284435

[11] further modified and extended this volume fraction law to a general base ($b > 0$). Arshad et al. [12] also extended their work of reference [10] to study the natural frequencies of FGM cylindrical shells under the influence of various boundary conditions with exponential volume fraction law. Arshad et al. [13, 14] also evaluated natural frequencies of bi-layered cylindrical shells by inserting different materials in the layers of the shells. Rayleigh-Ritz numerical technique has been employed to solve the governing equations of motions in the references [9–14].

Fluid-filled cylindrical shells have paramount importance in engineering and industries to design pressure vessels, fluid tanks and underground pipe fitting. Junger [15, 16] maidenly studied the structural response of thin-shell in an acoustic fluid media by studying the free and forced vibrations of cylinders submerged in an acoustic medium. Chung et al. [17] gave an analytical and experimental study of the vibrational characteristics of thin circular cylindrical shells filled with fluid. Goncalves and Batista [18] gave a theoretical study for the free vibration of vertical shells with simply-supported end condition, partially filled with or submerged in a fluid. They used Sanders' shell theory for acquiring shell frequency equation coupling with shell dynamical equation and the acoustic medium of fluid equations. Amabili [19] has studied the natural frequencies and mode shapes of a simply-supported circular cylindrical

Table 2: Comparison of frequency parameters $\Omega = \omega R\sqrt{(1-\nu^2)\rho/E}$ for an isotropic cylindrical shell with simply-supported boundary condition ($m = 1$, $L/R = 20$).

h/R	n	Li [28]	Present
0.05	0	0.09295	0.092968
	1	0.01610	0.016102
	2	0.03930	0.039271
	3	0.109824	0.109811
	4	0.210284	0.210277
0.002	0	0.09293	0.092929
	1	0.016101	0.016101
	2	0.005453	0.005452
	3	0.005042	0.005041
	4	0.008534	0.008533

shell placed horizontally partially filled with liquid. He [20] further extended his study to investigate the free vibrations of circular cylindrical shells and tubes entirely filled with a dense and partially immersed in various fluids under different end conditions. Sharma et al. [21] have determined the natural frequencies of vertical cantilever fluid-filled composite shells by utilizing the Fourier series of trigonometric functions to approximate the axial modal dependence. Zhang et al. [22] solved the shell frequency equations with wave propagation approach to study the vibrational response of cylindrical shells containing fluid. Natsuki et al. [23] used this technique for the vibrational analysis of carbon nanotubes having fluid inside. Iqbal et al. [24] investigated the vibration characteristics of FGM circular cylindrical shells using wave propagation approach. Shah et al. [25] studied the vibration characteristics of functionally graded cylindrical shells resting on Winkler and Pasternak elastic foundations by using wave propagation approach. This approach seem to be a simple and easily applicable to study vibration characteristics of shells involving fluids. In the wave propagation method, the axial modal dependence is approximated by simple wave number characteristic formulas. Paliwal et al. [26] and Paliwal and Pandey [27] have studied the free vibrations of circular cylindrical shells resting on elastic foundations.

In the present study, the vibration characteristics of fluid-filled cylindrical shells fabricated from functionally graded materials resting on the elastic foundations are investigated. The acoustic wave equation of fluid is coupled with the shell dynamical equations. This gives the mathematical relationship between solid and fluid dynamics. The influence of FGM configurations on shell vibrations is analyzed for various physical and geometrical parameters. For strain-displacement and curvature displacement relationships, Love's thin-shell theory is used and wave propagation approach is employed to solve the shell dynamical equations involving the Winkler and Pasternak elastic foundation and fluid loading terms. A good agreement is found between the present and the literature's results on comparison.

2. Theoretical Formulation

A circular cylindrical shell is considered for its vibration characteristics with length L, thickness h, and mean radius R as shown in Figure 1. The material properties are Young's modulus E, the Poisson ratio ν, and the mass density ρ. An orthogonal coordinate system (x, θ, z) is assumed to be established at the shell mid surface where x, θ, and z represent the axial, circumferential, and radial coordinates, respectively. u, v and w are axial, circumferential and radial deformation displacements, respectively, of the shell mid surface.

The equations of motion for a cylindrical shell derived from the Love's thin-shell theory can be written as

$$\begin{gathered}\frac{\partial N_x}{\partial x} + \frac{1}{R}\frac{\partial N_{x\theta}}{\partial \theta} = \rho h \frac{\partial^2 u}{\partial t^2},\\ \frac{\partial N_{x\theta}}{\partial x} + \frac{1}{R}\frac{\partial N_\theta}{\partial \theta} + \frac{2}{R}\frac{\partial M_{x\theta}}{\partial x} + \frac{1}{R^2}\frac{\partial M_\theta}{\partial \theta} = \rho h \frac{\partial^2 v}{\partial t^2},\\ \frac{\partial^2 M_x}{\partial x^2} + \frac{2}{R}\frac{\partial^2 M_{x\theta}}{\partial x \partial \theta} + \frac{1}{R^2}\frac{\partial^2 M_\theta}{\partial \theta^2} - \frac{N_\theta}{R} = \rho h \frac{\partial^2 w}{\partial t^2},\end{gathered} \tag{1}$$

where N_x, N_θ, and $N_{x\theta}$ are force resultants and M_x, M_θ, $M_{x\theta}$ moment resultants along the normal and shear directions, respectively. They are defined as

$$\begin{pmatrix} N_x \\ N_\theta \\ N_{x\theta} \\ M_x \\ M_\theta \\ M_{x\theta} \end{pmatrix} = \begin{pmatrix} A_{11} & A_{12} & 0 & B_{11} & B_{12} & 0 \\ A_{12} & A_{22} & 0 & B_{12} & B_{22} & 0 \\ 0 & 0 & A_{66} & 0 & 0 & B_{66} \\ B_{11} & B_{12} & 0 & D_{11} & D_{12} & 0 \\ B_{12} & B_{22} & 0 & D_{12} & D_{22} & 0 \\ 0 & 0 & B_{66} & 0 & 0 & D_{66} \end{pmatrix} \begin{pmatrix} e_1 \\ e_2 \\ \gamma \\ \kappa_1 \\ \kappa_2 \\ 2\tau \end{pmatrix}, \tag{2}$$

where e_1, e_2, and γ are the reference surface strains and k_1, k_2 and τ are the surface curvatures. A_{ij}, B_{ij}, and D_{ij} ($i, j = 1, 2$ and 6) are the membrane, coupling, and flexural stiffnesses defined as

$$\left\{A_{ij}, B_{ij}, D_{ij}\right\} = \int_{-h/2}^{h/2} Q_{ij}\{1, z, z^2\}\, dz. \tag{3}$$

The reduced stiffnesses Q_{ij} ($i, j = 1, 2$ and 6) for isotropic materials are defined as

$$Q_{11} = Q_{22} = \frac{E}{1-\upsilon^2}, \quad Q_{12} = \frac{\upsilon E}{1-\upsilon^2}, \quad Q_{66} = \frac{E}{2(1+\upsilon)}. \tag{4}$$

The cylindrical shell considered in this study is assumed to be of thin with thickness to radius ratio less than 1/20. For strain displacements and the curvature displacements Love's

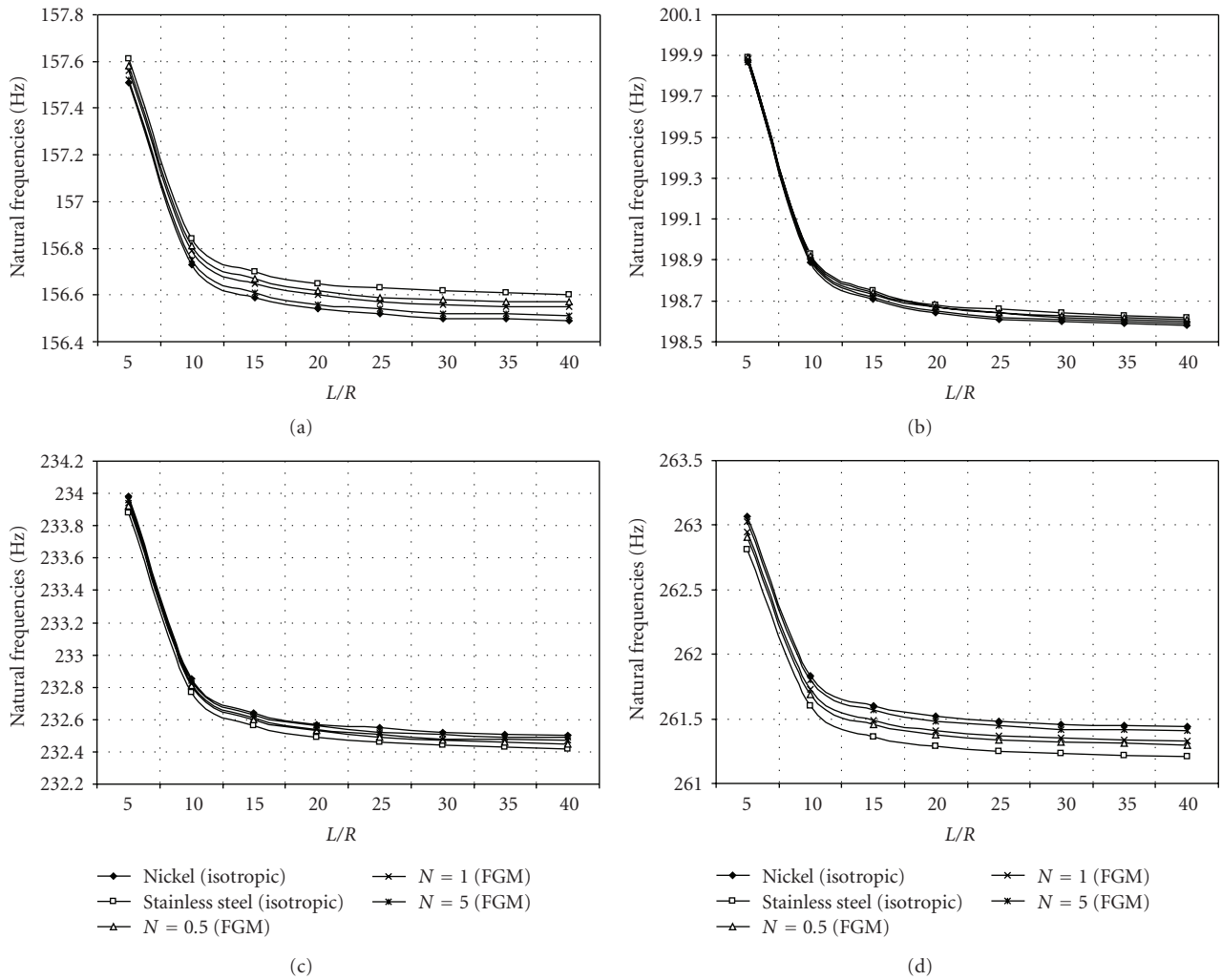

Figure 3: (a) Variation of natural frequencies (Hz) of fluid-filled type I cylindrical shells with L/R ratio on elastic foundations for $m = 1$, $n = 4$, $h/R = 0.001$, $K = 1.5e+7$, $G = 1.5e+7$. (b) Variation of natural frequencies (Hz) of fluid-filled type I cylindrical shells with L/R ratio on elastic foundations for $m = 1$, $n = 4$, $h/R = 0.001$, $K = 1.5e+7$, $G = 2.5e+7$. (c) Variation of natural frequencies (Hz) of fluid-filled type I cylindrical shells with L/R ratio on elastic foundations for $m = 1$, $n = 4$, $h/R = 0.001$, $K = 1.5e+7$, $G = 3.5e+7$. (d) Variation of natural frequencies (Hz) of fluid-filled type I cylindrical shells with L/R ratio on elastic foundations for $m = 1$, $n = 4$, $h/R = 0.001$, $K = 1.5e+7$, $G = 4.5e+7$.

thin-shell theory is utilized and these quantities are defined as

$$\{e_1, e_2, \gamma\} = \left\{-\frac{\partial u}{\partial x}, -\frac{1}{R}\left(\frac{\partial v}{\partial \theta} + w\right), -\left(\frac{\partial v}{\partial x} + \frac{1}{R}\frac{\partial u}{\partial \theta}\right)\right\},$$
$$\{k_1, k_2, \tau\} = \left\{-\frac{\partial^2 w}{\partial x^2}, -\frac{1}{R^2}\left(\frac{\partial^2 w}{\partial \theta^2} - \frac{\partial v}{\partial \theta}\right), -\frac{1}{R}\left(\frac{\partial^2 w}{\partial x \partial \theta} - \frac{\partial v}{\partial x}\right)\right\}. \quad (5)$$

The above-mentioned expressions for the surface strains and curvatures are substituted into (2) to get the forces and moments of the shell and then putting them into shell dynamical (1)–(3) and introducing the fluid acoustic pressure inside the cylinder and the Winkler and Pasternak foundations terms ($Kw - G\nabla^2 w$) in the z-direction outside the cylinder. The equations of motion for a modified cylindrical shell can be written in the differential operator form as:

$$L_{11}u + L_{12}v + L_{13}w = \rho_t \frac{\partial^2 u}{\partial t^2},$$
$$L_{21}u + L_{22}v + L_{23}w = \rho_t \frac{\partial^2 v}{\partial t^2}, \quad (6)$$
$$L_{31}u + L_{32}v + L_{33}w = \rho_t \frac{\partial^2 w}{\partial t^2} - P + Kw - G\nabla^2 w,$$

where L_{ij} $(i, j = 1, 2, 3)$ are the differential operators with respect to x and θ given in Appendix A. G represents the shear modulus of the material used for the elastic foundation and

K for the Winkler foundation modulus, and the expression for the differential operator ∇^2 is

$$\nabla^2 = \frac{\partial^2}{\partial x^2} + \frac{1}{R^2}\frac{\partial^2}{\partial \theta^2}. \tag{7}$$

The Winkler model is a special case of the Pasternak model when $G = 0$. The equation of motion of the fluid can be written in the cylindrical coordinate system (x, θ, r) as:

$$\frac{1}{r}\frac{\partial}{\partial r}\left(r\frac{\partial P}{\partial r}\right) + \frac{1}{r^2}\frac{\partial^2 P}{\partial \theta^2} + \frac{\partial^2 P}{\partial x^2} = \frac{1}{c^2}\frac{\partial^2 P}{\partial t^2}, \tag{8}$$

where t is the time, P is the acoustic pressure, and c is the speed of sound in the fluid.

Wave propagation approach has been employed by many researchers (Zhang et al. [22, 29, 30], Natsuki et al. [23], Li et al. [31], Liu et al. [32], and Li [28]) to evaluate the approximate solution of the shell dynamic equations. This numerical technique is used in this study as it is very simple and easily applicable to determine the shell frequencies. For separating the spatial and temporal variables, the following shapes of modal displacement functions are assumed as

$$\begin{aligned} u(x,\theta,t) &= A_m \cos(n\theta) e^{i(\omega t - k_m x)}, \\ v(x,\theta,t) &= B_m \sin(n\theta) e^{i(\omega t - k_m x)}, \\ w(x,\theta,t) &= C_m \cos(n\theta) e^{i(\omega t - k_m x)}. \end{aligned} \tag{9}$$

The coefficients A_m, B_m, C_m denote the wave amplitudes in the x, θ, and z directions, respectively. n denotes the circumferential waves number, ω is the natural angular frequency for the cylindrical shell, and k_m is the axial wave number that has been specified in the reference [18] for a number of boundary conditions. The acoustic pressure field in the cylindrical shell containing fluid, which satisfies the acoustic wave (8), can be expressed as

$$P = P_m \cos(n\theta) J_n(k_r r) e^{i(\omega t - k_m x)}, \tag{10}$$

where J_n is the Bessel function of first kind with order n, and k_r is radial wave number. Coupling condition of the fluid with the shell wall is given by

$$-\left\{\frac{1}{iw\rho_f}\right\}\left(\frac{\partial P}{\partial r}\right) = \frac{\partial w}{\partial t} \tag{11}$$

at $r = R$ and

$$P_m = \left[\frac{\omega^2 \rho_f}{k_r J_n'(k_r R)}\right] C_m, \tag{12}$$

where ρ_f stands for the density of the contained fluid and the prime on the J_n' represents the differentiation of the Bessel function with respect to the argument $k_r R$. By substituting the expressions for u, v, and w from (9) into (6) and simplifying the algebraic expressions and rearranging the terms, the shell frequency equation leads to the following eigenvalue form:

$$\begin{aligned} &\begin{pmatrix} S_{11} & S_{12} & S_{13} \\ -S_{12} & S_{22} & S_{23} \\ -S_{13} & S_{23} & S_{33} \end{pmatrix} \begin{pmatrix} A_m \\ B_m \\ C_m \end{pmatrix} \\ &= \omega^2 \begin{pmatrix} \rho h & 0 & 0 \\ 0 & \rho h & 0 \\ 0 & 0 & \rho h + \dfrac{\rho_f}{k_r}\dfrac{J_n(k_r R)}{J_n'(k_r R)} \end{pmatrix} \begin{pmatrix} A_m \\ B_m \\ C_m \end{pmatrix}, \end{aligned} \tag{13}$$

where S_{ij} $(i, j = 1, 2, 3)$ are some matrix coefficients depending on shell parameters and the type of boundary conditions specified at the ends of an FG cylindrical shell and are given in Appendix B. Equation (13) is solved for shell frequencies and mode shapes by using MATLAB software. The three frequencies are obtained corresponding to the axial, circumferential, and radial displacements.

3. Functionally Graded Materials

Functionally graded materials are advanced materials and are used in engineering and technology applications due to their mechanical properties. Their best use is found in the thermal environment for their superb properties. They are fabricated from two or more materials. The material properties of their constituents are functions of the temperature and the volume fractions. If P_i represents a material property of the ith constituent material of an FGM consisting of k constituent materials, then its effective material P is written as

$$P = \sum_{i=1}^{k} P_i V_i, \tag{14}$$

where V_i is the volume fraction of the ith constituent material. Also the sum of volume fractions of the constituent materials is equal to one, that is,

$$\sum_{i=1}^{k} V_i = 1. \tag{15}$$

The volume fraction depends on the thickness variable and is defined as

$$V_i = \left(\frac{z - R_i}{R_0 - R_i}\right)^N, \tag{16}$$

for a cylindrical shell. R_i and R_0 denote inner and outer radii of the shell and z is the thickness variable in the radial direction. N is known as power law exponent and is a nonnegative real number and lies between zero and infinity. When a cylindrical shell is considered to be consisting of two constituent functionally graded materials M_1 and M_2, the volume fraction V_1 of the outer shell surface is obtained from (16) as

$$V_1 = \left(\frac{z + 0.5h}{h}\right)^N, \tag{17}$$

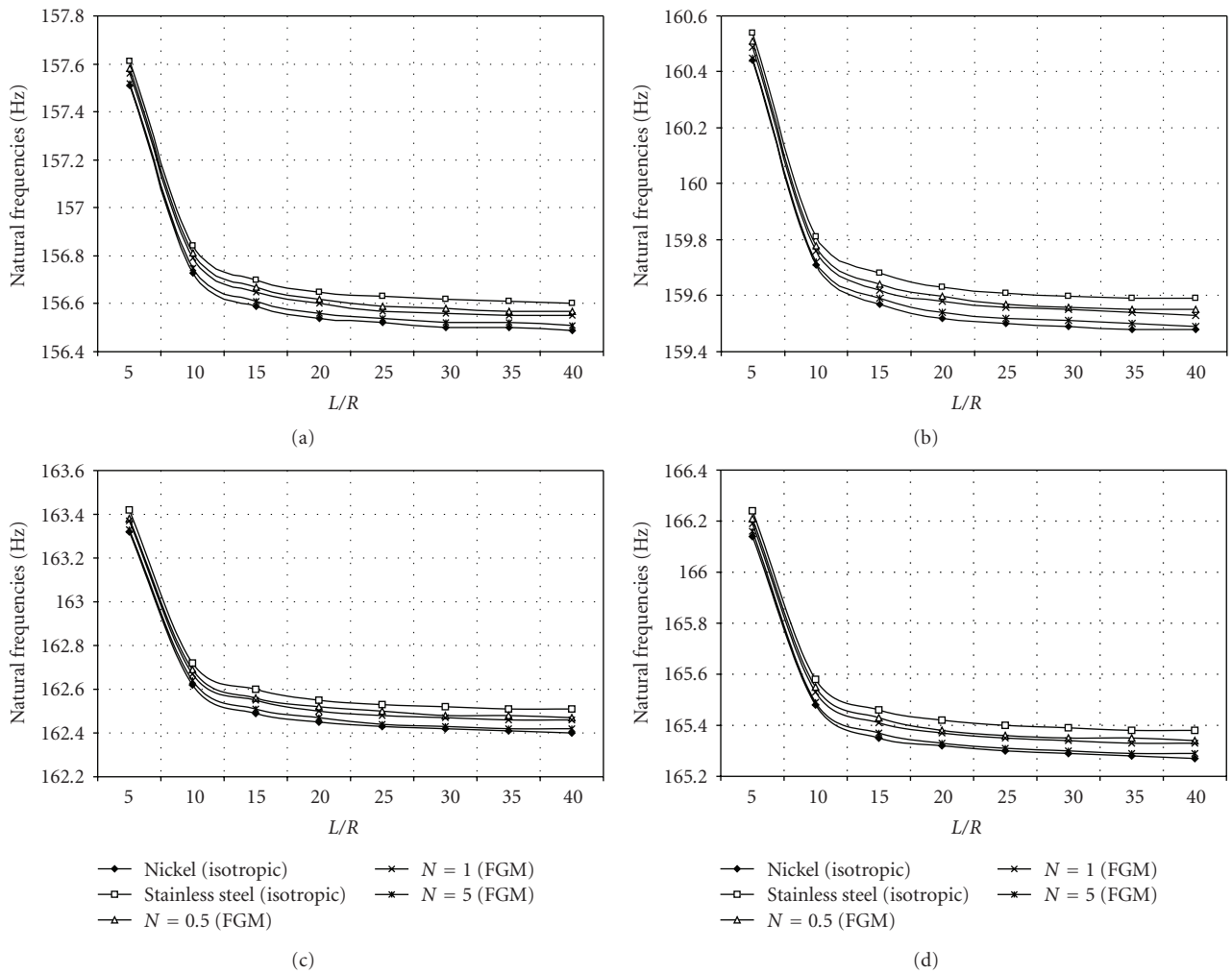

Figure 4: (a) Variation of natural frequencies (Hz) type I cylindrical shells with L/R ratio on elstic foundations for $m = 1$, $n = 4$, $h/R = 0.001$, $G = 1.5e + 7$, and $K = 1.5e + 7$. (b) Variation of natural frequencies (Hz) of type I fluid-filled cylindrical shells with L/R ratio for $m = 1$, $n = 4$, $h/R = 0.001$, $G = 1.5e + 7$, and $K = 2.5e + 7$. (c) Variation of natural frequencies (Hz) of fluid-filled type I cylindrical shells on elastic foundations for $m = 1$, $n = 4$, $h/R = 0.001$, $G = 1.5e + 7$, and $K = 3.5e + 7$. (d) Variation of natural frequencies (Hz) of fluid-filled type I cylindrical shell with L/R ratio on elastic founations for $m = 1$, $n = 4$, $h/R = 0.001$, $G = 1.5e + 7$, and $K = 4.5e + 7$.

where h is the shell uniform thickness. The effective Young's modulus E, Poisson's ratio ν, and the mass density ρ are given by

$$E = (E_1 - E_2)\left(\frac{z + 0.5h}{h}\right)^N + E_2,$$
$$\nu = (\nu_1 - \nu_2)\left(\frac{z + 0.5h}{h}\right)^N + \nu_2, \qquad (18)$$
$$\rho = (\rho_1 - \rho_2)\left(\frac{z + 0.5h}{h}\right)^N + \rho_2,$$

where E_1, E_2 are Young's moduli, ν_1, ν_2 Poisson's ratios, and ρ_1, ρ_2 the mass densities of the constituent materials M_1 and M_2, respectively. From the relations (18), the following things are noted, that is, at the inner surface the FGM properties are those of the constituent material M_2 and at the outer surface, they are those of material M_1. Thus the FGM properties change continuously from the material M_2 at the inner surface to the material M_1 at the outer surface.

4. Results and Discussions

In Table 1, a comparison of frequency parameter $\Omega = \omega R\sqrt{(1 - \nu^2)\rho/E}$ is made against circumferential wave number n with Loy et al. [6] for a simply-supported isotropic cylindrical shell with shell parameters $m = 1$, $L/R = 20$, $h/R = 0.01$, and $\nu = 0.3$. Table 2 shows the comparison of the variation of frequency parameter of isotropic cylindrical shells with circumferential wave number n and h/R ratio to that of Loy et al. [33] for simply-supported end condition having shell parameters ($m = 1$, $L/R = 20$). In Table 3, comparison of natural frequencies (Hz) for simply-supported type I and type II FGM cylindrical shell is made with Loy et al. [6] against circumferential wave number n for various

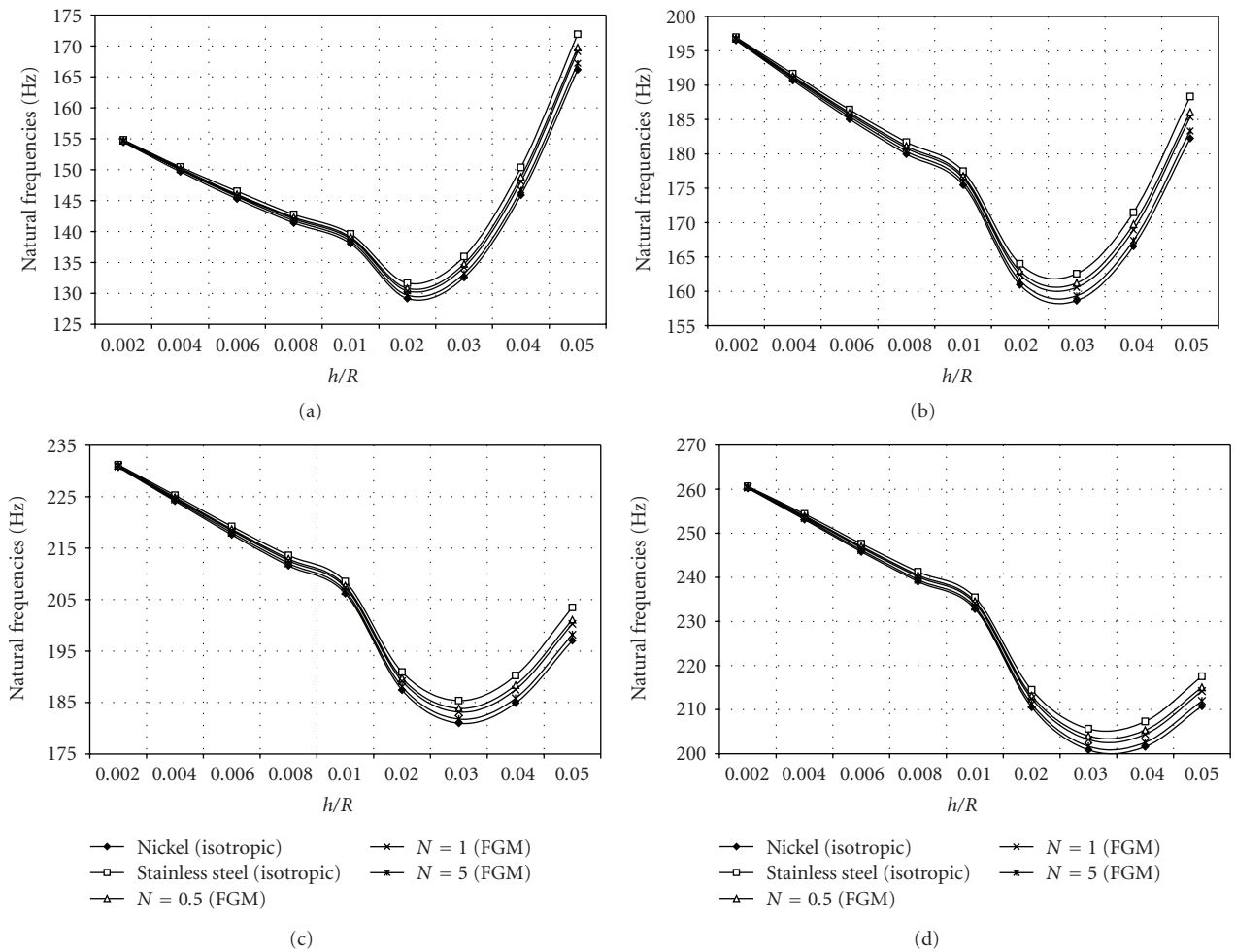

Figure 5: (a) Variation of natural frequencies (Hz) of fluid-filled type I cylindrical shell with h/R ratio on elastic foundations for $m = 1$, $n = 4$, $L/R = 20$, $K = 1.5e+7$, and $G = 1.5e+7$. (b) Variation of natural frequencies (Hz) of fluid-filled type I cylindrical shells with h/R ratio on elastic foundations for $m = 1$, $n = 4$, $L/R = 20$, $K = 1.5e+7$, and $G = 2.5e+7$. (c) Variation of natural frquencies (Hz) of fluid-filled type I cylindrical shell with h/R ratio on elastic foundations for $m = 1$, $n = 4$, $L/R = 20$, $K = 1.5e+7$, and $G = 3.5e+7$. (d) Variation of nautural frequencies (Hz) of fluid-filled type I cylindrical shell with h/R ratio on elastic foundations for $m = 1$, $n = 4$, $L/R = 20$, $K = 1.5e+7$, and $G = 4.5e+7$.

values of power law exponent $N = 0.5$, 2, and 15 with shell geometrical and material parameters ($m = 1$, $L/R = 20$, $h/R = 0.002$, and $\nu = 0.3$). It is observed that results agree very well with one another. This shows accuracy and validity of the present approach.

In Tables 4, 5, and 6, variations of natural frequencies (Hz) against circumferential wave number n are given for types I & II FG cylindrical shells on elastic foundation. Shells parameters are given in the tables. In Table 4, Pasternak foundation G is zero and Winkler foundation K is taken equal to 1.5×10^7. Values of exponential volume fraction law are $N = 0.5$, 0.7, 1, 2, 5, 15, and 30 in all cases. It is observed that frequencies of both shells increase vertically with increasing values of circumferential wave number n, whereas it slowly decreases for shell type I but increases for shell type II with increasing value of exponential volume fraction law. Frequency of the pure stainless steel is more than frequency of pure nickel. Frequency of FG cylindrical shell remains between the frequency of stainless steel and nickel when FG cylindrical shell is on elastic foundation in Tables 5 and 6; all parameters of shell are same as given in Table 4 but value of $K = 0$ and $G = 1.5 \times 10^7$. In this case, frequency increases rapidly with increasing values of circumferential wave number n as compared with frequency when $G = 0$, $K = 1.5 \times 10^7$. It means that influence of G is more than that of K on the shell frequencies. Here again frequencies decrease and increase with increasing values of power law exponent, N for shell types I & II, respectively, but remain between the frequencies of pure stainless steel and pure nickel. In Table 6, variation of natural frequencies (Hz) against circumferential wave number n is given when both K and G are nonzero. Natural frequencies increase rapidly with increasing value of circumferential wave number n but it decreases and increases with increasing values of N and it always remains between the frequencies of pure stainless steel and nickel.

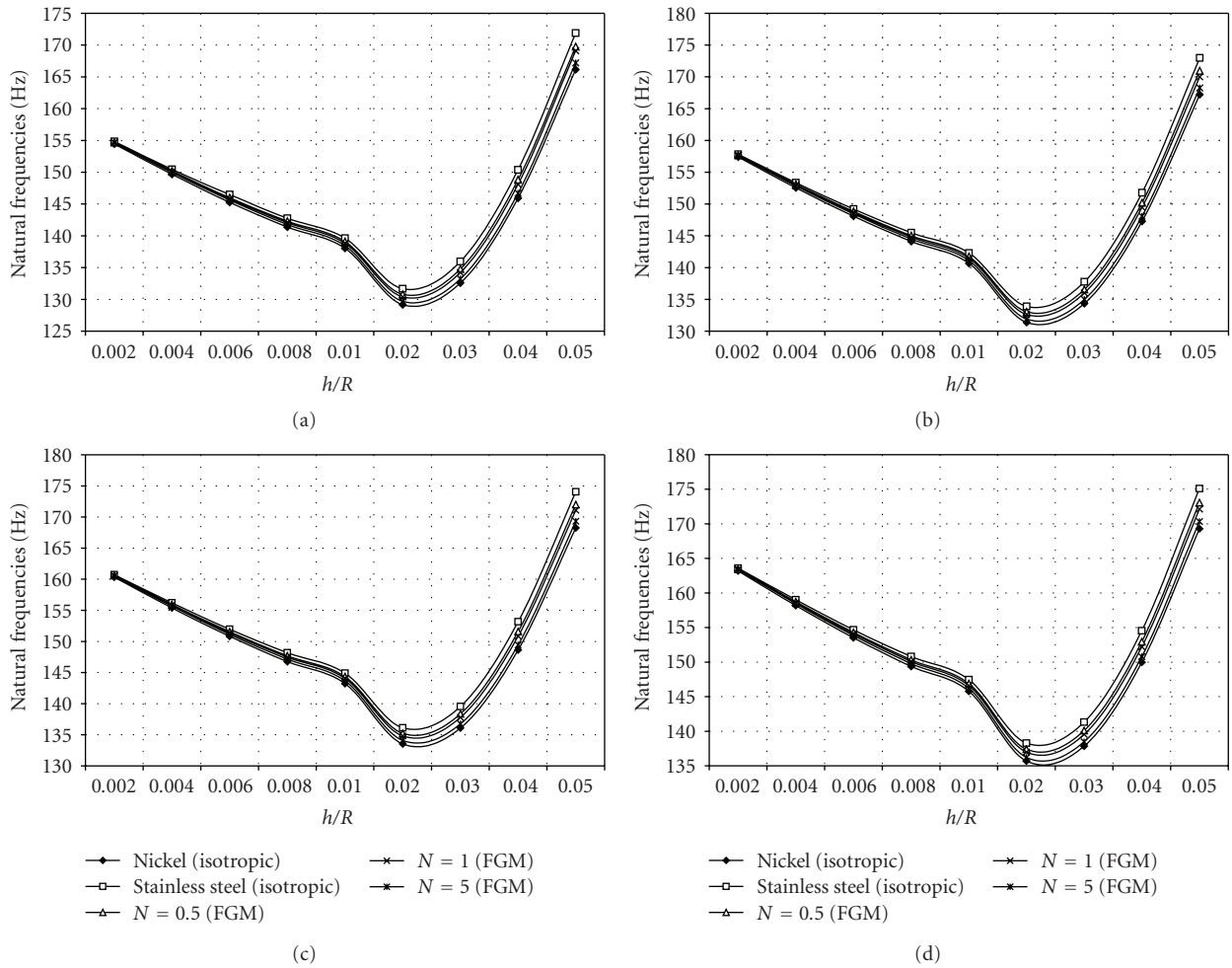

Figure 6: (a)Variation of natural frequencies (Hz) of fluid-filled type I cylindrical shell with h/R ratio on elastic foundations for $m = 1$, $n = 4$, $L/R = 20$, $G = 1.5e + 7$, $K = 1.5e + 7$. (b) Variation of natural frquencies (Hz) of fluid-filled type I cylindrical shells with h/R ratio on elastic foundation for $m = 1$, $n = 4$, $L/R = 20$, $G = 1.5e + 7$, $K = 2.5e + 7$. (c) Variation of natural frequecies (Hz) of fluid-filled type I cylindrical shells with h/R ratio on elastic founations for $m = 1$, $n = 4$, $L/R = 20$, $G = 1.5e + 7$, $K = 3.5e + 7$. (d) Variation of natural frequencies (Hz) of fluid-filled type I cylindrical shell based on elastic foundation for $m = 1$, $n = 4$, $L/R = 20$, $G = 1.5e + 7$, $K = 4.5e + 7$.

Table 3: Comparison of natural frequency for a simply-supported type I & II FGM cylindrical shells ($m = 1$, $L/R = 20$, $h/R = 0.002$, $\nu = 0.3$).

Shell	N	$N = 0.5$		$N = 2$		$N = 15$	
		Loy et al. [6]	Present	Loy et al. [6]	Present	Loy et al. [6]	Present
Type I	1	13.321	13.321	13.103	13.103	12.933	12.933
	2	4.5168	4.5162	4.4435	4.4433	4.3834	4.3829
	3	4.1911	4.1903	4.1235	4.1233	4.0653	4.0646
	4	7.0972	7.0967	6.9820	6.9819	6.8856	6.8851
	5	11.336	11.335	11.151	11.151	10.999	10.998
Type II	1	13.103	13.103	13.321	13.321	13.505	13.504
	2	4.4382	4.4376	4.5114	4.5104	4.5759	4.5754
	3	4.1152	4.1145	4.1827	4.1813	4.2451	4.2443
	4	6.9754	6.9749	7.0905	7.0897	7.1943	7.1938
	5	11.145	11.144	11.329	11.329	11.494	11.493

Table 4: Variation of natural frequencies (Hz) against circumferential wave number n of an empty FG cylindrical shell on elastic foundation. ($G = 0$, $K = 1.5 \times 10^7$) Types I ($m = 1$, $h/R = 0.002$, $L/R = 20$).

Shell	N	$N^{SS=0}$	$N^{N=0}$	$N = 0.5$	$N = 1$	$N = 2$	$N = 5$	$N = 15$	$N = 30$
Type I	1	107.24	102.72	105.66	104.91	104.16	103.43	102.98	102.85
	2	136.27	130.53	134.27	133.31	132.36	131.44	130.87	130.71
	3	144.71	138.61	142.58	141.56	140.55	139.57	138.97	138.79
	4	148.13	141.88	145.95	144.91	143.88	142.87	142.25	142.07
	5	150.00	143.67	147.80	146.73	145.69	144.67	144.05	143.86
Type II	1	107.24	102.72	104.16	104.91	105.67	106.45	106.94	107.09
	2	136.27	130.53	132.36	133.31	134.28	135.26	135.89	136.08
	3	144.71	138.61	140.55	141.56	142.58	143.63	144.30	144.49
	4	148.13	141.88	143.88	144.91	145.96	147.03	147.71	147.91
	5	150.00	143.67	145.69	146.74	147.80	148.88	149.58	149.78

Table 5: Variation of natural frequencies (Hz) against circumferential wave number n of an empty FG cylindrical shell on elastic foundation. ($G = 1.5 \times 10^7$, $K = 0$) Types I & II ($m = 1$, $h/R = 0.002$, $L/R = 20$).

Shell	n	$N^{SS=0}$	$N^{N=0}$	$N = 0.5$	$N = 1$	$N = 2$	$N = 5$	$N = 15$	$N = 30$
Type I	1	108.52	103.94	106.93	106.16	105.41	104.67	104.21	104.08
	2	272.69	261.20	268.69	266.76	264.87	263.01	261.87	261.55
	3	433.95	415.66	427.58	424.51	421.49	418.55	416.73	416.21
	4	591.79	566.85	583.11	578.92	574.81	570.79	568.32	567.61
	5	747.79	716.28	736.83	731.52	726.34	721.25	718.13	717.24
Type II	1	108.52	103.94	105.40	106.16	106.93	107.72	108.20	108.36
	2	272.69	261.20	264.87	266.76	268.69	270.67	271.93	272.30
	3	433.95	415.66	421.49	424.51	427.59	430.73	432.73	433.32
	4	591.79	566.85	574.81	578.92	583.12	587.41	590.13	590.93
	5	747.79	716.28	726.34	731.53	736.83	742.25	745.70	746.71

In Tables 7, 8, and 9, variations of natural frequencies (Hz) against circumferential wave number n of type I & II functionally graded fluid-filled cylindrical shells on elastic foundation are given. Parameters are given in the tables. In Table 7, $G = 0$ and $K = 1.5 \times 10^7$. Value of $K = 0$ and $G = 1.5 \times 10^7$ in Table 8, and $K = 1.5 \times 10^7$, $G = 1.5 \times 10^7$ in Table 9. In Table 7, it is observed that frequencies increase with circumferential wave number n. It decreases and increases very slowly with increasing value of N. It is observed that their frequencies remain within the frequencies of pure stainless steel and pure nickel fluid-filled cylindrical shells on elastic foundation, and it is also observed that frequency of fluid-filled FGM cylindrical shell is much less than that of empty FG cylindrical shell on the elastic foundation. Tables 8 and 9 also show that the influence of G is more than that of K when fluid-filled FG cylindrical shell is on elastic foundation. Frequency increases with increasing values of K and G. These tables show that influence of Pasternak foundation is more than that of Winkler foundation. Also it is clear that frequency of fluid-filled FG cylindrical shell is much less than that of empty FG cylindrical shell on elastic foundation.

Figure 2 shows a similar and opposite behaviour of the natural frequencies (Hz) of both the configurations of fluid-filled FGM type I & type II cylindrical shells for the same values of Winkler and Pasternak elastic foundations and shell parameters as shown in this figure. It is clear from this figure that natural frequencies of shell type I decrease while that of shell type II increase with the increasing values of power law exponent N. Rate of decrement of shell type I and increment of shell type II is the same for the ascending values of N and frequencies of both types of the shells seem to intersect at $N = 1$.

In Figures 3(a)–3(d), variation of natural frequencies (Hz) of fluid-filled isotropic as well as FGM type I cylindrical shells resting on elastic foundations is sketched against L/R ratio with shell parameters $m = 1$, $n = 4$, and $h/R = 0.001$, by keeping Winkler elastic modulus ($K = 1.5 \times 10^7$) constant and Pasternak elastic modulus G varied from 1.5×10^7 to 4.5×10^7 with 1×10^7class interval, respectively. Nickel and stainless steel are used in isotropic cylindrical shells, whereas these isotropic materials are also used in the fabrication of FGM cylindrical shells as constituents. Influence of G is studied in both isotropic and three FGM cylindrical shells corresponding to power law exponents $N = 0.5, 1, 5$, respectively.

It is observed from these figures that natural frequencies (Hz) of these cylindrical shells first decrease rapidly from $L/R = 5$ to $L/R = 10$, for $L/R > 10$ these frequencies decline very slowly by increasing values of L/R ratio. Natural frequencies of FG cylindrical shells always lie between the natural frequencies of isotropic cylindrical shells to which FG

Table 6: Variation of natural frequencies (Hz) against circumferential wave number n of an empty FG cylindrical shells on elastic foundation. ($G = 1.5 \times 10^7$, $K = 1.5 \times 10^7$) Types I & II ($m = 1$, $h/R = 0.002$, $L/R = 20$).

Shell	n	$N^{SS=0}$	$N^{N=0}$	$N = 0.5$	$N = 1$	$N = 2$	$N = 5$	$N = 15$	$N = 30$
Type I	1	151.25	144.86	149.02	147.95	146.89	145.87	145.23	145.05
	2	304.47	291.63	300.00	297.84	295.73	293.66	292.38	292.02
	3	457.28	438.00	450.57	447.33	444.15	441.04	439.14	438.58
	4	609.94	584.23	600.99	596.67	592.43	588.29	585.74	585.01
	5	762.56	730.43	751.38	745.97	740.68	735.50	732.32	731.40
Type II	1	151.25	144.86	146.89	147.95	149.02	150.12	150.82	151.03
	2	304.47	291.63	295.73	297.84	300.00	302.21	303.62	304.03
	3	457.28	438.00	444.15	447.33	450.57	453.89	455.99	456.61
	4	609.94	584.23	592.44	596.67	600.99	605.42	608.23	609.05
	5	762.56	730.43	740.69	745.98	751.39	756.91	760.43	761.46

Table 7: Variation of natural frequencies (Hz) against circumferential wave number n of fluid-filled FG cylindrical shell on elastic foundation. ($G = 0$, $K = 1.5 \times 10^7$) Types I & II ($m = 1$, $h/R = 0.002$, $L/R = 20$).

Shell	N	$N^{SS=0}$	$N^{N=0}$	$N = 0.5$	$N = 1$	$N = 2$	$N = 5$	$N = 15$	$N = 30$
Type I	1	19.244	19.217	19.234	19.230	19.226	19.221	19.219	19.218
	2	26.987	26.941	26.972	26.964	26.957	26.949	26.944	26.943
	3	32.863	32.788	32.837	32.825	32.813	32.800	32.792	32.790
	4	37.722	37.613	37.685	37.667	37.649	37.631	37.620	37.616
	5	41.954	41.806	41.903	41.879	41.855	41.721	41.815	41.811
Type II	1	19.244	19.217	19.226	19.231	19.235	19.240	19.243	19.244
	2	26.987	26.941	26.957	26.965	26.972	26.980	26.985	26.986
	3	32.863	32.788	32.813	32.825	32.838	32.850	32.858	32.860
	4	37.722	37.613	37.649	37.667	37.686	37.704	37.715	37.719
	5	41.954	41.806	41.856	41.880	41.905	41.929	41.945	41.949

cylindrical shells are fabricated. By increasing the values of G, natural frequencies of the all types of cylindrical shells are also considerable increased. It is further noted that for lower values of L/R ratio say $L/R < 5$, natural frequencies of the cylindrical shells seem to be converged but for higher values of L/R ratio these frequencies show diverging behaviour. Natural frequencies of isotropic cylindrical shell made with nickel are low as compared to that of stainless steel isotropic cylindrical shells for small value of G say 1.5×10^7, but for higher values of G say 4.5×10^7 this order of natural frequencies is changed. It is further observed that for small values of G say 1.5×10^7, natural frequencies of type I FGM cylindrical shells with lower values of power law exponent N are higher than those with higher values of N, but for higher values of G say 4.5×10^7, the order of frequencies of the FGM shells is reversed.

In Figures 4(a)–4(d), variation of natural frequencies (Hz) of fluid-filled isotropic as well as FGM type I cylindrical shells resting on elastic foundations is drawn with L/R ratio having shell parameters $m = 1$, $n = 4$, and $h/R = 0.001$, by keeping Pasternak elastic modulus ($G = 1.5 \times 10^7$) while Winkler elastic modulus K is varied from 1.5×10^7 to 4.5×10^7 with 1×10^7 class interval, respectively. Influence of K is studied on these cylindrical shells.

These figures have all the properties of Figures 3(a)–3(d) except that Winkler modulus does not affect the order of natural frequencies of isotropic as well as FGM cylindrical shells.

In Figures 5(a)–5(d), variation of natural frequencies (Hz) of fluid-filled isotropic as well as FGM type I cylindrical shells placed on elastic foundations is sketched against h/R ratio with shell parameters $m = 1$, $n = 4$, and $L/R = 20$, by taking Winkler elastic modulus ($K = 1.5 \times 10^7$) constant and Pasternak elastic modulus G varied from 1.5×10^7 to 4.5×10^7 with class interval 1×10^7. Influence of G is studied on the natural frequencies of these cylindrical shells.

It is observed from these figures that natural frequencies (Hz) of these cylindrical shells decrease simultaneously from $h/R = 0.002$ to $h/R = 0.01$, afterward it decreases sharply from $h/R = 0.01$ to 0.02, 0.025, 0.03, and 0.035 in figures 5(a)–5(d) respectively and afterwards these frequencies increase rapidly with h/R ratio. It is further noted that natural frequencies of FG cylindrical shells always lie between the natural frequencies of isotropic cylindrical shells to which FG cylindrical shells are fabricated. For lower values of G, natural frequencies of cylindrical shells with small h/R ratio are low as compared to high h/R ratio but for higher values of G, this order of frequencies is reversed with h/R ratio. For lower values of h/R ratio, natural frequencies of the cylindrical shells seem to be converged, but for higher values of h/R ratio, these frequencies show diverging behaviour. Natural frequencies (Hz) of isotropic cylindrical shell made

Table 8: Variation of natural frequencies (Hz) against circumferential wave number n of fluid-filled FG cylindrical shell on elastic foundation. ($G = 1.5 \times 10^7$, $K = 0$) Types I ($m = 1$, $h/R = 0.002$, $L/R = 20$).

Shell	n	$N^{SS=0}$	$N^{N=0}$	$N = 0.5$	$N = 1$	$N = 2$	$N = 5$	$N = 15$	$N = 30$
Type I	1	19.476	19.448	19.467	19.462	19.458	19.454	19.451	19.450
	2	53.996	53.915	53.969	53.956	53.942	53.929	53.920	53.918
	3	98.356	98.161	98.292	98.260	98.227	98.194	98.173	98.168
	4	150.25	149.87	150.12	150.06	150.00	149.93	149.89	149.88
	5	208.41	207.76	208.19	208.08	207.98	207.87	207.80	207.78
Type II	1	19.476	19.448	19.458	19.462	19.467	19.471	19.474	19.745
	2	53.996	53.915	53.942	53.956	53.969	53.983	53.991	53.994
	3	98.356	98.161	98.227	98.259	98.292	98.324	98.344	98.350
	4	150.25	149.87	150.00	150.06	150.13	150.19	150.23	150.24
	5	208.41	207.76	207.98	208.08	208.19	208.30	208.37	208.39

Table 9: Variation of natural frequencies (Hz) against circumferential wave number n of fluid-filled FG cylindrical shell on elastic foundation. ($G = 1.5 \times 10^7$, $K = 1.5 \times 10^7$) Types I & II ($m = 1$, $h/R = 0.002$, $L/R = 20$).

Shell	n	$N^{SS=0}$	$N^{N=0}$	$N = 0.5$	$N = 1$	$N = 2$	$N = 5$	$N = 15$	$N = 30$
Type I	1	27.235	27.201	27.224	27.218	27.213	27.207	27.203	27.202
	2	60.286	60.199	60.257	60.243	60.228	60.214	60.205	60.202
	3	103.62	103.41	103.55	103.51	103.48	103.45	103.42	103.42
	4	154.83	154.44	154.70	154.63	154.57	154.50	154.46	154.45
	5	212.49	211.83	212.27	212.16	212.05	211.94	211.87	211.85
Type II	1	27.235	27.201	27.213	27.218	27.224	27.230	27.233	27.234
	2	60.286	60.199	60.229	60.243	60.257	60.272	60.281	60.283
	3	103.62	103.41	103.48	103.52	103.55	103.58	103.60	103.61
	4	154.83	154.44	154.57	154.64	154.70	154.76	154.80	154.82
	5	212.49	211.83	212.06	212.17	212.27	212.38	212.45	212.47

with nickel are low as compared to that of stainless steel isotropic cylindrical shells for small value of G say 1.5×10^7; for higher values of G say 4.5×10^7, this order of natural frequencies remains the same. Similarly, natural frequencies of FG cylindrical shells with low value of power law exponent say $N < 1$ are higher in type I and lower in type II FGM cylindrical shells, whereas for higher value of power law exponent N say $N > 1$, the natural frequencies are lower for type I and higher in type II FGM cylindrical shells. It is clear from these figures that variation of G does not affect the order of natural frequencies of these cylindrical shells. It is further noted that for increasing values of G, natural frequencies of the cylindrical shells also increased; this rate of increment is higher for low values of h/R ratio than those of higher values of h/R ratio. It is further observed that for smaller values of G say 1.5×10^7, natural frequencies of type I & II FGM cylindrical shells with lower values of h/R ratio are smaller than those with higher values of h/R, but for higher values of G say 4.5×10^7, the order of frequencies of the FGM shells is reversed. It means that Pasternak modulus G has prominent effect on the natural frequencies of the cylindrical shells.

In Figures 6(a)–6(d), variation of natural frequencies (Hz) of fluid-filled isotropic as well as FGM type I cylindrical shells placed on elastic foundations is drawn with increasing values of h/R ratio having shell parameters $m = 1$, $n = 4$, $L/R = 20$, considering Pasternak elastic modulus ($G = 1.5 \times 10^7$) constant and Winkler elastic modulus K varied from 1.5×10^7 to 4.5×10^7 with class interval 1×10^7. Influence of K is studied on the natural frequencies of these cylindrical shells.

The same behaviour is observed as in Figures 5(a)–5(d) except that Winkler modulus K also has no effect on the order of natural frequencies of isotropic as well as FGM cylindrical shells. Natural frequencies of cylindrical shells increased with K but very slowly. Rate of increment for lower values of h/R ratio is the same for higher values of h/R ratio with increasing values of K. Rate of increment of natural frequencies of the cylindrical shells with Pasternak modulus G is very high as compared to Winkler modulus. It meansthat, Pasternak modulus G directly influences the natural frequencies of the cylindrical shells under considered. Similar and opposite behaviour of shell frequencies can be observed for FGM shell type II on elastic foundations.

5. Conclusion

In this study, vibration frequency analysis of empty as well as fluid-filled FGM cylindrical shells based on elastic foundations is presented for simply-supported boundary conditions. Wave propagation approach is used to derive the shell frequency equation in the form of the eigenvalue

problem including the elastic foundation and fluid loading terms. The influence of elastic moduli is more pronounced on the shell frequencies. The frequency of the fluid-filled FG cylindrical shell is much less than that of empty FG cylindrical shell based on elastic foundations.

Appendices

A. Differential Operators

$$
\begin{aligned}
L_{11} &= A_{11}\frac{\partial^2}{\partial x^2} + \frac{A_{66}}{R^2}\frac{\partial^2}{\partial \theta^2},\\
L_{12} &= \frac{(A_{12}+A_{66})}{R}\frac{\partial^2}{\partial x\partial\theta} + \frac{(B_{12}+2B_{66})}{R^2}\frac{\partial^2}{\partial x\partial\theta},\\
L_{13} &= \frac{A_{12}}{R}\frac{\partial}{\partial x} - B_{11}\frac{\partial^3}{\partial x^3} - \frac{(B_{12}+2B_{66})}{R^2}\frac{\partial^3}{\partial x\partial\theta^2},\\
L_{21} &= \frac{(A_{12}+A_{66})}{R}\frac{\partial^2}{\partial x\partial\theta} + \frac{(B_{12}+2B_{66})}{R^2}\frac{\partial^2}{\partial x\partial\theta},\\
L_{22} &= \left(A_{66} + \frac{3B_{66}}{R} + \frac{4D_{66}}{R^2}\right)\frac{\partial^2}{\partial x^2}\\
&\quad + \left(\frac{A_{22}}{R^2} + \frac{2B_{22}}{R^3} + \frac{D_{22}}{R^4}\right)\frac{\partial^2}{\partial\theta^2},\\
L_{23} &= \left(\frac{A_{22}}{R^2} + \frac{B_{22}}{R^3}\right)\frac{\partial}{\partial\theta} - \left(\frac{B_{22}}{R^3} + \frac{D_{22}}{R^4}\right)\frac{\partial^3}{\partial\theta^3}\\
&\quad - \left(\frac{B_{12}+2B_{66}}{R} + \frac{D_{12}+4D_{66}}{R^2}\right)\frac{\partial^3}{\partial x^2\partial\theta},\\
L_{31} &= -\frac{A_{12}}{R}\frac{\partial}{\partial x} + B_{11}\frac{\partial^3}{\partial x^3} + \left(\frac{B_{12}+2B_{66}}{R^2}\right)\frac{\partial^3}{\partial x\partial\theta^2},\\
L_{32} &= -\left(\frac{A_{22}}{R^2} + \frac{B_{22}}{R^3}\right)\frac{\partial}{\partial\theta} + \left(\frac{B_{22}}{R^3} + \frac{D_{22}}{R^4}\right)\frac{\partial^3}{\partial\theta^3}\\
&\quad + \left(\frac{B_{12}+2B_{66}}{R} + \frac{D_{12}+4D_{66}}{R^2}\right)\frac{\partial^3}{\partial x^2\partial\theta},\\
L_{33} &= -\frac{A_{22}}{R^2} + \frac{2B_{12}}{R}\frac{\partial^2}{\partial x^2} + \frac{2B_{22}}{R^3}\frac{\partial^2}{\partial\theta^2} - D_{11}\frac{\partial^4}{\partial x^4}\\
&\quad - 2\frac{D_{12}+2D_{66}}{R^2}\frac{\partial^4}{\partial x^2\partial\theta^2} - \frac{D_{22}}{R^4}\frac{\partial^4}{\partial\theta^4}.
\end{aligned}
\tag{A.1}
$$

B. Coefficients of the Stiffness Matrix

$$
\begin{aligned}
S_{11} &= A_{11}{k_m}^2 + \frac{n^2A_{66}}{R^2},\\
S_{12} &= ink_m\left(\frac{A_{12}+A_{66}}{R} + \frac{B_{12}+2B_{66}}{R^2}\right),\\
S_{13} &= ik_m\left(\frac{A_{12}}{R} + B_{11}{k_m}^2 + n^2\frac{B_{12}+2B_{66}}{R^2}\right),\\
S_{22} &= n^2\left(\frac{A_{22}}{R^2} + \frac{2B_{22}}{R^3} + \frac{D_{22}}{R^4}\right) + k_m^2\left(A_{66} + \frac{4B_{66}}{R} + \frac{4D_{66}}{R^2}\right),\\
S_{23} &= n\left(\frac{A_{22}}{R^2} + \frac{B_{22}}{R^3} + n^2\left(\frac{B_{22}}{R^3} + \frac{D_{22}}{R^4}\right)\right.\\
&\quad \left. + k_m^2\left(\frac{B_{12}+2B_{66}}{R} + \frac{D_{12}+4D_{66}}{R^2}\right)\right),\\
S_{33} &= \left(\frac{A_{22}}{R^2} + \frac{2B_{12}}{R}k_m^2 + 2n^2\frac{B_{22}}{R^3} + D_{11}{k_m}^4 + 2n^2{k_m}^2\right.\\
&\quad \left. \times\left(\frac{D_{12}+2D_{66}}{R^2}\right) + n^4\frac{D_{22}}{R^4} + K + G\left({k_m}^2 + \frac{n^2}{R^2}\right)\right).
\end{aligned}
\tag{B.1}
$$

References

[1] A. E. H. Love, "On the small free vibrations and deformations of a thin elastic shell," *Philosophical Transactions of the Royal Society A*, vol. 179, pp. 491–549, 1888.

[2] R. N. Arnold and G. B. Warburton, "Flexural vibrations of the walls of thin cylindrical shells," *Proceedings of the Royal Society A*, vol. 197, pp. 238–256, 1948.

[3] A. W. Leissa, "Vibration of shells," NASA SP-288, 1973, Reprinted by the Acoustical Society of America, American Institute of Physics, 1993.

[4] R. D. Blevins, *Formulas for Natural Frequency and Mode Shape*, Van Nostrand Reinhold, New York, NY, USA, 1979.

[5] S. Markus, *The Mechanics of Vibrations of Cylindrical Shells*, Elsevier, New York, NY, USA, 1988.

[6] C. T. Loy, K. Y. Lam, and J. N. Reddy, "Vibration of functionally graded cylindrical shells," *International Journal of Mechanical Sciences*, vol. 41, no. 3, pp. 309–324, 1999.

[7] S. C. Pradhan, C. T. Loy, K. Y. Lam, and J. N. Reddy, "Vibration characteristics of functionally graded cylindrical shells under various boundary conditions," *Applied Acoustics*, vol. 61, no. 1, pp. 111–129, 2000.

[8] M. N. Naeem, *Vibrational frequency analysis of non-rotating and rotating FGM circular cylindrical shells*, Ph.D. thesis, UMIST, Manchester, UK, April 2002.

[9] M. M. Najafizadeh and M. R. Isvandzibaei, "Vibration of functionally graded cylindrical shells based on higher order shear deformation plate theory with ring support," *Acta Mechanica*, vol. 191, no. 1-2, pp. 75–91, 2007.

[10] S. H. Arshad, M. N. Naeem, and N. Sultana, "Frequency analysis of functionally graded material cylindrical shells with various volume fraction laws," *Proceedings of the Institution of Mechanical Engineers, Part C*, vol. 221, no. 12, pp. 1483–1495, 2007.

[11] A. G. Shah, T. Mahmood, and M. N. Naeem, "Vibrations of FGM thin cylindrical shells with exponential volume fraction law," *Applied Mathematics and Mechanics*, vol. 30, no. 5, pp. 607–615, 2009.

[12] S. H. Arshad, M. N. Naeem, N. Sultana, A. G. Shah, and Z. Iqbal, "Effects of exponential volume fraction law on the natural frequencies of FGM cylindrical shells under the influence of various boundary conditions," *Archive of Applied Mechanics*. In press.

[13] S. H. Arshad, M. N. Naeem, N. Sultana, A. G. Shah, and Z. Iqbal, "Vibration analysis of bi-layered FGM cylindrical

shells," *Archive of Applied Mechanics*, vol. 81, no. 3, pp. 319–343, 2010.

[14] S. H. Arshad, M. N. Naeem, N. Sultana, Z. Iqbal, and A. G. Shah, "Vibration of bilayered cylindrical shells with layers of different materials," *Journal of Mechanical Science and Technology*, vol. 24, no. 3, pp. 805–810, 2010.

[15] M. C. Junger, "Radiation loading of cylindrical and spherical surfaces," *Journal of the Acoustical Society of America*, vol. 24, pp. 288–289, 1952.

[16] M. C. Junger, "Vibration of elastic shells in a fluid medium and the associated radiation of sound," *Journal of Applied Mechanics*, vol. 74, pp. 439–445, 1952.

[17] H. Chung, P. Turula, T. M. Mulcahy, and J. A. Jendrzejczyk, "Analysis of a cylindrical shell vibrating in a cylindrical fluid region," *Nuclear Engineering and Design*, vol. 63, no. 1, pp. 109–120, 1981.

[18] P. B. Goncalves and R. C. Batista, "Frequency response of cylindrical shells partially submerged or filled with liquid," *Journal of Sound and Vibration*, vol. 113, no. 1, pp. 59–70, 1987.

[19] M. Amabili, "Free vibration of partially filled, horizontal cylindrical shells," *Journal of Sound and Vibration*, vol. 191, no. 5, pp. 757–780, 1996.

[20] M. Amabili, "Vibrations of circular tubes and shells filled and partially immersed in dense fluids," *Journal of Sound and Vibration*, vol. 221, no. 4, pp. 567–585, 1999.

[21] C. B. Sharma, M. Darvizeh, and A. Darvizeh, "Natural frequency response of vertical cantilever composite shells containing fluid," *Engineering Structures*, vol. 20, no. 8, pp. 732–737, 1998.

[22] X. M. Zhang, G. R. Liu, and K. Y. Lam, "Coupled vibration analysis of fluid-filled cylindrical shells using the wave propagation approach," *Applied Acoustics*, vol. 62, no. 3, pp. 229–243, 2001.

[23] T. Natsuki, Q. Q. Ni, and M. Endo, "Vibrational analysis of fluid-filled carbon nanotubes using the wave propagation approach," *Applied Physics A*, vol. 90, no. 3, pp. 441–445, 2008.

[24] Z. Iqbal, M. N. Naeem, and N. Sultana, "Vibration characteristics of FGM circular cylindrical shells using wave propagation approach," *Acta Mechanica*, vol. 208, no. 3-4, pp. 237–248, 2009.

[25] A. G. Shah, T. Mahmood, M. N. Naeem, Z. Iqbal, and S. H. Arshad, "Vibrations of functionally graded cylindrical shells based on elastic foundations," *Acta Mechanica*, vol. 211, no. 3-4, pp. 293–307, 2010.

[26] D. N. Paliwal, R. K. Pandey, and T. Nath, "Free vibrations of circular cylindrical shell on Winkler and Pasternak foundations," *International Journal of Pressure Vessels and Piping*, vol. 69, no. 1, pp. 79–89, 1996.

[27] D. N. Paliwal and R. K. Pandey, "The free vibration of a cylindrical shell on an elastic foundation," *Journal of Vibration and Acoustics*, vol. 120, no. 1, pp. 63–71, 1998.

[28] X. Li, "Study on free vibration analysis of circular cylindrical shells using wave propagation," *Journal of Sound and Vibration*, vol. 311, no. 3–5, pp. 667–682, 2008.

[29] X. M. Zhang, G. R. Liu, and K. Y. Lam, "Vibration analysis of thin cylindrical shells using wave propagation approach," *Journal of Sound and Vibration*, vol. 239, no. 3, pp. 397–403, 2001.

[30] X. M. Zhang, "Frequency analysis of submerged cylindrical shells with the wave propagation approach," *International Journal of Mechanical Sciences*, vol. 44, no. 7, pp. 1259–1273, 2002.

[31] B. R. Li, X. Y. Wang, H. L. Ge, and Y. M. Ding, "Study on applicability of modal analysis of thin finite length cylindrical shells using wave propagation approach," *Journal of Zhejiang University: Science*, vol. 6, no. 10, pp. 1122–1127, 2005.

[32] J. X. Liu, T. Y. Li, T. G. Liu, and J. Yan, "Vibration characteristic analysis of buried pipes using the wave propagation approach," *Applied Acoustics*, vol. 66, no. 3, pp. 353–364, 2005.

[33] C. T. Loy, K. Y. Lam, and C. Shu, "Analysis of cylindrical shells using generalized differential quadrature," *Shock and Vibration*, vol. 4, no. 3, pp. 193–198, 1997.