Hindawi Publishing Corporation
Chinese Journal of Engineering
Volume 2014, Article ID 643521, 5 pages
http://dx.doi.org/10.1155/2014/643521

*Research Article*

# Experimental Investigation on Usage of Palm Oil as a Lubricant to Substitute Mineral Oil in CI Engines

**K. S. V. Krishna Reddy, Naval Kabra, Umesh Kunchum, and T. Vijayakumar**

*School of Mechanical and Building Science, VIT University, Vellore, Tamil Nadu 632014, India*

Correspondence should be addressed to T. Vijayakumar; vijayakumar.t@vit.ac.in

Received 6 November 2013; Accepted 5 December 2013; Published 14 January 2014

Academic Editors: Y. Feng and Y.-L. Zhang



Due to growing environmental concerns, vegetable oils are finding their way into lubricants for industrial and transportation applications. The substitution of mineral oil with vegetable oil as a base stock for an environment friendly lubricant in a CI engine is explored in this study without adding any additives. The experiments have been conducted with a mixture of palm oil and mineral oil, at different compositions. Blends of palm oil and mineral oil in different compositions, 0, 25, and 50 (by vol %) were added to base SAE20W40 mineral oil to obtain different lubricant blends. The parameters evaluated include brake thermal efficiency, brake specific fuel consumption, volumetric efficiency, and mechanical efficiency and exhaust emissions. The engine performance and emission tests were carried out on a single cylinder, water cooled, 4-stroke CI engine. Compared to mineral oil, the palm oil-based lubricant revealed appreciable expedience on engine and emission performance.

## 1. Introduction

Vegetable oil lubricants provide a renewable source of environmentally friendly lubricants, relating to the lubricant's ability to biodegrade into harmless products. Recently there has been an increased concern in enhancing the use of biodegradable vegetable oils in lubricants, mostly by environmental as well as health and safety issues, emerging due to changes in economic and supply factors.

From the viewpoint of emissions, biodegradable lubricants are expected to behave differently from conventional lubricants, mainly with respect to SOF emissions (soluble organic fraction of particulate emissions). Polycyclic aromatic hydrocarbons, which are absent in vegetable oils, pose a great contingency to human health. Vegetable oils are also low in potential pollutants like sulphur-containing compounds which can damage both environment and catalytic converter.

The advantages of vegetable oils as base oil in lubricants as compared to mineral oils are nontoxicity, biodegradability, resource renewability, affordable application cost, high viscosity index, and so forth. Vegetable oils are usually much cheaper than ester based oils and therefore provide more potential for the successful implementation as lubricants in base oil.

*1.1. Literature Review.* Many researchers have worked on these methods, with positive results.

Cheenkachorn and Fungtammasan [1] investigated the use of palm oil as base oil for an environmentally friendly lubricant for small four-stroke motorcycle engines. Their study showed that, compared to mineral-based commercial oil, the palm oil-based lubricant showed superior tribological properties but offers no significant advantage on engine and emission performance. Masjuki et al. [2] carried out a comparative study of wear, friction, viscosity, lubricant degradation, and exhaust emissions with palm oil and commercial lubricating oil. Their results revealed that the palm oil-based lubricating oil exhibited better performance in terms of wear and that the commercial oil exhibited better performance in terms of friction. However, the palm oil-based lubricant was more effective in reducing the emission levels of CO and hydrocarbon.

Schramm [3] carried out emission measurements on a chassis dynamometer to compare the emissions of CO, $CO_2$,

$NO_x$, THC, PM, and lubricant-SOF from diesel vehicle, lubricant and fuel consumption were also carried out. They operated the vehicle on conventional crude oil-based fuels and alternative fuels. Lubricant samples were taken from the engine crankcase after driving 7500 km on the road and were analysed in order to evaluate biodegradability of the used lubricant and engine wear. Boehman et al. [4] have demonstrated the benefits for particulate reduction provided by vegetable oil lubricants, which were derived from renewable resource materials. They carried out the experiment on single cylinder engine with and without thermal barrier coated components, with petroleum based lubricants and a vegetable oil lubricant for comparison purpose. Also their four-ball wear test data on this vegetable oil formulation showed similar or improved wear friction characteristics when compared with commercial petroleum and synthetic lubricants.

Bekal and Bhat [5] investigated the substitution of mineral oil with vegetable oil as a lubricant in a CI engine. Their experiments were conducted with neat pongamia oil and blend of pongamia oil and mineral oil (50% V/V) in different proportions. For various combinations of fuel and lubricant, $NO_x$, smoke, CO, HC, BSEC, EGT, and FP were compared. They recorded best results for the fuel-lubricant combination.

Durak [6] carried out experiment on using vegetable oil as alternative lubricating oil candidate, using Turkish originated rapeseed oil in different concentrations by volume percent with base oil. The author studied the effect of rapeseed oil as additive to mineral oil on specially designed experimental system and compared the lubricating oil in journal bearings. His experiments revealed that addition of rapeseed oil to mineral-based lubricant reduces the friction coefficient in journal even at high temperature.

Navindgi et al. [7] carried the performance parameters and emissions of a CI engine fuelled with straight vegetable oils of neem, mahua, linseed, and castor oil. They found out that the process of transesterification is found to be effective way of decreasing viscosity and eliminating operational and durability problems of vegetable oils. The performance parameters evaluated include thermal efficiency, BSFC, BSEC, and exhaust gas temperature and emissions smoke. Significant improvements have been observed in the performance parameters of the engine as well as exhaust emissions with use of neem, mahua, and castor oil as compared to baseline data of diesel.

Hassan et al. [8] had done research work on the possibility of producing lubricating oil from vegetable oil with palm oil. Physical and chemical properties such as viscosity, flash/fire point, pour point, and specific gravity were analysed. Bleached sample was tested to determine the above mentioned properties. Finally, it was revealed that the crude palm oil and the bleached sample exhibit a good base as a lubricant.

The objective was to investigate the usability of palm oil (25% and 50% blend with mineral oil SAE20W40) as a base in the formulation of an environmentally friendly lubricant for 4-stroke diesel engines and to study the variation in the performance and emission characteristics of the diesel engine due to the blended lubricants at different load conditions.

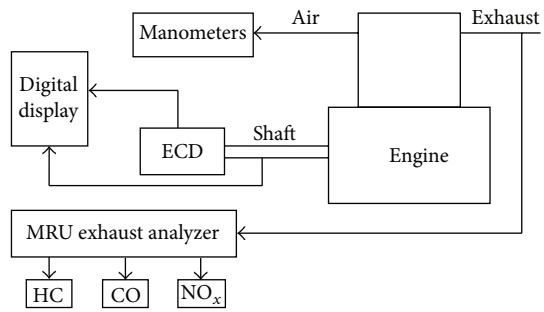


Figure 1: Block diagram of engine test bench and the experimental setup.

Table 1: Engine specifications.

| Make | Kirloskar |
|---|---|
| Model | AV1 |
| Cycle | 4 strokes |
| Rated power | 3.75 kW (5HP) |
| Speed | 1500 rpm |
| Bore diameter | 80 mm |
| Stroke length | 110 mm |
| Cooling system | Water cooled |
| Cubic capacity | 0.661 litres |
| Ignition system | Compression ignition |
| Compression ratio | 17.5 : 1 |
| Lubricating oil specification | K-oil DEO or SAE 20W40 |
| Lubricating oil capacity | 3.7 litres |

Table 2: Composition of lubricating oils.

| Blends no. | Compositions (vol%) | |
|---|---|---|
| | % Mineral oil (SAE 20W40) | % Palm oil |
| 1 | 100 | 0 |
| 2 | 75 | 25 |
| 3 | 50 | 50 |

## 2. Experimental Study

The engine used for the investigation is Kirloskar, AV1, single cylinder, 4-stroke, water cooled, high speed diesel engine. The Kirloskar engine is mounted on the ground. The test engine was directly coupled to an Eddy current dynamometer with control facility for loading the engine. The experimental setup is shown in Figure 1. The specifications of the engine are shown in Table 1.

*2.1. Experimental Methodology.* The aim of this experimental study was to investigate an appropriate composition of a palm oil and mineral oil mixture that may be used as a biodegradable lubricant for 4-stroke CI engines. The various blends of mixtures used are as in Table 2. The physical properties of 20W40 and palm oil are shown in Table 3. Engine performance and emission tests of the selected blends were performed on the Kirloskar, single cylinder, CI engine. In

Table 3: Physical characteristics of SAE 20W40 and palm oil.

| Typical properties | SAE 20W40 | Palm oil |
|---|---|---|
| Specific gravity @ 20°C | 0.855 | 0.865 |
| Kinematic viscosity, cSt @ 40°C | 120 | 40.24 |
| Kinematic viscosity, cSt @ 100°C | 14–16 | 7.89 |
| Viscosity index, | 110 | 188 |
| Flash point, °C | 220 | 280 |
| Pour point, °C | −21 | 9 |

each case the tests have been carried out at 0%, 20%, 40%, 60%, 80%, and 100% loading conditions. The exhaust gas was analysed for CO, $CO_2$, $NO_x$, and HC through the exhaust gas analyzer with specifications as shown in Table 4.

Table 4: Specifications of exhaust gas analyser.

| Model no. | QRO-402 | |
|---|---|---|
| Measuring range | CO: 0.00–9.99 | HC: 0–20000 ppm |
| | $CO_2$: 0.00–20.0% | $O_2$: 0.0–25.0% |
| | $\lambda$: 0–2.0 | AFR: 0.0–99.0 |
| Operating temperature | 0–40°C | |

## 3. Results and Discussion

The experiments were conducted with various combinations of palm oil blends and straight mineral base SAE 20W40 oil. The parameters, such as mechanical efficiency, exhaust gas temperature (EGT), brake thermal efficiency (BTE), brake specific fuel consumption (BSFC), and exhaust gas emissions were determined.

*3.1. Mechanical Efficiency.* Figure 2 shows variation of mechanical efficiency with respect to percentage loads for SAE 20W40 and different palm oil blends. Maximum mechanical efficiency is 54.92% with 100% mineral oil, 52.45% for 25% palm oil, and 54% for 50% palm oil. With the increase in palm oil percentage the mechanical efficiency is almost the same as that when the engine is operating with mineral oil alone. The decrease in mechanical efficiency can be observed initially due to increase in friction power as the palm oil percentage is less compared to mineral oil.

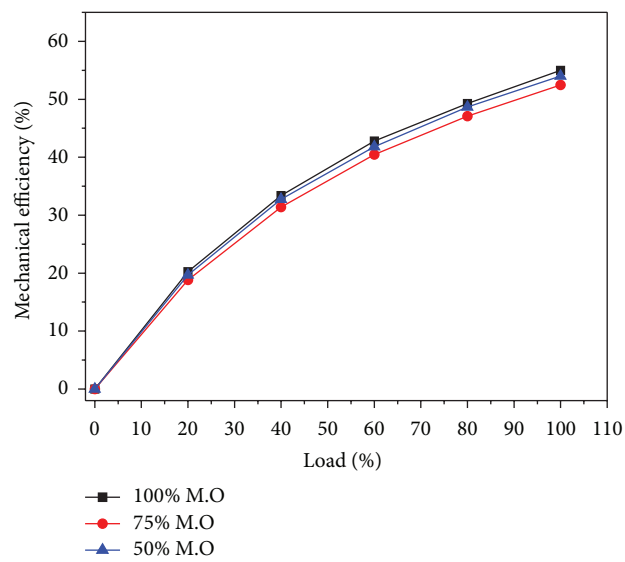


Figure 2: Mechanical efficiency versus load.

*3.2. Brake Thermal Efficiency.* Figure 3 shows variation in brake thermal efficiency with loading conditions for SAE 20W40 and different composition of palm oil. Brake thermal efficiency of SAE 20W40 is very close to various palm oil blends for entire range of operations. Maximum brake thermal efficiency for SAE 20W40 is 33.8% and 34.61% for 25% palm oil and 34.92% for 50% palm oil which is 3% increase with that of the mineral oil.

*3.3. Brake Specific Fuel Consumption.* Figure 4 shows variation of brake specific fuel consumption with loading conditions for SAE 20W40 and different compositions of palm oil. The graph reveals that there is no convincing change in the fuel consumption compared to palm oil blends.

*3.4. HC and $NO_x$ Emissions.* From Figure 5, it is clearly observed that the $NO_x$ emissions in case of mineral oil are more compared to the blends of palm oil and mineral oil. 25% palm oil blend is superior compared to 50% palm oil blend to reduce the $NO_x$ emissions. Also there is no significant variation in HC emissions in case of 100% mineral oil and 25% palm oil blend, but with 50% palm oil blend HC emissions are slightly reduced.

*3.5. CO Emissions.* From Figure 6, initially there is wide variation in CO levels but goes on reducing and converging with the increase in loading conditions. Also at full load conditions for 50% palm oil blend the CO emission levels are less compared to other blends.

## 4. Conclusion

The formulated blends of palm oil show similar properties compared to commercial SAE 20W40 oil in terms of mechanical efficiency, brake thermal efficiency, and brake specific fuel consumption (BSFC). The engine performance and fuel consumption for both lubricants showed no appreciable difference either. The study revealed that by using blends

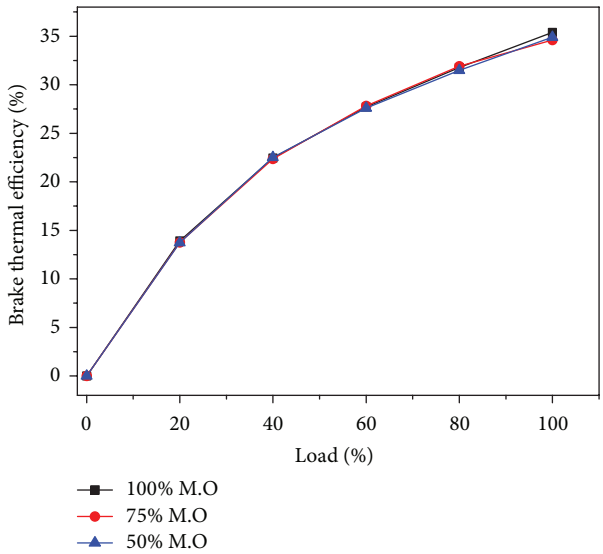


Figure 3: Brake thermal efficiency versus load.

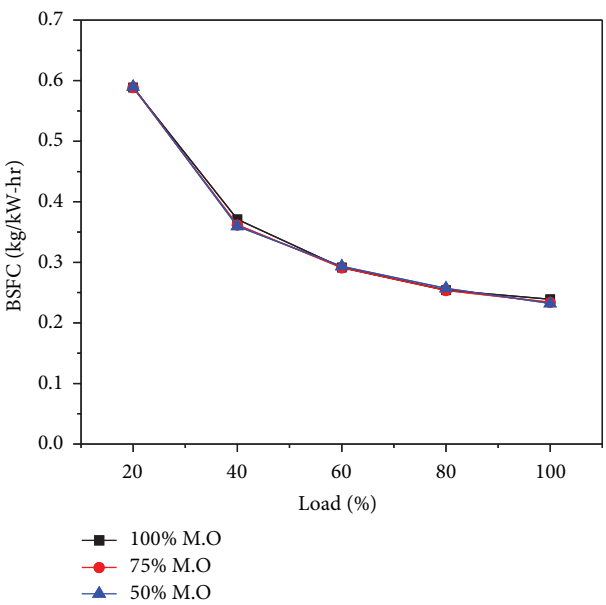


Figure 4: Brake specific fuel consumption versus load.

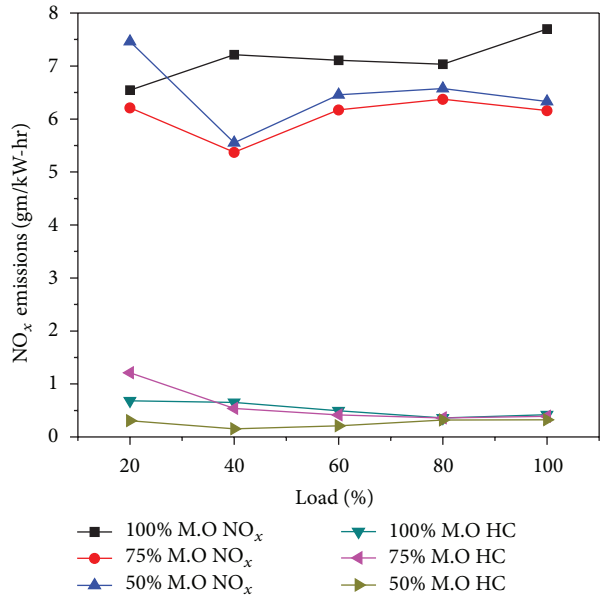


Figure 5: HC and $NO_x$ versus load.

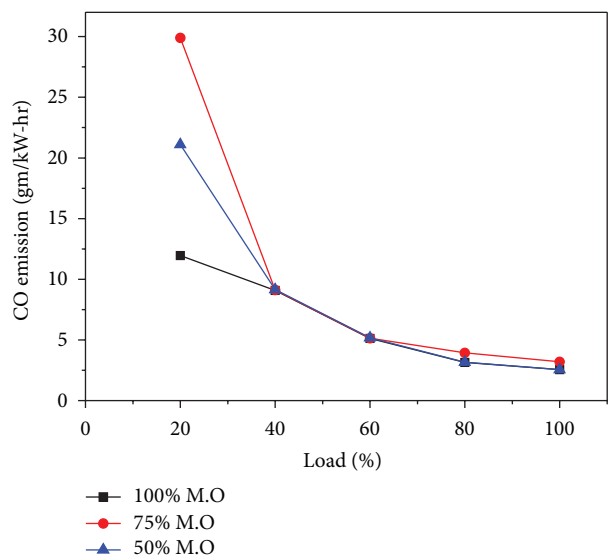


Figure 6: CO emissions versus load.

of 25% palm oil the $NO_x$ emission levels are reduced as compared to mineral oil. Also the palm oil-based lubricant is derived from a renewable and lower carbon source; this blended formulation could potentially be considered a good alternative to mineral oil-based lubricants. Since the cost of palm oil based lubricating oil is much lower than the SAE 20W40 mineral oil, the palm oil provides more potential for the successful utilization as base for lubricant oil.

## Conflict of Interests

The authors of the paper do not have any direct financial relation that might lead to a conflict of interest for any of the authors.

## References

[1] K. Cheenkachorn and B. Fungtammasan, "Development of engine oil using palm oil as a base stock for four-stroke engines," *Energy*, vol. 35, no. 6, pp. 2552–2556, 2010.

[2] H. H. Masjuki, M. A. Maleque, A. Kubo, and T. Nonaka, "Palm oil and mineral oil based lubricants—their tribological and emission performance," *Tribology International*, vol. 32, no. 6, pp. 305–314, 1999.

[3] J. Schramm, "Application of a biodegradable lubricant in a diesel vehicle," SAE Paper No. 2003-01-3111, 2003.

[4] A. L. Boehman, W. H. Swain, D. E. Weller, and J. M. Perez, "Use of vegetable oil lubricant in a low heat rejection engine to reduce particulate emissions," SAE Paper No. 980887, 1998.

[5] S. Bekal and N. R. Bhat, "Bio-lubricant as an alternative to mineral oil for a CI engine—an experimental investigation with pongamia oil as a lubricant," *Energy Sources A*, vol. 34, no. 11, pp. 1016–1026, 2012.

[6] E. Durak, "A study on friction behavior of rapeseed oil as an environmentally friendly additive in lubricating oil," *Industrial Lubrication and Tribology*, vol. 56, no. 1, pp. 23–37, 2004.

[7] M. C. Navindgi, M. Dutta, and B. S. P. Kumar, "Performance evaluation, emission characteristics and economic analysis of four non-edible straight vegetable oils on a single cylinder CI engine," *ARPN Journal of Engineering and Applied Sciences*, vol. 7, no. 2, 2012.

[8] A. B. Hassan, M. S. Abolarin, A. Nasir, and U. Ratchel, "Investigation on the use of palm olein as lubrication oil," *Leonardo Electronic Journal of Practices and Technologies*, no. 8, pp. 1–8, 2006.