Hindawi Publishing Corporation
Game Theory
Volume 2014, Article ID 937070, 11 pages
http://dx.doi.org/10.1155/2014/937070

Research Article

On Perfect Nash Equilibria of Polymatrix Games

Slim Belhaiza[1,2]

[1] *Department of Mathematics and Systems Engineering, MSB-MedTech, 1053 Les Berges du Lac II, Tunisia*
[2] *Department of Mathematics and Statistics, KFUPM, Dhahran 31261, Saudi Arabia*

Correspondence should be addressed to Slim Belhaiza; slim.belhaiza@gerad.ca

Received 29 May 2014; Accepted 10 September 2014; Published 29 September 2014

Academic Editor: Walter Briec

When confronted with multiple Nash equilibria, decision makers have to refine their choices. Among all known Nash equilibrium refinements, the *perfectness* concept is probably the most famous one. It is known that weakly dominated strategies of two-player games cannot be part of a perfect equilibrium. In general, this *undominance* property however does not extend to n-player games (E. E. C. van Damme, 1983). In this paper we show that polymatrix games, which form a particular class of n-player games, verify the undominance property. Consequently, we prove that every perfect equilibrium of a polymatrix game is undominated and that every undominated equilibrium of a polymatrix game is perfect. This result is used to set a new characterization of perfect Nash equilibria for polymatrix games. We also prove that the set of perfect Nash equilibria of a polymatrix game is a finite union of convex polytopes. In addition, we introduce a linear programming formulation to identify perfect equilibria for polymatrix games. These results are illustrated on two small game applications. Computational experiments on randomly generated polymatrix games with different size and density are provided.

1. Introduction

Interest for game theoretic applications has been growing in engineering, management and political sciences. A *polymatrix game* is a confrontation of n players ($n \geq 2$) in a normal and noncooperative context. Polymatrix games form a particular class of n-player games. A polymatrix game $G[(A_{ij})_{i\neq j}]$ with n players is such that player i's payoff relative to player j's decisions is independent from the remaining players' choices. Considering $N = \{1, \ldots, n\}$ as the set of all players, each player $i \in N$ controls a finite set of pure strategies $S_i = \{s_i^1, \ldots, s_i^{m_i}\}$ with $|S_i| = m_i$. We define $m = \sum_{i\in N} m_i$.

1.1. Literature Review. The Nash equilibrium concept [1] has often been presented as the most desirable solution for games. Authors like Avis and Fukuda [2] and Audet et al. [3, 4] presented computational methods to enumerate all Nash extreme points for two-player games. Some other authors like Daskalakis et al. [5] and Hazan and Krauthgamer [6] have recently studied the Nash equilibrium computation complexity problem, also for two-player games. Etessami and Yannakakis [7] studied the complexity of computing approximated Nash equilibria for three or more players finite games. Some pioneering results on polymatrix games are to be mentioned. The *complementary pivoting method* was used by Yanovskaya [8] to compute polymatrix game equilibria. Howson [9], Eaves [10], and Howson and Rosenthal [11] also adopted the same approach. Quintas [12] showed that the set of Nash equilibrium points in a polymatrix game is a finite union of convex polytopes. Miller and Zucker [13] showed how to reduce the polymatrix game equilibria problem to a copositive-plus linear complementarity problem (LCP) solvable with a single application of Lemke's algorithm [14]. Wilson [15] extended the Lemke and Howson algorithm [16] for finding a Nash equilibrium of a two-player game to n-player games. Govindan and Wilson [17] used sequences of polymatrix games to approximate and compute Nash equilibrium for n-player games. We addressed the problem of enumeration of all polymatrix game Nash extreme equilibria in Audet et al. [4]. Papadimitriou and Roughgarden [18] showed that computing a correlated equilibrium of a polymatrix game can be done in polynomial time.

1.2. Motivation. Decision makers, confronted to multiple Nash equilibria, have to refine their choices using other

rational concepts in addition to the concept of Nash equilibrium. Game theorists introduced many refinement concepts. Among all known Nash equilibrium refinements, the *perfectness* concept is probably the most studied one. This concept was first introduced by Selten [19] for finite strategic form games. It is based on the idea that a reasonable equilibrium should be stable against slight perturbations in the equilibrium strategies. Hence, the perfect refinement defines stability conditions with respect to slight imperfections of rationality sometimes called "trembling-hand perfection." Selten [19] and Myerson [20] showed that there is at least one perfect equilibrium for any strategic form game. Selten's proof of perfect equilibrium existence is indirect and relies on the existence of Nash equilibrium in every perturbed game. Topolyan [21] used a generalization of Kakutani's fixed point existence theorem to prove the existence of perfect equilibria in finite normal form games and extensive games with perfect recall. Her constructive proof generates a correspondence whose fixed points are precisely the perfect equilibria of a given finite game. For bimatrix games, Borm et al. [22] described a *maximal Selten subset* as a set of interchangeable perfect equilibria. Each maximal Selten subset is a subset of a maximal Nash subset and each extreme point of a maximal Selten subset corresponds to an extreme perfect equilibrium. Laslier and van der Straeten [23] used the concept of "trembling-hand perfection" to analyze an electoral competition problem under imperfect information. Watanabe and Yamato [24] used the same concept to study a choice of auction in seller cheating. Miltersen and Sørensen [25] proposed a computational method to find quasiperfect Nash equilibria for two-player games. While the perfectness verification problem is known to be easy with two players [26], to our knowledge, no results are reported on the perfect refinement of Nash equilibria for polymatrix games.

In this paper, we intend to set an automatic procedure to verify the perfectness of polymatrix games Nash equilibria. Section 2 recalls the definition of a polymatrix game Nash Equilibrium. Section 3 sets a new characterization for polymatrix games perfect equilibria and proposes a linear programming approach to conclude the perfectness of a Nash equilibrium point. Section 4 states a geometric property on the set of perfect equilibria. Section 5 presents computational results obtained over sets of randomly generated polymatrix games with different size and density.

2. Polymatrix Games Nash Equilibria

Let us define $A_{i.} = [A_{i1} \cdots A_{ij} \cdots A_{in}]$ as the payoff matrix of player i against all other players. A partial payoff $a_{ij}(s_i^k, s_j^l)$ is assigned to player i, if player i plays his strategy s_i^k and player j plays his strategy s_j^l. Player i's partial payoff matrix relative to player j's strategic decisions is a $m_i \times m_j$ matrix $A_{ij} = (a_{ij}^{kl})$. The total payoff for player i corresponding to any pure strategic choice $(s_1^k, \ldots, s_n^l)$ of the n players is

$$A_i\left(s_1^k, \ldots, s_n^l\right) = \sum_{j \neq i} a_{ij}\left(s_i^k, s_j^l\right). \tag{1}$$

Each player i selects a probability vector X_i over his set of pure strategies and tries to maximize his own total payoff. The *mixed strategy* vector X_i is such that $X_i = (x_i^1, \ldots, x_i^{m_i})$, where for all $k \in \{1, \ldots, m_i\}$, x_i^k is the relative probability with which player i plays his strategy $s_i^k \in S_i$. Player i's mixed strategies belong to the set:

$$\widetilde{S}_i = \left\{X_i : e_i^T X_i = 1, X_i \geq 0\right\}, \tag{2}$$

where e_i^T is a row vector with all m_i entries equal to 1. At the end of the game, the total payoff of player i can be expressed as follows:

$$\alpha_i(X) = (X_i)^T \sum_{j \neq i} A_{ij} X_j = \sum_{j \neq i} \sum_{k=1}^{m_i} \sum_{l=1}^{m_j} a_{ij}^{kl} x_i^k x_j^l. \tag{3}$$

Like any n-player strategic form game, a polymatrix game has at least one *Nash* equilibrium [1]. We can define a Nash equilibrium to be a n-tuple $\widehat{X} = (\widehat{X}_1, \ldots, \widehat{X}_n)$ of mixed strategies such that for any other n-tuple $X = (\widehat{X}_1, \ldots, \widehat{X}_{i-1}, X_i, \widehat{X}_{i+1}, \ldots, \widehat{X}_n)$ the following inequality is satisfied:

$$\left(\widehat{X}_i\right)^T \sum_{j \neq i} A_{ij} \widehat{X}_j \geq (X_i)^T \sum_{j \neq i} A_{ij} \widehat{X}_j, \quad \text{for } i \in N; \tag{4}$$

that is, player i's payoff relative to all other players is simultaneously maximized.

We denote by NE the set of Nash equilibria. This set is the union of a finite number of polytopes called *maximal Nash subsets* [12]. We define an extreme equilibrium to be any vertex of the maximal Nash subsets. Hence, the set of extreme equilibria is the set of vertices of the maximal Nash subsets. A subset $T \subset \text{NE}$ is called a Nash subset if and only if every pair of elements in T is interchangeable; that is,

$$\begin{gathered} \text{If } \left(\widehat{X}_1, \ldots, \widehat{X}_i, \ldots, \widehat{X}_n\right) \in T, \\ \left(\widehat{Y}_1, \ldots, \widehat{Y}_i, \ldots, \widehat{Y}_n\right) \in T, \\ \text{then, } \left(\widehat{X}_1, \ldots, \widehat{Y}_i, \ldots, \widehat{X}_n\right) \in T, \\ \left(\widehat{Y}_1, \ldots, \widehat{X}_i, \ldots, \widehat{Y}_n\right) \in T, \quad \forall i \in N. \end{gathered} \tag{5}$$

A Nash subset T is called maximal if it is not properly contained in another Nash subset [22]. Enumeration of all maximal Nash subsets can be achieved using an algorithm for the enumeration of all maximal cliques of a graph [26].

3. Polymatrix Games Nash Perfect Equilibria

Let $\widehat{X} = (\widehat{X}_1, \ldots, \widehat{X}_n)$ be a Nash equilibrium of a polymatrix game $G[(A_{ij})_{i \neq j}]$ with n players, and let

$$M_i = M_i\left[A_{i.}, \left(\widehat{X}_1, \ldots, \widehat{X}_{i-1}, \widehat{X}_{i+1}, \ldots, \widehat{X}_n\right)\right] = M_i\left[A_{i.}, \widehat{X}_{-i}\right] \tag{6}$$

be the set of pure best replies of player i against $\widehat{X}_{-i} = (\widehat{X}_1, \ldots, \widehat{X}_{i-1}, \widehat{X}_{i+1}, \ldots, \widehat{X}_n)$:

$$M_i = \left\{ \arg\max_{h \in \{1,\ldots,m_i\}} \left(e_i^h\right)^T \sum_{j \neq i} A_{ij} \widehat{X}_j \right\}, \tag{7}$$

where e_i^h is a column vector with all entries equal to zero, except the hth entry which equals one. Let us also define $CM_i = \text{conv}\,(M_i)$, where conv (M_i) is the convex envelope of M_i.

3.1. Polymatrix Game Perfect Equilibrium Definition. Using Selten's definition of perfect equilibrium for a strategic form game (see [20, Chapter 5]), we define a perfect equilibrium for a polymatrix game as follows.

Definition 1. Let $\widehat{X} = (\widehat{X}_1, \ldots, \widehat{X}_n)$ be a Nash equilibrium of a polymatrix game $G[(A_{ij})_{i \neq j}]$ with n players. The equilibrium $\widehat{X}$ is *perfect* if there exists a sequence $\{X^r\}_{r \in \mathbb{N}} = \{(X_1^r, \ldots, X_n^r)\}_{r \in \mathbb{N}}$ of completely mixed strategies n-tuples converging to $\widehat{X} = (\widehat{X}_1, \ldots, \widehat{X}_n)$, such that, for all $r \in \mathbb{N}$ and $i \in N$,

$$\widehat{X}_i \in CM_i\left[A_{i.}, X_{-i}^r\right]. \tag{8}$$

In other words, a perfect Nash equilibrium $\widehat{X}$ is the limit point of a sequence $\{X^r\}_{r \in \mathbb{N}}$ of completely mixed strategy combinations such that, for every player $i \in N$, $\widehat{X}_i$ is a best response against every X_{-i}^r in every element in this sequence. An equivalent definition which uses ϵ-perfect equilibria can also be stated (see [27, Chapter 2]).

Definition 2. Let $\widehat{X} = (\widehat{X}_1, \ldots, \widehat{X}_n)$ be a Nash equilibrium of a polymatrix game $G[(A_{ij})_{i \neq j}]$ with n players. Given any strictly positive number ϵ_r, with $r \in \mathbb{N}$, the equilibrium $\widehat{X}$ is *perfect* if there exists a sequence of ϵ-perfect equilibria $\{X^{\epsilon_r}\}_{r \in \mathbb{N}} = \{(X_1^{\epsilon_r}, \ldots, X_n^{\epsilon_r})\}_{r \in \mathbb{N}}$ in completely mixed strategies converging to $\widehat{X} = (\widehat{X}_1, \ldots, \widehat{X}_n)$ as ϵ_r goes to zero, such that, for all $r \in \mathbb{N}$ and $i \in N$,

$$\text{if } s_i^k \notin M_i, \text{ then } x_i^{\epsilon_r, k} < \epsilon_r. \tag{9}$$

This second characterization describes a perfect Nash equilibrium $\widehat{X}$ as the limit point of a sequence $\{X^{\epsilon_r}\}_{r \in \mathbb{N}}$ of ϵ-perfect equilibria of the polymatrix game. Every strategy in an ϵ-perfect equilibrium is played with a strictly positive probability. As shown by van Damme in his corollary 2.2.6 in [27], the convergence of the sequences of ϵ-perfect equilibria to the perfect equilibrium $\widehat{X}$ certifies that $\widehat{X}$ is undominated. In other words, in every perfect equilibrium, for any given player i, any strategy $s_i^k \notin M_i$ is assigned a zero probability.

3.2. New Definition for Polymatrix Game Perfect Equilibria. In the following, we reformulate the conditions on polymatrix games perfect equilibria to show that every player's mixed strategic choice is a best response to any combination of the other players pure strategic choices. In other words, we show that every perfect equilibrium of a polymatrix game is undominated and every undominated equilibrium of a polymatrix game is perfect. While this result is known to always be satisfied for bimatrix games, the second part of it is not true in general for games with more than two players. Nevertheless, it appears from the next development that the particular structure of polymatrix games payoffs allows us to extend the perfectness undominance property to polymatrix games. To reach this result, we first show that $\widehat{X}$ is a Nash equilibrium of a polymatrix game if and only if $\widehat{X}_i \in CM_i$.

Proposition 3. *The n-tuple $\widehat{X} = (\widehat{X}_1, \ldots, \widehat{X}_n)$ is a Nash equilibrium of the polymatrix game $G[(A_{ij})_{i \neq j}]$ with n players if and only if $\widehat{X}_i \in CM_i$ for each player $i \in N$.*

Proof. In the first part of the proof, we show that if $\widehat{X} = (\widehat{X}_1, \ldots, \widehat{X}_n)$ is a Nash equilibrium, then $\widehat{X}_i \in CM_i$ for each player $i \in N$. In the second part, we show that if $\widehat{X}_i \in CM_i$ for each player $i \in N$, then $\widehat{X} = (\widehat{X}_1, \ldots, \widehat{X}_n)$ is a Nash equilibrium.

Part I ($\widehat{X} = (\widehat{X}_1, \ldots, \widehat{X}_n)$ is a Nash equilibrium). Since $\widehat{X}$ is a Nash equilibrium, for each player i and for each $X_i \in \widetilde{S}_i$, we have

$$\widehat{X}_i^T \sum_{j \neq i} A_{ij} \widehat{X}_j \geq X_i^T \sum_{j \neq i} A_{ij} \widehat{X}_j. \tag{10}$$

Let $\widehat{X}_i = \sum_{h=1}^{m_i} \alpha_i^h e_i^h$, with $\alpha_i^h \geq 0$ and $\sum_{h=1}^{m_i} \alpha_i^h = 1$. Assume that $\widehat{X}_i \notin CM_i$. Then, there exist at least one $h = k$ ($s_i^k \in S_i$), such that $\alpha_i^k > 0$ and $s_i^k \notin M_i$. Thus, we can write $\widehat{X}_i = \alpha_i^k e_i^k + \sum_{h=1, h \neq k}^{m_i} \alpha_i^h e_i^h$. Moreover, there exists at least one strategy $s_i^l \in S_i$, such that $s_i^l \in M_i$. Since $s_i^k \notin M_i$, we have

$$\left(e_i^l\right)^T \sum_{j \neq i} A_{ij} \widehat{X}_j > \left(e_i^k\right)^T \sum_{j \neq i} A_{ij} \widehat{X}_j. \tag{11}$$

Therefore, $\alpha_i^k (e_i^l)^T \sum_{j \neq i} A_{ij} \widehat{X}_j > \alpha_i^k (e_i^k)^T \sum_{j \neq i} A_{ij} \widehat{X}_j$. Hence,

$$\begin{aligned} &\alpha_i^k \left(e_i^l\right)^T \sum_{j \neq i} A_{ij} \widehat{X}_j + \sum_{h=1, h \neq k}^{m_i} \alpha_i^h \left(e_i^h\right)^T \sum_{j \neq i} A_{ij} \widehat{X}_j \\ &\quad > \alpha_i^k \left(e_i^k\right)^T \sum_{j \neq i} A_{ij} \widehat{X}_j + \sum_{h=1, h \neq k}^{m_i} \alpha_i^h \left(e_i^h\right)^T \sum_{j \neq i} A_{ij} \widehat{X}_j, \end{aligned} \tag{12}$$

which yields

$$\begin{aligned} &\underbrace{\left(\alpha_i^k \left(e_i^l\right)^T + \sum_{h=1, h \neq k}^{m_i} \alpha_i^h \left(e_i^h\right)^T\right)}_{=(X_i)^T} \sum_{j \neq i} A_{ij} \widehat{X}_j \\ &\quad > \underbrace{\left(\alpha_i^k \left(e_i^k\right)^T + \sum_{h=1, h \neq k}^{m_i} \alpha_i^h \left(e_i^h\right)^T\right)}_{=(\widehat{X}_i)^T} \sum_{j \neq i} A_{ij} \widehat{X}_j. \end{aligned} \tag{13}$$

Since $\alpha_i^k + \sum_{h=1,h\neq k}^{m_i} \alpha_i^h = \sum_{h=1}^{m_i} \alpha_i^h = 1$, $X_i \in \widetilde{S}_i$. Thus, the mixed strategy vector $X_i \in \widetilde{S}_i$ is a strictly better response than $\widehat{X}_i$, which contradicts the fact that $\widehat{X}$ is a Nash equilibrium. Therefore, if $\widehat{X} = (\widehat{X}_1, \ldots, \widehat{X}_n)$ is a Nash equilibrium, then $\widehat{X}_i \in CM_i$ for each player $i \in N$.

Part II ($\widehat{X}_i \in CM_i$ for each player $i \in N$). Since $\widehat{X}_i \in CM_i$ for each player $i \in N$, $\widehat{X}_i = \sum_{h=1}^{m_i} \alpha_i^h e_i^h$, with $\alpha_i^h > 0$ only if $s_i^h \in M_i$, and $\sum_{h=1}^{m_i} \alpha_i^h = 1$. We now refer to h by l if $\alpha_i^h > 0$. Then, for each pair (l, k) such that $l \neq k$ ($s_i^k \in S_i$), $s_i^l \in M_i$ and $\alpha_i^l > 0$, we have

$$\left(e_i^l\right)^T \sum_{j\neq i} A_{ij} \widehat{X}_j \geq \left(e_i^k\right)^T \sum_{j\neq i} A_{ij} \widehat{X}_j. \tag{14}$$

Thus,

$$\alpha_i^l \left(e_i^l\right)^T \sum_{j\neq i} A_{ij} \widehat{X}_j \geq \alpha_i^l \left(e_i^k\right)^T \sum_{j\neq i} A_{ij} \widehat{X}_j. \tag{15}$$

If we sum all the $l \in M_i$, we obtain

$$\underbrace{\sum_{h=1,h=l}^{m_i} \alpha_i^l \left(e_i^l\right)^T}_{\left(\widehat{X}_i\right)^T} \sum_{j\neq i} A_{ij} \widehat{X}_j \geq \underbrace{\sum_{h=1,h=l}^{m_i} \alpha_i^l \left(e_i^k\right)^T}_{\left(X_i\right)^T} \sum_{j\neq i} A_{ij} \widehat{X}_j. \tag{16}$$

Since $\sum_{h=1,h=l}^{m_i} \alpha_i^l = 1$, $X_i \in \widetilde{S}_i$. Hence, for each player i, $\widehat{X}_i$ is a better response than any mixed strategy vector $X_i \in \widetilde{S}_i$. We deduce that if $\widehat{X}_i \in CM_i$ for each player $i \in N$, then $\widehat{X}$ is a Nash equilibrium.

We conclude that a n-tuple $\widehat{X} = (\widehat{X}_1, \ldots, \widehat{X}_n)$ is a Nash equilibrium of the polymatrix game $G[(A_{ij})_{i\neq j}]$ with n players if and only if $\widehat{X}_i \in CM_i$, for each player $i \in N$. □

As shown in [4], a strategy s_i^k of a given player i is weakly dominated if, for every pure strategic combination of the other players choices, there exists X_i^{-k}, a convex combination of the pure strategies of player i, such that the total payoff for i, if he plays this weakly dominated strategy, is always less or equal to his payoff if he plays the convex combination of his pure strategies X_i^{-k}. In the following development, we show that in every perfect equilibrium, for any given player i, any weakly dominated strategy s_i^k that provides a total payoff strictly less than the total payoff provided by one of the dominant convex combinations X_i^{-k} of his pure strategies, for some pure strategic combination of the other players choices, should be assigned a zero probability. To do so, let us define $P_i = \{1, \ldots, \prod_{j\neq i} m_j\}$ to be the set of indices of all pure strategy reply combinations by all players $j \neq i$.

Proposition 4. *Let $\widehat{X} = (\widehat{X}_1, \ldots, \widehat{X}_n)$ be a Nash equilibrium of a polymatrix game. For any player i, let $s_i^k \in S_i$ be any weakly dominated pure strategy. Also let X_i^{-k} be a convex combination of the pure strategies of player i that weakly dominates s_i^k. If for some combination $g \in P_i$ the dominant convex combination X_i^{-k} is such that*

$$\left(e_i^k\right)^T \sum_{j\neq i} A_{ij} e_j^g < \left(X_i^{-k}\right)^T \sum_{j\neq i} A_{ij} e_j^g, \tag{17}$$

and if the probability $\widehat{x}_i^k$ assigned by player i to s_i^k is strictly positive, then $\widehat{X}$ is not perfect.

Proof. For any player i, if $s_i^k \in S_i$ is weakly dominated, there exists a convex combination X_i^{-k} of all the other pure strategies of player i, such that $X_i^{-k} = \sum_{h=1,h\neq k}^{m_i} \omega_i^h e_i^h$, $\sum_{h=i,h\neq k}^{m_i} \omega_i^h = 1$, and the following inequality is satisfied:

$$\left(e_i^k\right)^T \sum_{j\neq i} A_{ij} e_j^f \leq \left(X_i^{-k}\right)^T \sum_{j\neq i} A_{ij} e_j^f, \quad \forall f \in P_i. \tag{18}$$

If for some combination $g \in P_i$, we have $(e_i^k)^T \sum_{j\neq i} A_{ij} e_j^g < (X_i^{-k})^T \sum_{j\neq i} A_{ij} e_j^g$, then we can write

$$\left(e_i^k\right)^T \sum_{j\neq i} A_{ij} e_j^f = \left(X_i^{-k}\right)^T \sum_{j\neq i} A_{ij} e_j^f, \quad \forall f \neq g \in P_i. \tag{19}$$

By Definition 1, if $\widehat{X}$ is a perfect equilibrium, then $\widehat{X}_i \in CM_i[A_{i.}, X_{-i}^r]$. Since, for each player $j \neq i$, X_j^r is completely mixed, each pure strategy of j in a combination f or $g \in P_i$ is assigned a strictly positive probability $\omega_j^f > 0$ and $\omega_j^g > 0$, such that $X_j^r = \sum_{f\in P_i, f\neq g} \omega_j^f e_j^f + \sum_{g\in P_i} \omega_j^g e_j^g$.

Thus, we have

$$\omega_j^g \left(e_i^k\right)^T \sum_{j\neq i} A_{ij} e_j^g < \omega_j^g \left(X_i^{-k}\right)^T \sum_{j\neq i} A_{ij} e_j^g, \quad \text{for some } g \in P_i, \tag{20}$$

and $\omega_j^f (e_i^k)^T \sum_{j\neq i} A_{ij} e_j^f = \omega_j^f (X_i^{-k})^T \sum_{j\neq i} A_{ij} e_j^f$, $\forall f \neq g \in P_i$, which is equivalent to

$$\left(e_i^k\right)^T \sum_{j\neq i} A_{ij} \omega_j^g e_j^g < \left(X_i^{-k}\right)^T \sum_{j\neq i} A_{ij} \omega_j^g e_j^g, \quad \text{for some } g \in P_i, \tag{21}$$

and $(e_i^k)^T \sum_{j\neq i} A_{ij} \omega_j^f e_j^f = (X_i^{-k})^T \sum_{j\neq i} A_{ij} \omega_j^f e_j^f$, $\forall f \neq g \in P_i$.

If the weakly dominated strategy s_i^k is assigned a strictly positive probability ω_i^k, then

$$\omega_i^k \left(e_i^k\right)^T \sum_{j\neq i} A_{ij} \left(\omega_j^g e_j^g\right) < \omega_i^k \left(X_i^{-k}\right)^T \sum_{j\neq i} A_{ij} \left(\omega_j^g e_j^g\right), \quad \text{for some } g \in P_i, \tag{22}$$

and $\omega_i^k (e_i^k)^T \sum_{j\neq i} A_{ij} (\omega_j^f e_j^f) = \omega_i^k (X_i^{-k})^T \sum_{j\neq i} A_{ij} (\omega_j^f e_j^f)$, $\forall f \neq g \in P_i$.

Therefore, if we sum, respectively, on all g and $f \in P_i$, we obtain

$$\sum_{g\in P_i} \omega_i^k \left(e_i^k\right)^T \sum_{j\neq i} A_{ij} \left(\omega_j^g e_j^g\right) < \sum_{g\in P_i} \omega_i^k \left(X_i^{-k}\right)^T \sum_{j\neq i} A_{ij} \left(\omega_j^g e_j^g\right), \tag{23}$$

and $\sum_{f\in P_i, f\neq g} \omega_i^k (e_i^k)^T \sum_{j\neq i} A_{ij}(\omega_j^f e_j^f) = \sum_{f\in P_i, f\neq g} \omega_i^k (X_i^{-k})^T \sum_{j\neq i} A_{ij}(\omega_j^f e_j^f)$, which is equivalent to

$$\begin{aligned}\omega_i^k\left(e_i^k\right)^T\sum_{j\neq i}A_{ij}\sum_{g\in P_i}\left(\omega_j^g e_j^g\right) &< \omega_i^k\left(X_i^{-k}\right)^T\sum_{j\neq i}A_{ij}\sum_{g\in P_i}\left(\omega_j^g e_j^g\right),\\ \omega_i^k\left(e_i^k\right)^T\sum_{j\neq i}A_{ij}\sum_{f\in P_i, f\neq g}\left(\omega_j^f e_j^f\right)&\\ = \omega_i^k\left(X_i^{-k}\right)^T\sum_{j\neq i}A_{ij}\sum_{f\in P_i, f\neq g}\left(\omega_j^f e_j^f\right).&\end{aligned} \tag{24}$$

Since $X_j^r = (\sum_{f\in P_i, f\neq g}(\omega_j^f e_j^f) + \sum_{g\in P_i}(\omega_j^g e_j^g))$, adding side by side inequality (24) yields

$$\omega_i^k\left(e_i^k\right)^T\sum_{j\neq i}A_{ij}X_j^r < \omega_i^k\left(X_i^{-k}\right)^T\sum_{j\neq i}A_{ij}X_j^r. \tag{25}$$

Also, we know that the mixed strategy vector $\widehat{X}_i$ can be expressed using the weakly dominated strategy s_i^k and all other pure strategies. Hence, we can write

$$\widehat{X}_i = \omega_i^k e_i^k + \sum_{h=1, h\neq k}^{m_i} \omega_i^h e_i^h, \tag{26}$$

such that $\omega_i^k + \sum_{h=1,h\neq k}^{m_i} \omega_i^h = 1$. Thus, if we add the term

$$\sum_{h=1,h\neq k}^{m_i} \omega_i^h\left(e_i^h\right)^T\sum_{j\neq i}A_{ij}\left(\sum_{f\in P_i, f\neq g}\left(\omega_j^f e_j^f\right) + \sum_{g\in P_i}\left(\omega_j^g e_j^g\right)\right), \tag{27}$$

to both sides of inequality (25), we obtain

$$\begin{aligned}&\underbrace{\left(\omega_i^k\left(e_i^k\right)^T + \sum_{h=1,h\neq k}^{m_i}\omega_i^h\left(e_i^h\right)^T\right)}_{=\widehat{X}_i}\sum_{j\neq i}A_{ij}X_j^r\\ &\quad < \underbrace{\left(\omega_i^k\left(X_i^{-k}\right)^T + \sum_{h=1,h\neq k}^{m_i}\omega_i^h\left(e_i^h\right)^T\right)}_{=X_i}\sum_{j\neq i}A_{ij}X_j^r.\end{aligned} \tag{28}$$

Thus, $\widehat{X}_i \notin CM_i[A_{i.}, X_{-i}^r]$, which contradicts the fact that $\widehat{X}$ is perfect. Therefore, if $\widehat{X}$ is a perfect Nash equilibrium, then for any given player i, any weakly dominated strategy s_i^k that provides a total payoff strictly less than the total payoff provided by a dominant convex combination X_i^{-k}, for some pure strategic combination of the other players choices, should be assigned a zero probability. □

We now show that every perfect equilibrium of a polymatrix game is undominated and every undominated equilibrium of a polymatrix game is perfect. Theorem 5 sets an alternate definition of perfect equilibrium for polymatrix games.

Theorem 5. *Let $\widehat{X} = (\widehat{X}_1, \ldots, \widehat{X}_n)$ be a Nash equilibrium of a polymatrix game, and let e_j^h be any pure strategy reply vector by any player $j \neq i$. The Nash equilibrium $\widehat{X}$ is perfect if and only if for each player i and any vector $X_i \in \widetilde{S}_i$, the vector $\widehat{X}_i \in \widetilde{S}_i$ satisfies*

$$\left(\widehat{X}_i\right)^T\sum_{j\neq i}A_{ij}e_j^h \geq \left(X_i\right)^T\sum_{j\neq i}A_{ij}e_j^h. \tag{29}$$

Proof. In the first part of the proof, we show that if $\widehat{X} = (\widehat{X}_1, \ldots, \widehat{X}_n)$ is a perfect Nash equilibrium, then $(\widehat{X}_i)^T \sum_{j\neq i} A_{ij}e_j^h \geq (X_i)^T \sum_{j\neq i} A_{ij}e_j^h$ for each player $i \in N$. In the second part, we show that if $(\widehat{X}_i)^T \sum_{j\neq i} A_{ij}e_j^h \geq (X_i)^T \sum_{j\neq i} A_{ij}e_j^h$ for each player $i \in N$, then $\widehat{X} = (\widehat{X}_1, \ldots, \widehat{X}_n)$ is a perfect Nash equilibrium.

Part I (the Nash equilibrium $\widehat{X}$ is perfect). Firstly, we write $\widehat{X}_i = \sum_{k=1}^{m_i} \omega_i^k e_i^k$, with $\sum_{k=1}^{m_i} \omega_i^k = 1$ and $\omega_i^k \geq 0$. Since $\widehat{X} = (\widehat{X}_1, \ldots, \widehat{X}_n)$ is a perfect Nash equilibrium of a polymatrix game, Proposition 4 implies that, for each player $i \in N$, $\widehat{X}_i$ is such that any pure strategy s_i^k is assigned a nonzero probability $\omega_i^k > 0$ only if for any pure strategy reply vector e_j^h, by any player $j \neq i$, we have

$$\left(e_i^k\right)^T\sum_{j\neq i}A_{ij}e_j^h \geq \left(e_i^l\right)^T\sum_{j\neq i}A_{ij}e_j^h, \quad \forall s_i^l \neq s_i^k \in S_i,\ \forall i \in N. \tag{30}$$

Thus, we can write

$$\omega_i^k\left(e_i^k\right)^T\sum_{j\neq i}A_{ij}e_j^h \geq \omega_i^k\left(e_i^l\right)^T\sum_{j\neq i}A_{ij}e_j^h, \quad \forall s_i^l \neq s_i^k \in S_i,\ \forall i \in N. \tag{31}$$

Therefore, we obtain

$$\begin{aligned}\underbrace{\sum_{k=1}^{m_i}\omega_i^k\left(e_i^k\right)^T}_{=\widehat{X}_i^T}\sum_{j\neq i}A_{ij}e_j^h &\geq \underbrace{\sum_{k=1}^{m_i}\omega_i^k\left(e_i^l\right)^T}_{=X_i^T}\sum_{j\neq i}A_{ij}e_j^h,\\ &\forall s_i^l \neq s_i^k \in S_i, \quad \forall i \in N.\end{aligned} \tag{32}$$

Since $\sum_{k=1}^{m_i} \omega_i^k = 1$, $\sum_{k=1}^{m_i} \omega_i^k (e_i^l)^T = X_i^T \in \widetilde{S}_i$. Hence

$$\left(\widehat{X}_i\right)^T\sum_{j\neq i}A_{ij}e_j^h \geq \left(X_i\right)^T\sum_{j\neq i}A_{ij}e_j^h, \quad i \in N. \tag{33}$$

We deduce that if $\widehat{X}$ is a perfect Nash equilibrium, then $\widehat{X}_i$ is a best response to any combination of the other players pure strategic choices.

Part II ($(\widehat{X}_i)^T \sum_{j\neq i} A_{ij}e_j^h \geq (X_i)^T \sum_{j\neq i} A_{ij}e_j^h$ for each player $i \in N$). Many authors show how to construct a sequence of completely mixed strategies converging to a given Nash equilibrium under some refinement conditions [20, 26]. In the absence of any particular refinement condition, we can

assume that it is easy to construct a sequence $\{X^r\}_{r\in\mathbb{N}} = \{(X_1^r,\ldots,X_n^r)\}_{r\in\mathbb{N}}$ of completely mixed strategies n-tuples converging to $\widehat{X} = (\widehat{X}_1,\ldots,\widehat{X}_n)$.

Let $X_j^r = \sum_{h=1}^{m_j}\omega_j^{rh}e_j^h$. Then, each real parameter ω_j^{rh} is strictly positive ($\omega_j^{rh} > 0$) and $\sum_{h=1}^{m_j}\omega_j^h = 1$. Since $(\widehat{X}_i)^T\sum_{j\neq i}A_{ij}e_j^h \geq (X_i)^T\sum_{j\neq i}A_{ij}e_j^h$ for all $i\in N$, for each positive real parameter ω_j^{rh}, we can write

$$\omega_j^{rh}\left(\widehat{X}_i\right)^T\sum_{j\neq i}A_{ij}e_j^h \geq \omega_j^{rh}(X_i)^T\sum_{j\neq i}A_{ij}e_j^h, \quad i\in N. \tag{34}$$

Thus, if we sum all the $h\in m_j$, we obtain

$$\sum_{h=1}^{m_j}\omega_j^{rh}\left(\widehat{X}_i\right)^T\sum_{j\neq i}A_{ij}e_j^h \geq \sum_{h=1}^{m_j}\omega_j^{rh}(X_i)^T\sum_{j\neq i}A_{ij}e_j^h, \quad i\in N. \tag{35}$$

Hence,

$$\left(\widehat{X}_i\right)^T\sum_{j\neq i}\sum_{h=1}^{m_j}\omega_j^{rh}A_{ij}e_j^h \geq (X_i)^T\sum_{j\neq i}\sum_{h=1}^{m_j}\omega_j^{rh}A_{ij}e_j^h, \quad i\in N. \tag{36}$$

Therefore,

$$\left(\widehat{X}_i\right)^T\sum_{j\neq i}A_{ij}\underbrace{\sum_{h=1}^{m_j}\omega_j^{rh}e_j^h}_{=X_j^r} \geq (X_i)^T\sum_{j\neq i}A_{ij}\underbrace{\sum_{h=1}^{m_j}\omega_j^{rh}e_j^h}_{=X_j^r}, \quad i\in N. \tag{37}$$

Since $\sum_{h=1}^{m_j}\omega_j^h = 1$, we obtain

$$\left(\widehat{X}_i\right)^T\sum_{j\neq i}A_{ij}X_j^r \geq (X_i)^T\sum_{j\neq i}A_{ij}X_j^r, \quad i\in N, \tag{38}$$

which shows that $\widehat{X}_i$ is a best response to every X_j^r in the sequence

$$\widehat{X}_i \in CM_i\left[A_{i\cdot}, X_{-i}^r\right]. \tag{39}$$

Hence, $\widehat{X}$ satisfies the conditions of Definition 1; that is, $\widehat{X}$ is a perfect Nash equilibrium.

We finally conclude that the Nash equilibrium $\widehat{X}$ is perfect if and only if for any pure strategy reply vector e_j^h by any player $j\neq i$, for each player i and any vector $X_i\in\widetilde{S}_i$, the vector $\widehat{X}_i\in\widetilde{S}_i$ satisfies

$$\left(\widehat{X}_i\right)^T\sum_{j\neq i}A_{ij}e_j^h \geq (X_i)^T\sum_{j\neq i}A_{ij}e_j^h. \tag{40}$$

This shows that $\widehat{X}$ is a perfect Nash equilibrium if and only if it is a best response to any combination of the other players pure strategic choices. □

While this perfectness undominance property is generally not right for n-player normal form games, Theorem 5 showed how the additive structure of polymatrix games payoffs allows this property to be extended to this particular class of n-player games. Hence, if there exists a vector of mixed strategies X such that

$$\begin{aligned}(X_i)^T\sum_{j\neq i}A_{ij}e_j^h &\geq \left(\widehat{X}_i\right)^T\sum_{j\neq i}A_{ij}e_j^h,\\ (X_i)^T\sum_{j\neq i}A_{ij}e_j^h &\neq \left(\widehat{X}_i\right)^T\sum_{j\neq i}A_{ij}e_j^h,\end{aligned} \tag{41}$$

then the equilibrium $\widehat{X} = (\widehat{X}_1,\ldots,\widehat{X}_n)$ is not perfect. An immediate corollary can be stated.

Corollary 6. *Let $\widehat{X} = (\widehat{X}_1,\ldots,\widehat{X}_n)$ be a Nash equilibrium of a polymatrix game. For any player i, if there is a vector $X_i\in\widetilde{S}_i$ such that*

$$\begin{aligned}(X_i)^T\sum_{j\neq i}A_{ij}e_j^h &\geq \left(\widehat{X}_i\right)^T\sum_{j\neq i}A_{ij}e_j^h, \quad \forall h\in P_i,\\ (X_i)^T\sum_{j\neq i}A_{ij}e_j^g &\neq \left(\widehat{X}_i\right)^T\sum_{j\neq i}A_{ij}e_j^g, \quad \text{for some } g\in P_i,\end{aligned} \tag{42}$$

then $\widehat{X}$ is not perfect.

This characterization of equilibrium strategies can be used to verify if a Nash equilibrium $\widehat{X} = (\widehat{X}_1,\ldots,\widehat{X}_n)$ is perfect or not.

Proposition 7. *The equilibrium $\widehat{X} = (\widehat{X}_1,\ldots,\widehat{X}_n)$ is perfect if and only if all optimal objective functions values of the following linear programs are equal to zero, for all $i\in N$:*

$$\begin{aligned}\underset{(X_i,\epsilon_i)\in\mathbb{R}^{m_i}\times\mathbb{R}^{|P_i|}}{\text{maximize}} \quad & \sum_{h\in P_i}\epsilon_i^h\\ \text{subject to} \quad & e_{m_i}^tX_i = 1,\\ & (X_i)^T\sum_{j\neq i}A_{ij}e_j^h\\ & \geq \left(\widehat{X}_i\right)^T\sum_{j\neq i}A_{ij}e_j^h + \epsilon_i^h,\\ & \forall h\in P_i, \quad X_i,\epsilon_i\geq 0,\end{aligned} \tag{43}$$

where e_{m_i} is a column vector with all entries equal to one.

Proof. Let (X_i^*,ϵ_i^*) be the optimal solution for a linear program (43), for some $i\in N$. If the optimal objective function value is strictly positive, then at least one of the ϵ_i^h variables is strictly positive.

In other words, there is at least one $\epsilon_i^h > 0$, with $h\in P_i$, such that

$$(X_i)^T\sum_{j\neq i}A_{ij}e_j^h \geq \left(\widehat{X}_i\right)^T\sum_{j\neq i}A_{ij}e_j^h + \epsilon_i^h. \tag{44}$$

Therefore, we have $(X_i)^T\sum_{j\neq i}A_{ij}e_j^h > (\widehat{X}_i)^T\sum_{j\neq i}A_{ij}e_j^h$, which means that

$$(X_i)^T\sum_{j\neq i}A_{ij}e_j^h \neq \left(\widehat{X}_i\right)^T\sum_{j\neq i}A_{ij}e_j^h, \tag{45}$$

while $(X_i)^T \sum_{j\neq i} A_{ij}e_j^h \geq (\widehat{X}_i)^T \sum_{j\neq i} A_{ij}e_j^h + \epsilon_i^h$ is satisfied. Hence, the equilibrium $\widehat{X} = (\widehat{X}_1, \ldots, \widehat{X}_n)$ is not perfect.

If all the optimal objective functions are equal to zero, for all $i \in N$, then all the entries of the ϵ_i^* vectors are equal to zero. The ϵ_i^* vectors correspond to the maximum slack vectors between $(X_i)^T \sum_{j\neq i} A_{ij}e_j^h$ and $(\widehat{X}_i)^T \sum_{j\neq i} A_{ij}e_j^h$. Therefore,

$$(X_i)^T \sum_{j\neq i} A_{ij}e_j^h = \left(\widehat{X}_i\right)^T \sum_{j\neq i} A_{ij}e_j^h. \tag{46}$$

Hence, if all the ϵ_i^* vectors are equal to zero, the equilibrium $(\widehat{X}_1, \ldots, \widehat{X}_n)$ is perfect. □

We note that the linear programs (43) are always feasible for $X_i = \widehat{X}_i$ and $\epsilon_i = 0$.

Example 8. Consider a three-player polymatrix game ($3\times3\times3$) taken from Audet et al. [4], where $A_{1.}$, $A_{2.}$, and $A_{3.}$ are the payoff matrices of players I, II, and III, respectively. As presented in Table 1, the $E\chi$MIP algorithm enumerated seven extreme Nash equilibria for this game using exact arithmetics:

$$A_{1.} = \left(\begin{array}{ccc|ccc} 10 & 10 & -10 & 20 & 30 & 25 \\ 20 & -10 & -10 & -10 & 0 & 20 \\ 30 & -15 & -10 & -10 & 20 & 10 \end{array}\right),$$
$$A_{2.} = \left(\begin{array}{ccc|ccc} -10 & 20 & 10 & -20 & 30 & 10 \\ 30 & 0 & 35 & 10 & -10 & -10 \\ 30 & 35 & 30 & 20 & 10 & -20 \end{array}\right), \tag{47}$$
$$A_{3.} = \left(\begin{array}{ccc|ccc} -30 & -10 & 10 & 10 & 20 & -30 \\ 40 & 10 & 40 & 20 & 10 & 20 \\ 10 & 20 & 22 & 30 & 20 & 40 \end{array}\right).$$

This game has five maximal Nash subsets $T_1 = \{1, 7\}$, $T_2 = \{2, 3\}$, $T_3 = \{4\}$, $T_4 = \{5\}$, and $T_5 = \{6\}$. For the second extreme Nash equilibrium, the linear program (43), for player III, is expressed as follows:

$$\begin{aligned}
\underset{X_3,\epsilon_3}{\text{maximize}} \quad & \epsilon_3^1 + \epsilon_3^2 + \epsilon_3^3 + \epsilon_3^4 + \epsilon_3^5 + \epsilon_3^6 + \epsilon_3^7 + \epsilon_3^8 + \epsilon_3^9 \\
\text{subject to} \quad & x_{31} + x_{32} + x_{33} = 1, \\
& 20x_{31} + 60x_{32} + 40x_{33} \geq 40 + \epsilon_3^1, \\
& 10x_{31} + 50x_{32} + 30x_{33} \geq 30 + \epsilon_3^2, \\
& -60x_{31} + 60x_{32} + 50x_{33} \geq 50 + \epsilon_3^3, \\
& 30x_{32} + 50x_{33} \geq 50 + \epsilon_3^4, \\
& 10x_{31} + 20x_{32} + 40x_{33} \geq 40 + \epsilon_3^5, \\
& -40x_{31} + 30x_{32} + 60x_{33} \geq 60 + \epsilon_3^6, \\
& 20x_{31} + 60x_{32} + 52x_{33} \geq 52 + \epsilon_3^7, \\
& 30x_{31} + 50x_{32} + 42x_{33} \geq 42 + \epsilon_3^8, \\
& -20x_{31} + 60x_{32} + 62x_{33} \geq 62 + \epsilon_3^9, \\
& X_3, \epsilon_3 \geq 0.
\end{aligned} \tag{48}$$

As in Audet et al. [28], we have used exact arithmetics to obtain exact solutions for these linear programs. For this polymatrix game, all of the seven extreme Nash equilibria enumerated are found to be perfect.

4. Geometry of The Set of Perfect Equilibria

The preceding game example suggests that the enumeration of the extreme Nash equilibria of a polymatrix game leads to a description of the set of Nash perfect equilibria. However, to the best of our knowledge, there are no published results on the geometric properties of the set of Nash perfect equilibria for polymatrix games. By Proposition 9, we show that the set of Nash equilibria of a polymatrix game is a finite union of convex polytopes.

Proposition 9. *Let $G[(A_{ij})_{i\neq j}]_n$ be a polymatrix game with n players. Any perfect Nash equilibrium $\widehat{X} = (\widehat{X}_1, \ldots, \widehat{X}_n)$ is a convex combination of extreme perfect Nash equilibria.*

Proof. Given that $\widehat{X} = (\widehat{X}_1, \ldots, \widehat{X}_n)$ is a Nash equilibrium, then $\widehat{X}$ can be expressed as a convex combination of a number of extreme Nash equilibria belonging to the same Nash maximal subset T.

Let $X^s = (X_1, X_2, \ldots, X_{i-1}, Y_i^s, X_{i+1}, \ldots, X_n)$ be any extreme Nash equilibrium representing any extreme point of the Nash maximal subset T.

Then, we can write $\widehat{X} = \sum_{s=1}^{e_T} \omega_s X^s$, where e_T is the number of extreme Nash equilibria in T, $\omega_s \geq 0$, and $\sum_{s=1}^{e_T} \omega_s = 1$. Therefore, $\widehat{X}_i = \sum_{s=1}^{e_T} \omega_s Y_i^s$.

Given that $\widehat{X}$ is a perfect equilibrium, then for any vector $X_i \in \widetilde{S}_i$, the vector $\widehat{X}_i \in \widetilde{S}_i$ is such that

$$\left(\widehat{X}_i\right)^T \sum_{j\neq i} A_{ij}e_j^h \geq (X_i)^T \sum_{j\neq i} A_{ij}e_j^h, \tag{49}$$

where $e_j^h \in P_i$ is a vector of pure strategy reply by any player $j \neq i$.

Thus, for any vector $X_i \in \widetilde{S}_i$, we have

$$\sum_{s=1}^{e_T} \omega_s (Y_i^s)^T \sum_{j\neq i} A_{ij}e_j^h \geq (X_i)^T \sum_{j\neq i} A_{ij}e_j^h. \tag{50}$$

Now let us suppose that $\widehat{X}$ can be expressed as a combination of extreme perfect and extreme nonperfect Nash equilibria of the Nash maximal subset T. In particular, let $X^q = (X_1, X_2, \ldots, X_{i-1}, Y_i^q, X_{i+1}, \ldots, X_n)$ be an extreme nonperfect Nash equilibrium of T. Also, let $X^p = (X_1, X_2, \ldots, X_{i-1}, Y_i^p, X_{i+1}, \ldots, X_n)$ be an extreme perfect Nash equilibrium of T. Then, we can write

$$\widehat{X} = \sum_p \omega_p X^p + \sum_q \omega_q X^q, \tag{51}$$

with at least one $\omega_p > 0$ and at least one $\omega_q > 0$.

Thus, for every $k \neq i$, $\widehat{X}_k = \sum_p \omega_p X_k^p + \sum_q \omega_q X_k^q$. Since all extreme Nash equilibria of T are interchangeable and have in

Table 1: Extreme Nash equilibria for Example 8.

Eq.	α_1	α_2	α_3	X_1	X_2	X_3
1	50	40	60	$(0,0,1)$	$(1,0,0)$	$(0,1,0)$
2	40	30	50	$(0,1,0)$	$(1,0,0)$	$(0,0,1)$
3	40	160/7	360/7	$(0,2/7,5/7)$	$(1,0,0)$	$(0,0,1)$
4	30	818/55	2592/55	$(309/550,118/275,1/110)$	$(8/11,0,3/11)$	$(0,1/11,10/11)$
5	25	12	49	$(3/5,2/5,0)$	$(1/2,0,1/2)$	$(0,0,1)$
6	20	40	60	$(1,0,0)$	$(0,0,1)$	$(0,1,0)$
7	30	40	60	$(0,0,1)$	$(1/2,0,1/2)$	$(0,1,0)$

common X_k for every $k \neq i$, we can write $\widehat{X}_k = \sum_p \omega_p X_k + \sum_q \omega_q X_k$. Hence, $\widehat{X}_k = X_k$, for every $k \neq i$. Therefore,

$$\left(\widehat{X}_k\right)^T \sum_{j\neq k} A_{kj} e_j^h = \left(X_k\right)^T \sum_{j\neq k} A_{kj} e_j^h, \quad \forall k \neq i. \tag{52}$$

On one hand, condition (52) is satisfied for X^q except for Y_i^q $(k = i)$, since X^q is not perfect. Therefore, there exists a vector $X_i^q \in \widetilde{S}_i$ such that

$$\left(Y_i^q\right)^T \sum_{j\neq i} A_{ij} e_j^h < \left(X_i^q\right)^T \sum_{j\neq i} A_{ij} e_j^h. \tag{53}$$

Hence, with $\omega_q > 0$ we have

$$\omega_q \left(Y_i^q\right)^T \sum_{j\neq i} A_{ij} e_j^h < \omega_q \left(X_i^q\right)^T \sum_{j\neq i} A_{ij} e_j^h. \tag{54}$$

On the other hand, since X^p is perfect, condition (52) is satisfied for X^p including Y_i^p $(k = i)$. Then, for any vector $X_i^p \in \widetilde{S}_i$, we have

$$\left(Y_i^p\right)^T \sum_{j\neq i} A_{ij} e_j^h \geq \left(X_i^p\right)^T \sum_{j\neq i} A_{ij} e_j^h. \tag{55}$$

Therefore, with $\omega_p > 0$ we have

$$\omega_p \left(Y_i^p\right)^T \sum_{j\neq i} A_{ij} e_j^h \geq \omega_p \left(X_i^p\right)^T \sum_{j\neq i} A_{ij} e_j^h. \tag{56}$$

Inequalities (54) and (56) imply

$$\begin{aligned} &\left(\sum_q \omega_q \left(Y_i^q\right)^T + \sum_p \omega_p \left(Y_i^p\right)^T\right) \sum_{j\neq i} A_{ij} e_j^h \\ &\quad < \left(\sum_q \omega_q \left(X_i^q\right)^T + \sum_p \omega_p \left(Y_i^p\right)^T\right) \sum_{j\neq i} A_{ij} e_j^h. \end{aligned} \tag{57}$$

Since $\widehat{X}_i = \sum_{s=1}^{e_T} \omega_s Y_i^s = \sum_q \omega_q Y_i^q + \sum_p \omega_p Y_i^p$, we have

$$\begin{aligned} &\sum_{s=1}^{e_T} \omega_s \left(Y_i^s\right)^T \sum_{j\neq i} A_{ij} e_j^h \\ &\quad < \left(\sum_q \omega_q \left(X_i^q\right)^T + \sum_p \omega_p \left(Y_i^p\right)^T\right) \sum_{j\neq i} A_{ij} e_j^h. \end{aligned} \tag{58}$$

It is now made clear that Condition (58) contradicts Condition (50). Therefore, if X^q is a nonperfect extreme Nash equilibrium, then $\omega_q = 0$. Hence, any perfect Nash equilibrium $\widehat{X} = (\widehat{X}_1, \ldots, \widehat{X}_n)$ is a convex combination of extreme perfect Nash equilibria. □

A set of perfect Nash equilibria belonging to the same Nash subset is called a *Selten* subset. If a Selten subset is not properly contained in another Selten subset, then it is called a *maximal* Selten subset.

Corollary 10. *Any maximal Selten subset is a convex polytope.*

Proof. Following Proposition 9, any perfect equilibrium is a convex combination of a number of extreme Nash equilibria belonging to the same maximal Nash subset. Therefore, any maximal Selten subset is a convex polytope. □

Example 11. Given the Nash maximal subsets identified for Example 8, the maximal Selten subsets of this game are $S_1 = \{1,7\}$, $S_2 = \{2,3\}$, $S_3 = \{4\}$, $S_4 = \{5\}$, and $S_5 = \{6\}$.

Quintas [12] showed that the set of Nash equilibrium points in a polymatrix game is a finite union of convex polytopes. These convex polytopes are possibly disjoint as in Example 8. Following Proposition 9 and Corollary 10, we state that the set of perfect Nash equilibrium points of a polymatrix game is a finite union of convex polytopes, possibly disjoint.

Theorem 12. *The set of perfect Nash equilibrium points of a polymatrix game is a finite union of convex polytopes, possibly disjoint.*

Proof. Any maximal Selten subset is a convex polytope contained in a maximal Nash subset. Therefore, the set of perfect Nash equilibrium points of a polymatrix game is a finite union of convex polytopes. The maximal Selten subsets are possibly disjoint as in Example 8. □

5. Applications

Many applications can be found to illustrate how polymatrix games can be used. In the following, we illustrate our results

on a three-player chain store competition game and a three-player inspection management game inspired from Fandel and Trockel [29].

Application 1. Figure 1 illustrates an extensive competition game with imperfect information involving three chain stores. Each of the chain stores 1, 2, and 3 has to decide either to enter the market zones of both of its opponents or not. Hence, each chain store randomizes on two pure strategic decisions "In" and "out." Each chain store gets a partial payoff depending on its decision and the opponents' decisions. For example, if chain store 1 decides to get "In" while chain stores 2 and 3 decide to stay out, chain store 1 gets 4 + 5 as a total payoff and chain stores 2 and 3 get, respectively, 4 + 3 and 3+2, respectively. This game can be reduced to a three-person polymatrix game with the following payoff matrices:

$$A_{1.} = \left(\begin{array}{cc|cc} 1 & 4 & 2 & 5 \\ 0 & 2 & 3 & 3 \end{array}\right),$$
$$A_{2.} = \left(\begin{array}{cc|cc} -1 & 2 & 3 & 4 \\ 4 & 1 & -1 & 3 \end{array}\right), \tag{59}$$
$$A_{3.} = \left(\begin{array}{cc|cc} -1 & -2 & 5 & 4 \\ 3 & 1 & 1 & 2 \end{array}\right).$$

Using exact arithmetics, the $E\chi$MIP algorithm enumerated three extreme Nash equilibria for this game, as presented in Table 2. This game has three completely disjoint maximal Nash subsets $T_1 = \{1\}$, $T_2 = \{2\}$, and $T_3 = \{3\}$. The extreme Nash equilibria 1 and 3 are not perfect. In fact, for both of these extreme equilibria, $X_1 = (1, 0)$ dominates $\widehat{X}_1 = (0, 1)$ and $\widehat{X}_1 = (5/6, 1/6)$, respectively. The second strategy of player 1 is weakly dominated by his first strategy. Therefore, any Nash equilibrium which assigns to this strategy a strictly positive probability cannot be perfect. The extreme Nash equilibrium 2 is perfect and defines by itself the unique maximal Selten subset of this game. This equilibrium is also the unique subgame perfect Nash equilibrium of the original extensive game with imperfect information.

Application 2. A polymatrix management inspection game involves three players; the manager (M), the controller (C), and the company's management (U). The manager has to randomize between two pure strategies: m, to plan methodically, or nm, not to plan methodically. The controller controls the manager's work and has to randomize between two pure strategies: h, to compile a precise report on the manager's activity, or nh, not to compile a precise report on the manager's activity. The company's management inspects the controller's report and has to randomize between two pure strategies: a, to perform an intensive inspection of the controller's report, or na, not to perform an intensive inspection of the controller's report.

If the manager (M) plans methodically, he is rewarded by the company's board with a bonus compensation B_D^a or B_D^{na} depending on the company's board inspection. Otherwise, a penalty S_D^a or S_D^{na} is subtracted from his salary. If the controller (C) compiles a precise report he is rewarded by the company's board with a bonus amount B_C^a or B_C^{na} depending

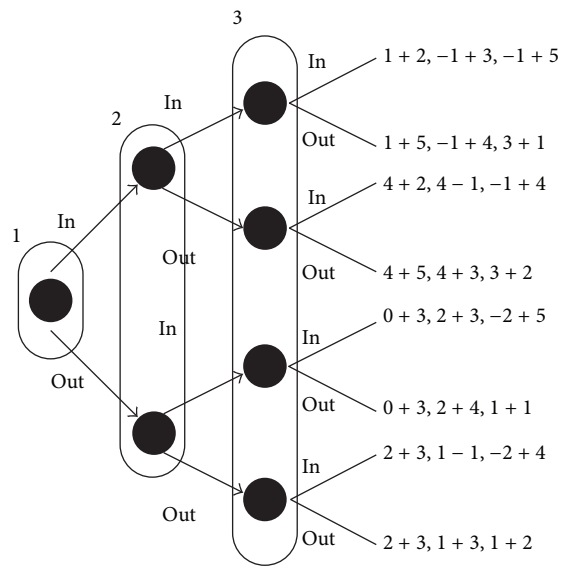

Figure 1: Chain store competition game.

Table 2: Extreme Nash equilibria for Application 1.

Eq.	α_1	α_2	α_3	X_1	X_2	X_3	T	Perfect
1	3	5	3	$(0, 1)$	$(1, 0)$	$(1, 0)$	1	No
2	9	7	5	$(1, 0)$	$(0, 1)$	$(0, 1)$	2	Yes
3	3	5/2	23/6	$(5/6, 1/6)$	$(1, 0)$	$(1, 0)$	3	No

on the company's board inspection. Otherwise, a penalty S_C^a or S_C^{na} is subtracted from his remuneration. The manager not planning methodically has a leisure gain payoff L. The cost of a precise report to the controller is K_C^m if the manager plans methodically. Otherwise the cost of the report is K_C^{nm}. The cost of an intensive inspection to the company's board is K_U^h if the controller compiles a precise report. Otherwise the cost is K_U^{nh}. If the manager plans methodically the company's board (U) earns a profit Π. Otherwise a loss Δ is registered. The payoff matrices can be expressed as follows:

$$A_D = \left(\begin{array}{cc|cc} 0 & 0 & B_D^a & B_D^{na} \\ L & L & -S_D^a & -S_D^{na} \end{array}\right)$$
$$A_C = \left(\begin{array}{cc|cc} -K_C^m & -K_C^{nm} & B_C^a & B_C^{na} \\ 0 & 0 & -S_C^a & -S_C^{na} \end{array}\right)$$
$$A_U = \left(\begin{array}{cc|cc} \Pi - B_D^a & -\Delta + S_D^a & -K_U^h - B_C^a & -K_U^{nh} + S_C^a \\ \Pi - B_D^{na} & -\Delta + S_D^{na} & -B_C^{na} & S_C^{na} \end{array}\right). \tag{60}$$

The current values of the game parameters are displayed in Table 3.

This game has three extreme Nash equilibria and two maximal Nash subsets $T_1 = \{1, 2\}$ and $T_2 = \{2, 3\}$. As presented in Table 4, the extreme Nash equilibria 2 and 3 are not perfect. In fact, for both of these extreme equilibria, $X_1 = (0, 1)$ dominates $\widehat{X}_1 = (1/2, 1/2)$. For the manager ($D$), the weakly dominated strategy m cannot be assigned

Table 3: Three-player management inspection game parameters.

(D)	(C)	(U)
$L = 440$	$K_C^m = 400, K_C^{nm} = 600$	$K_U^h = 100, K_U^{nh} = 200$
$B_D^a = 40$	$B_C^a = 300$	$\Pi = 1000$
$B_D^{na} = 10$	$B_C^{na} = 100$	$\Delta = 500$
$S_D^a = 400$	$S_C^a = 200$	
$S_D^{na} = 100$	$S_C^{na} = 100$	

Table 4: Extreme Nash equilibria for Application 1.

Eq.	α_1	α_2	α_3	X_1	X_2	X_3	T	Perfect
1	40	−200	−100	$(0, 1)$	$(0, 1)$	$(1, 0)$	1	Yes
2	40	−200	430	$(1/2, 1/2)$	$(0, 1)$	$(1, 0)$	1, 2	No
3	40	−200	360	$(1/2, 1/2)$	$(7/40, 33/40)$	$(1, 0)$	2	No

Table 5: Computational results on randomly generated polymatrix games.

Size	$d = 0.125$			$d = 0.25$			$d = 0.5$			$d = 0.75$			$d = 1.0$		
	ne	np	%	ne	np	%	ne	np	%	ne	np	%	ne	np	%
$2 \times 2 \times 2$	53	32	60	29	22	76	15	13	87	16	16	100	10	10	100
$3 \times 3 \times 3$	110	66	60	76	20	26	29	23	79	20	19	95	16	15	94
$4 \times 4 \times 4$	157	48	31	75	38	51	39	37	95	32	27	84	39	30	77

a nonzero probability strategy. The extreme Nash equilibrium 1 is perfect and defines by itself the unique maximal Selten subset of this game.

6. Computational Results

Our computational experiments on randomly generated polymatrix games with different size and density are presented in Table 5. Using C++ implementations of the $E\chi$MIP algorithm, these experimental results were obtained under Windows XP on workstations with 3.3 GHz Intel Core i5 vPro processors and 3.2 GB RAM. The optimization of the linear programs defined by Proposition 7 is performed using an exact arithmetics implementation of the Simplex algorithm [30].

The column (Size) indicates the number of strategies of each player before elimination of strongly dominated strategies as performed in [4]. The value (d) indicates the density of the generated partial payoff matrices. The column (ne) indicates the total number of extreme Nash equilibria enumerated over 10 randomly generated polymatrix games. The column (np) indicates the total number of extreme perfect equilibria obtained. Finally the column (%) indicates the percentage of extreme perfect equilibria.

6.1. Discussion. The experimental results show that the percentage of extreme perfect equilibria increases with an increase of the polymatrix games density. Hence, reducing the partial payoff matrices density increases the number of extreme Nash equilibria of the polymatrix game and decreases the probability of generating perfect extreme equilibria. For $2 \times 2 \times 2$ three-person polymatrix games, Table 5 illustrates how the percentage of extreme perfect equilibria goes from 60%, for the sparsest case where the polymatrix games density is 12.5%, to 100%, for a density of 100%. Meanwhile, the average number of extreme Nash equilibria decreases from 53 to 10. This could be explained by the fact that the high number of zeros in the payoff matrices reduces the number of strictly dominated strategies and increases the number of extreme Nash equilibria by offering a number of strategies with the same zero payoff for each player. At the same time, the high number of zeros in the payoff matrices increases the number of weakly dominated strategies which decreases the probability of meeting extreme perfect equilibria. This behavior was already observed for bimatrix games [26].

7. Conclusion

Game theoretic applications have been increasingly encountered in engineering, management and political sciences. Decision makers can often be represented by autonomous agents such as hardware (central units) or software (program applications), which are unable to distinguish between a set of Nash equilibria unless a refinement procedure is used. This paper presents a new characterization of perfect Nash equilibria for polymatrix games. This characterization shows that a Nash equilibrium is perfect if and only if it is a best response to any combination of the other players pure strategic plays. While this characterization is generally not right for n-player games as shown by van Damme (see

[27, Chapter 2]), the additive structure of polymatrix games payoffs allows the undominance property of perfect equilibria to be extended to this particular class of n-player normal form games.

Moreover, we show that any perfect Nash equilibrium is a convex combination of extreme perfect Nash equilibria. As an immediate implication of this result, the set of perfect Nash equilibria of a polymatrix game is a finite union of convex polytopes. A linear programming formulation to identify perfect equilibria for polymatrix games is presented. Finally, the results of this paper are used to perform computational experiments on randomly generated polymatrix games with different size and density.

Conflict of Interests

The author declares that there is no conflict of interests regarding the publication of this paper.

Acknowledgments

This work was partially supported by KFUPM Deanship of research under Grant IN101038. This support is gratefully acknowledged. The author thanks Professors Charles Audet, Bernhard von Stengel, and Issam Louhichi for their constructive and valuable comments on the content of this paper.

References

[1] J. F. Nash, "Equilibrium points in n-person games," *Proceedings of the National Academy of Sciences of the United States of America*, vol. 36, pp. 48–49, 1950.

[2] D. Avis and K. Fukuda, "A pivoting algorithm for convex hulls and vertex enumeration of arrangements and polyhedra," *Discrete & Computational Geometry*, vol. 8, no. 1, pp. 295–313, 1992.

[3] C. Audet, P. Hansen, B. Jaumard, and G. Savard, "Enumeration of all extreme equilibria of bimatrix games," *SIAM Journal on Scientific Computing*, vol. 23, no. 1, pp. 323–338, 2001.

[4] C. Audet, S. Belhaiza, and P. Hansen, "Enumeration of all the extreme equilibria in game theory: bimatrix and polymatrix games," *Journal of Optimization Theory and Applications*, vol. 129, no. 3, pp. 349–372, 2006.

[5] C. Daskalakis, P. Goldberg, and C. Papadimitriou, "The complexity of computing a Nash equilibrium," *SIAM Journal on Computing*, vol. 39, no. 1, pp. 195–259, 2009.

[6] E. Hazan and R. Krauthgamer, "How hard is it to approximate the best Nash equilibrium?" *SIAM Journal on Computing*, vol. 40, no. 1, pp. 79–91, 2011.

[7] K. Etessami and M. Yannakakis, "On the complexity of Nash equilibria and other fixed points," *SIAM Journal on Computing*, vol. 39, no. 6, pp. 2531–2597, 2010.

[8] E. B. Yanovskaya, "Equilibrium points in polymatrix games," *Latvian Mathematical Collection*, vol. 8, pp. 381–384, 1968.

[9] J. T. Howson, "Equilibria of polymatrix games," *Management Science*, vol. 18, pp. 312–318, 1972.

[10] B. C. Eaves, "Polymatrix games with joint constraints," *SIAM Journal on Applied Mathematics*, vol. 24, pp. 418–423, 1973.

[11] J. T. Howson and R. W. Rosenthal, "Bayesian equilibria of finite two-person games with incomplete information," *Management Science*, vol. 21, no. 3, pp. 313–315, 1974.

[12] L. G. Quintas, "A note on polymatrix games," *International Journal of Game Theory*, vol. 18, no. 3, pp. 261–272, 1989.

[13] D. A. Miller and S. W. Zucker, "Copositive-plus Lemke algorithm solves polymatrix games," *Operations Research Letters*, vol. 10, no. 5, pp. 285–290, 1991.

[14] C. E. Lemke, "Bimatrix equilibrium points and mathematical programming," *Management Science*, vol. 11, pp. 681–689, 1965.

[15] R. Wilson, "Computing equilibria of N-person games," *SIAM Journal on Applied Mathematics*, vol. 21, pp. 80–87, 1971.

[16] C. E. Lemke and J. T. Howson, "Equilibrium points of bimatrix games," *SIAM Journal on Applied Mathematics*, vol. 12, pp. 413–423, 1964.

[17] S. Govindan and R. Wilson, "Computing Nash equilibria by iterated polymatrix approximation," *Journal of Economic Dynamics & Control*, vol. 28, no. 7, pp. 1229–1241, 2004.

[18] C. H. Papadimitriou and T. Roughgarden, "Computing correlated equilibria in multi-player games," *Journal of the ACM*, vol. 55, no. 3, article 14, 2008.

[19] R. Selten, "Reexamination of the perfectness concept for equilibrium points in extensive games," *International Journal of Game Theory*, vol. 4, no. 1, pp. 25–55, 1975.

[20] R. B. Myerson, *Game Theory: Analysis of Conict*, Harvard University Press, Cambridge, Mass, USA, 1997.

[21] I. Topolyan, "Existence of perfect equilibria: a direct proof," *Economic Theory*, vol. 53, no. 3, pp. 697–705, 2013.

[22] P. E. M. Borm, M. J. M. Jansen, J. A. M. Potters, and S. J. Tijs, "On the structure of the set of perfect equilibria in bimatrix games," *Operations-Research-Spektrum*, vol. 15, no. 1, pp. 17–20, 1993.

[23] J.-F. Laslier and K. van der Straeten, "Electoral competition under imperfect information," *Economic Theory*, vol. 24, no. 2, pp. 419–446, 2004.

[24] T. Watanabe and T. Yamato, "A choice of auction format in seller cheating: a signaling game analysis," *Economic Theory*, vol. 36, no. 1, pp. 57–80, 2008.

[25] P. B. Miltersen and T. B. Sørensen, "Computing a quasi-perfect equilibrium of a two-player game," *Economic Theory*, vol. 42, no. 1, pp. 175–192, 2010.

[26] S. Belhaiza, C. Audet, and P. Hansen, "A note on bimatrix game maximal Selten subsets," *Arabian Journal of Mathematics*, vol. 3, no. 3, pp. 299–311, 2014.

[27] E. E. C. van Damme, *Refinements of the Nash Equilibrium Concept*, Springer, Berlin, Germany, 1983.

[28] C. Audet, S. Belhaiza, and P. Hansen, "A new sequence form approach for the enumeration and refinement of all extreme Nash equilibria for extensive form games," *International Game Theory Review*, vol. 11, no. 4, pp. 437–451, 2009.

[29] G. Fandel and J. Trockel, "Avoiding non-optimal management decisions by applying a three-person inspection game," *European Journal of Operational Research*, vol. 226, no. 1, pp. 85–93, 2013.

[30] G. B. Dantzig, "Maximization of a linear function of variables subject to linear inequalities," in *Activity Analysis of Production and Allocation*, T. C. Koopmans, Ed., chapter 21, pp. 359–373, John Wiley & Sons, New York, NY, USA, 1951.