Hindawi Publishing Corporation
Advances in Acoustics and Vibration
Volume 2011, Article ID 195642, 6 pages
doi:10.1155/2011/195642

Research Article

Particle Swarm Optimization as an Efficient Computational Method in order to Minimize Vibrations of Multimesh Gears Transmission

Alexandre Carbonelli, Joël Perret-Liaudet, Emmanuel Rigaud, and Alain Le Bot

Laboratoire de Tribologie et Dynamique des Systèmes, UMR CNRS 5513, Ecole Centrale de Lyon, Universitè de Lyon, 36 Avenue Guy de Collongue, 69134 Ecully Cedex, France

Correspondence should be addressed to Alexandre Carbonelli, alexandre.carbonelli@ec-lyon.fr

Received 12 January 2011; Accepted 13 April 2011

Academic Editor: Snehashish Chakraverty

The aim of this work is to present the great performance of the numerical algorithm of Particle Swarm Optimization applied to find the best teeth modifications for multimesh helical gears, which are crucial for the static transmission error (STE). Indeed, STE fluctuation is the main source of vibrations and noise radiated by the geared transmission system. The microgeometrical parameters studied for each toothed wheel are the crowning, tip reliefs and start diameters for these reliefs. Minimization of added up STE amplitudes on the idler gear of a three-gear cascade is then performed using the Particle Swarm Optimization. Finally, robustness of the solutions towards manufacturing errors and applied torque is analyzed by the Particle Swarm algorithm to access to the deterioration capacity of the tested solution.

1. Introduction

The STE under load [1] is defined as the difference between the actual position of the driven gear and its theoretical position for a very slow rotation velocity and for a given applied torque. Its characteristics depend on the instantaneous situations of the meshing tooth pairs. Under load at very low speed (static transmission error), these situations result from tooth deflections, tooth surface modifications, and manufacturing errors. Under operating conditions, STE generates dynamic mesh force transmitted to shafts, bearings, and to the crankcase. The vibratory state of the crankcase is the main source of the radiated noise [2]. To reduce the radiated noise, the peak-to-peak amplitude of the STE fluctuation needs to be minimized by the mean of tooth modifications. It consists in micro-geometrical modifications listed below and displayed on Figure 1:

(i) tip relief magnitude $x_{\mathrm{rel},i}$, that is, the amount of material removed on the tooth tip,

(ii) start relief diameter $\Phi_{\mathrm{rel},i}$, that is, the diameter at which the material starts to be removed until the tooth tip. Linear or parabolic corrections can be done,

(iii) added up crowning centered on the active tooth width $C_{\beta,i/j}$.

Many authors [3–11] worked on the optimization of tooth modifications in simple mesh systems. Only few of them [12–14] considered multimesh systems as cascade of gears where idler gear modifications affect two meshes.

In this paper, the application is done on a cascade of three helical gears, displayed on Figure 2, for a total of 8 parameters (tip relief and start diameter for the relief for each gear, and added up crowning for a pair of meshing gears). Multiparameter optimization can easily become a difficult task if the algorithm used is not well adapted. We will show that the Particle Swarm Optimization (PSO) fits efficiently with that kind of problematic. Indeed, it permits to select a set of solutions more or less satisfying in the studied torque

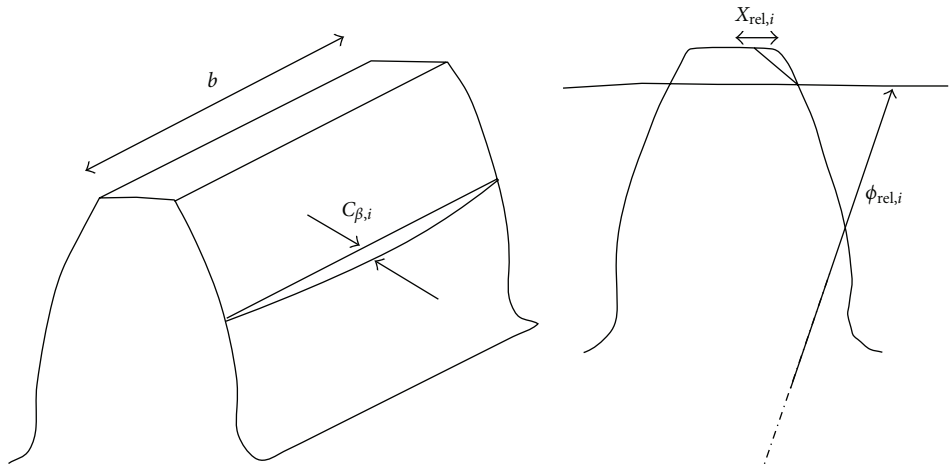

Figure 1: Crowning $C_{\beta,i/j}$, tip relief $x_{\mathrm{rel},i}$, and start relief diameter $\Phi_{\mathrm{rel},i}$.

range. Moreover, the robustness of the optimized solutions is studied regarding large manufacturing errors, lead, and involute alignment deviations. An additional difficulty arises because the modifications performed have to be efficient on a large torque range. The dispersion associated is the source of the strong variability of the dynamic behavior and of the noise radiated from geared systems (sometimes up to 10 dB [15, 16]).

2. Calculation of Static Transmission Error

The calculation of STE is relatively classical [17]. For each position θ of the driving gear, a kinematical analysis of the mesh allows determination of the theoretical contact line on the mating surfaces of gearing teeth within the plane of action.

Equation system which describes the elastostatic deformations of the teeth can be written as follows [17]:

$$\begin{gathered}\mathbf{H}^{\mathbf{u},\mathbf{F}}(\omega = 0) \cdot \mathbf{F} = \delta(\theta) - \mathbf{e} - \mathbf{hertz}(\mathbf{F}),\\ \sum \mathbf{F_i} = \mathbf{F}.\end{gathered} \tag{1}$$

The following data are needed to perform this interpolation:

(i) initial gaps **e** between the teeth: they are function of the geometry defects and the tooth modifications,

(ii) compliance matrix $\mathbf{H}^{\mathbf{u},\mathbf{F}}$, of the teeth coming from interpolation functions calculated by a Finite Element model of elastostatic deformations,

(iii) Hertz deformations **hertz**, calculated according to Hertz theory.

The calculation of the actual approach of distant teeth $\boldsymbol{\delta}$ on the contact line for each position θ permits to access the time variation of STE and its peak-to-peak amplitude E_{pp}, as a function of the applied torque (or the transmitted load F) and the teeth modifications. We chose linear correction

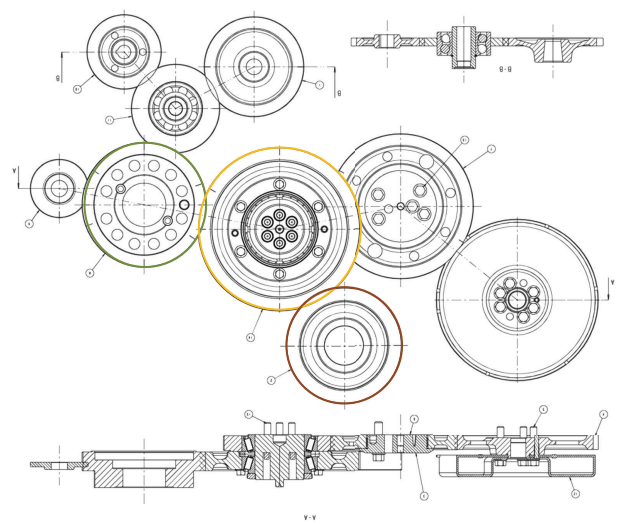

Figure 2: Cascade of the 3 helical gears studied: 50 teeth/72 teeth/54 teeth.

for tip reliefs and parabolic correction for the crownings. All the modifications allow to reduce the STE fluctuation. The most influent parameter is the tip relief magnitude. Indeed, removing an amount of material on the tooth tip permits to make up for the advance or late position of the tooth induced by elastic deformations.

For the robustness study, the manufacturing errors are also considered and displayed on Figure 3. The manufacturing is not directly parameters of the optimization but as they have an effect on the STE fluctuation they must be considered in the robustness study.

(i) Lead deviation: $f_{H\beta,i/j} = f_{H\beta,i} + f_{H\beta,j}$,

(ii) Involute alignment deviation: $f_{g\alpha,i}$ and $f_{g\alpha,j}$.

A fitness function f to minimize is defined as the integral of STE peak-to-peak amplitude over torque range

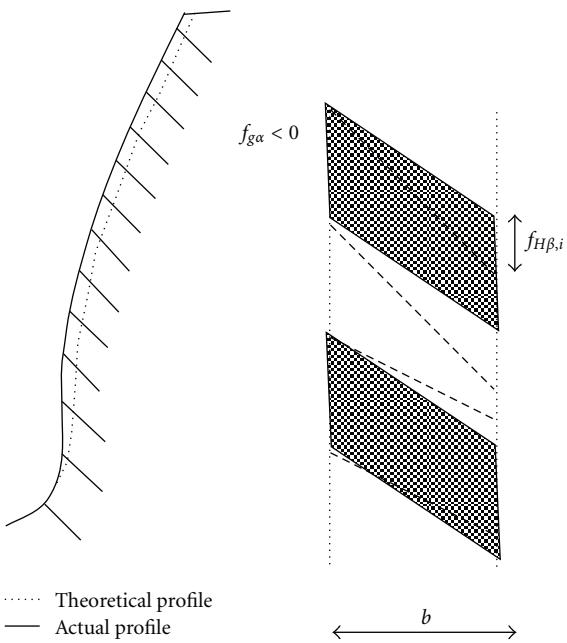

Figure 3: Involute alignment deviation $f_{g\alpha}$ and lead deviation $f_{H\beta}$.

$[C_{\min} - C_{\max}]$ approximated by Gaussian quadrature with 3 points.

$$f_{i,j} = \int_{C_{\min}}^{C_{\max}} E_{\text{pp}}(C)dC \longrightarrow \sum_{i=1}^{i=3} a_i E_{pp}(C_i). \tag{2}$$

The fitness function of the whole cascade is then

$$f = f_{i,j} + f_{k,j}. \tag{3}$$

We have thereby 8 parameters for the optimization leading to a combinatorial explosion. Meta-heuristic methods allow an efficient optimization, and we chose the Particle Swarm Optimization [18]. Obviously in that kind of problematic, the aim cannot be to access to the optimum optimorum but only different local minima whose performances can be quickly estimated over the torque range by a home-built gain function

$$G_0 = 10\log_{10}\left(\frac{f_{S_i}}{f_{\text{ref}}}\right), \tag{4}$$

where f_{ref} corresponds to the value of the fitness function for a standard nonoptimized gear.

3. Particle Swarm Algorithm

The principle of this method is based on the stigmergic behavior of a population, being in constant communication and exchanging information about their location in a given space [18]. Typically bees, ants, or termites are animals functioning that way. In our general case, we just consider particles which are located in an initial and random position in a hyperspace built according to the different optimization parameters. They will then change their position and their speed to search for the "best location," according to a defined criterion of optimization. It is commonly called the fitness function which has to be maximized or minimized depending on the problem.

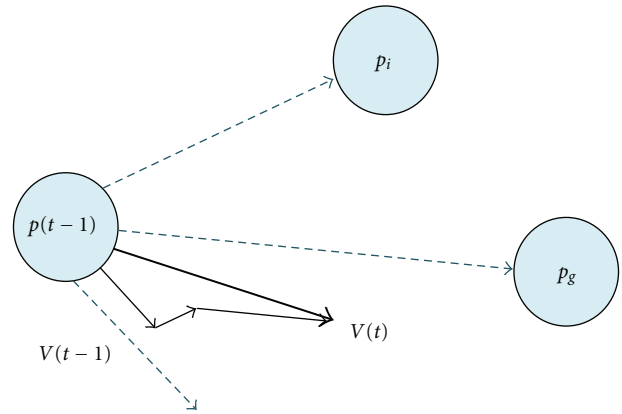

Figure 4: Particle Swarm algorithm representation.

For each iteration and each particle, a new speed and so a new position is reevaluated considering:

(i) the current particle velocity $V(t-1)$,

(ii) its best position p_i,

(iii) the best position of neighbors p_g.

The algorithm can thus be wrapped up to the system of (5) and Figure 4:

$$\begin{aligned}\mathbf{V}(t) &= \varphi_0\mathbf{V}(t-1) + \varphi_1\mathbf{A_1}[\mathbf{p}_i - \mathbf{p}(t-1)] \\ &\quad + \varphi_2\mathbf{A_2}\left[\mathbf{p}_g - \mathbf{p}(t-1)\right], \\ \mathbf{p}(t) &= \mathbf{p}(t-1) + \mathbf{V}(t-1).\end{aligned} \tag{5}$$

$\mathbf{A_1}$ and $\mathbf{A_2}$ represent a random vector of number between 0 and 1 and the parameters of these equations are taken following Trelea and Clerc [19–21]: $\varphi_0 = 0.729$ and $\varphi_1 = \varphi_2 = 1.494$.

4. Robustness Study

First the tolerance range $\mathbf{D_0}$ of a solution $\mathbf{x_0}$ has been defined, using a vector $\mathbf{\Delta x} = \{\Delta x_1, \Delta x_2, \ldots, \Delta x_N\}$, which takes in account the parameters variability. The gears studied have a precision class 7 (ISO 1328). Moreover, the manufacturing errors distribution is considered to be uniform over the range, which is the worst possible case in. Lead and involute alignment deviations and torque variation are associated in a 14-dimensionnal vector as following:

$$\begin{aligned}\Delta\mathbf{x} = \Big\{&\Delta X_{\text{dép},i}, \Delta\Phi_{\text{dép},i}, f_{g\alpha,i}, \Delta C_{\beta,i/j}, f_{H\beta,\,i/j}, \Delta X_{\text{dép},j}, \Delta\Phi_{\text{dép},j}, \\ &f_{g\alpha,j}, \ldots, \Delta C_{\beta,l/j}, f_{H\beta,l/j}, \Delta X_{\text{dép},l}, \Delta\Phi_{\text{dép},l}, f_{g\alpha,l}, \Delta C\Big\},\end{aligned} \tag{6}$$

where i, j, and l correspond to, respectively, the gears with 50, 72, and 54 teeth.

Table 1: Parameters ranges.

Number of teeth	$Z = 54$	$Z = 72$	$Z = 50$
Tip relief magnitude and tolerance [μm]	[15–150] ± 15	[0–150] ± 15	[15–150] ± 15
Start relief diameter and tolerance [mm]	[230–241] ± 0.46	[200–215] ± 0.46	[153–168] ± 0.40
Added up crowning and tolerance [μm]	[8–40] ± 8		—
	—	[8–40] ± 8	
Lead deviation and tolerance [μm]	0 ± 32		—
	—	0 ± 32	
Involution alignment dev. and tolerance [μm]	0 ± 12	0 ± 12	0 ± 12

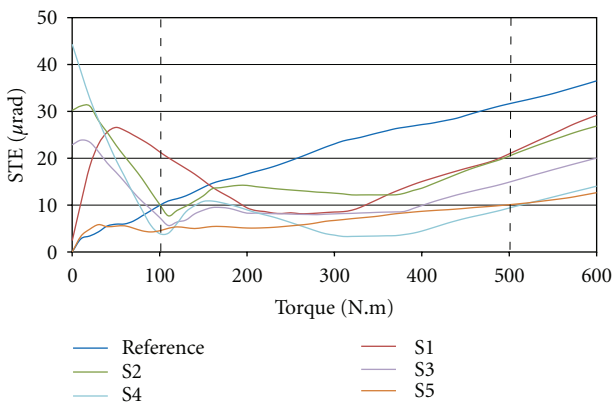

Figure 5: Optimized and reference solutions versus applied torque - - - - torque range boundaries.

Then, the tolerance range $\mathbf{D_0}$ can be written as

$$\mathbf{D_0} = \{\mathbf{x} : \mathbf{x} \in \mathbf{R^N} \mid \mathbf{x_0} - \Delta\mathbf{x} < \mathbf{x} < \mathbf{x_0} + \Delta\mathbf{x}\}. \quad (7)$$

Contrary to the case studied by Sundaresan et al. [22], the robustness study concerns micro-geometrical modifications instead of macrogeometrical parameters (i.e., teeth number). The tolerance ranges are moreover noticeably larger than the ones considered by Bonori et al. [10], especially for the tip relief modifications. The fitness function cannot be assumed monotonic and the study of the extreme boundaries of the problem is not sufficient. The PSO is then used to locate the maximum of the fitness function in the hyperspace $\mathbf{D_0}$, in order to analyze robustness of the solutions. The new values for the parameters which maximize the fitness function define the "degenerated solution," noted $\mathbf{x_d}$:

$$\mathbf{x_d} \in \mathbf{D_0}, \quad f(\mathbf{x_d}) = \max(f(\mathbf{x}) \mid \mathbf{x} \in \mathbf{D_0}). \quad (8)$$

With this additional criterion, optimal solution corresponds to the less deteriorated rather than the minimal E_{pp}.

5. Results

The cascade of three helical gears has to be optimized for torques from 100 Nm up to 500 Nm. A reference solution, with standard and not optimized tooth modifications, is used to emphasize the benefits of the Particle Swarm optimization.

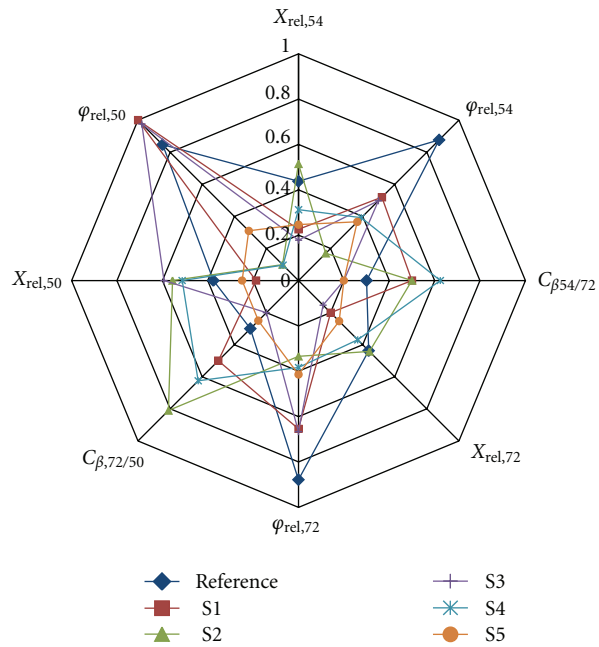

Figure 6: Optimized parameters of the solutions.

The PSO calculations have been performed using a population of 25 particles and stopped when a precision of 10^{-2} μrad for peak-to-peak amplitude E_{pp} is reached. The algorithm stops the calculation when no improvement is found 50 times successively. All the following results have converged after 250 to 400 iterations. That corresponds to 7500 to 10000 evaluations of the fitness function (instead of 10^{14} for a Monte-Carlo experiment). Table 1 lists the parameters ranges.

In order to illustrate the optimization process, Figure 5 displays 5 selected solutions—S1 to S5—corresponding to 5 local minima among the computed ones which all obviously are better than the reference solution in terms of minimal E_{pp}. Figure 6 displays the optimized parameters of the solutions rescaled in function of their extremum values.

According to the gain function (4), we can easily pick up the best solutions of the selected ones. Following the results listed in Table 2, solution S5, which provides −4.2 dB of improvement compared to the reference solution, should be selected.

Table 2: Gain of the computed optimal solutions compared to the reference solution.

Configuration	Gain G_0 [dB]
S1	−1.6
S2	−1.9
S3	−3.3
S4	−3.7
S5	−4.2

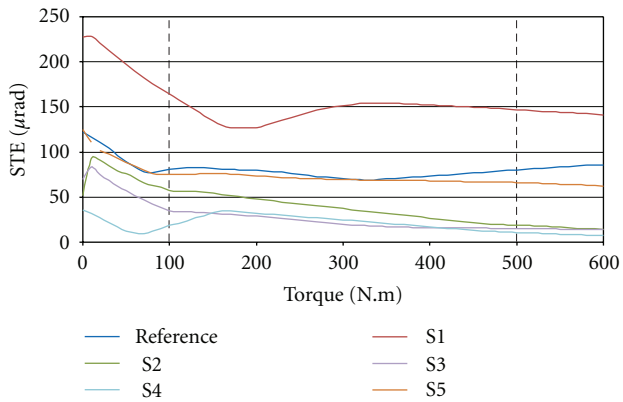

Figure 7: Degenerated solutions versus applied torque - - - - Torque range boundaries.

Figure 7 displays the deteriorated solutions.

The first analysis of the deteriorating capacity of the solutions can be done using gain function (9) and listing results in Table 3:

$$G_1 = 10\log_{10}\left(\frac{f_{\text{non-deteriorated}}}{f_{\text{deteriorated}}}\right). \quad (9)$$

The deteriorated reference solution has a gain of +6.7 dB compared with the initial reference solution. The solution S5 is worse considering the gain function (9), but its fitness function value is still less than the deteriorated reference solution one. On the other hand, the previous selected solution S4 appears as the best one with only +2.3 dB of deterioration in the gain function (9) sense.

The second analysis of the deteriorating capacity of the solutions can be done using gain function (10) and listing results in Table 4:

$$G_2 = 10\log_{10}\left(\frac{f_{S_i,\ \text{deteriorated}}}{f_{\text{ref, deteriorated}}}\right). \quad (10)$$

The solution S1 emphasizes the importance of considering the deteriorating capacity. Indeed, although the optimal solution brings an improvement compared to the initial reference solution, it is likely to be less efficient taking in account the possible manufacturing errors. The previous choice has to be reconsidered. On the other hand, the solution S4 provides a good improvement of −3.7 dB compared to the reference solution and is quite robust as a gain of −6.2 dB is observed if S4 deteriorated solution is compared with the deteriorated reference solution.

Table 3: Gain of the degenerated solutions compared to optimal solutions.

Configuration	Gain G_1 [dB]
Reference	+6.7
S1	+11.3
S2	+6.0
S3	+6.1
S4	+2.3
S5	+11.3

Table 4: Gain of the degenerated solutions compared to the reference degenerated solution.

Configuration	Gain G_2 [dB]
S1	+2.8
S2	−2.6
S3	−4.2
S4	−6.2
S5	−0.4

6. Conclusion

Optimization with an efficient heuristic method (Particle Swarm) has been done to determinate optimized parameters of a multimesh problem. The algorithm permits the gathering of many solutions which all lead to really satisfying results over the torque range studied thank to an integration of STE peak-to-peak amplitude by Gaussian quadrature. Finally, a robustness criterion has been defined based on the deteriorating capacity of the solutions which permits to do a more accurate choice about the optimal tooth modifications. Indeed, there are many ways of estimating the robustness of the solutions. In some industrial point of view, a solution which is less efficient than another but much more robust should be preferably chosen.

Acknowledgments

This work has been supported by ANR (National Research Agency, contract number: ANR-08-VTT-007-02), ADEME (French Environment and Energy Management Agency), and Lyon Urban Trucks&Bus competitiveness cluster. The authors acknowledge gratefully this support and especially thank Denis BARDAY from Renault Trucks Company for his inestimable help.

References

[1] L.S. Harris, "Dynamic loads on the teeth of spur gears," in *Proceedings of the Institution of Mechanical Engineers*, vol. 172, pp. 87–112, 1958.

[2] D. B. Welbourn, "Fundamental knowledge of gear noise—a survey," in *Proceedings of the Conference on Noise and Vibrations of Engines and Transmissions*, vol. C177/79, pp. 9–29, Cranfield Institute of Technology, July 1979.

[3] M. S. Tavakoli and D. R. Houser, "Optimum profile modifications for the minimization of static transmission errors of spur gears," *Journal of Mechanism, Transmissions, and Automation in Design*, vol. 108, no. 1, pp. 86–95, 1986.

[4] A. Kahraman and G. W. Blankenship, "Effect of involute tip relief on dynamic response of spur gear pairs," *Journal of Mechanical Design*, vol. 121, no. 2, pp. 313–315, 1999.

[5] K. Umezawa, H. Houjoh, S. Matsumura, and S. Wang, "Investigation of the dynamic behavior of a helical gear system dynamics of gear pairs with bias modification," in *Proceedings of the 4th World Congress and Gearing and Power Transmissions*, vol. 3, pp. 1981–1990, Paris, France, 1999.

[6] M. Beghini et al., "A method to define profile modification of spur gear and minimize the transmission error," in *Proceedings of the Fall Technical Meeting of the American Gear Manufacturers Association (AGMA '04)*, Milwaukee, Wis, USA, October 2004.

[7] M. Umeyama, "Effects of deviation of tooth surface errors of a helical gear pair on the transmission error," *Transactions of the Japan Society of Mechanical Engineers, Part C*, vol. 61, no. 587, pp. 3101–3107, 1995.

[8] R. Guilbault, C. Gosselin, and L. Cloutier, "Helical gears, effects of tooth deviations and tooth modifications on load sharing and fillet stresses," *Journal of Mechanical Design*, vol. 128, no. 2, pp. 444–456, 2006.

[9] A. Kahraman, P. Bajpai, and N. E. Anderson, "Influence of tooth profile deviations on helical gear wear," *Journal of Mechanical Design*, vol. 127, no. 4, pp. 656–663, 2005.

[10] G. Bonori, M. Barbieri, and F. Pellicano, "Optimum profile modifications of spur gears by means of genetic algorithms," *Journal of Sound and Vibration*, vol. 313, no. 3–5, pp. 603–616, 2008.

[11] S. Kurokawa, Y. Ariura, and M. Ohtahara, "Transmission errors of cylindrical gears under load—influence of tooth profile modification and tooth deflection," in *Proceedings of the 7th International Power Transmission and Gearing Conference*, DE 88, pp. 213–217, American Society of Mechanical Engineers, Design Engineering Division, San Diego, Calif, USA, October 1996.

[12] T. Erltenel and R. G. Parker, "A static and dynamic model for three-dimensional, multi-mesh gear systems," in *Proceedings of the ASME International Design Engineering Technical Conferences and Computers and Information in Engineering Conference (DETC '05)*, vol. 5, pp. 945–956, Long Beach, Calif, USA, September 2005.

[13] H. Vinayak, R. Singh, and C. Padmanabhan, "Linear dynamic analysis of multi-mesh transmissions containing external, rigid gears," *Journal of Sound and Vibration*, vol. 185, no. 1, pp. 1–32, 1995.

[14] J. Lin and R. G. Parker, "Mesh stiffness variation instabilities in two-stage gear systems," *Journal of Vibration and Acoustics*, vol. 124, no. 1, pp. 68–76, 2002.

[15] N. Driot, E. Rigaud, J. Sabot, and J. Perret-Liaudet, "Allocation of gear tolerances to minimize gearbox noise variability," *Acta Acustica United with Acustica*, vol. 87, no. 1, pp. 67–76, 2001.

[16] N. Driot and J. Perret-Liaudet, "Variability of modal behavior in terms of critical speeds of a gear pair due to manufacturing errors and shaft misalignments," *Journal of Sound and Vibration*, vol. 292, no. 3–5, pp. 824–843, 2006.

[17] E. Rigaud and D. Barday, "Modelling and analysis of static transmission error of gears: effect of wheel body deformation and interactions between adjacent loaded teeth," *Mécanique Industrielle et Matériaux*, vol. 51, no. 2, pp. 58–60, 1998.

[18] R. C. Eberhart and J. Kennedy, "A new optimizer using particle swarm theory," in *Proceedings of the 6th International Symposium on Micro Machine and Human Science*, pp. 39–43, IEEE Service Center, Nagoya, Japan, October 1995.

[19] I. C. Trelea, "The particle swarm optimization algorithm: convergence analysis and parameter selection," *Information Processing Letters*, vol. 85, no. 6, pp. 317–325, 2003.

[20] M. Clerc, "The swarm and the queen: towards a deterministic and adaptive particle swarm optimization," in *Proceedings of the International Conference on Evolutionary Computation (ICEC '99)*, pp. 1951–1957, IEEE, Washington, DC, USA, 1999.

[21] M. Clerc and J. Kennedy, "The particle swarm—explosion, stability, and convergence in a multidimensional complex space," *IEEE Transactions on Evolutionary Computation*, vol. 6, no. 1, pp. 58–73, 2002.

[22] S. Sundaresan, K. Ishii, and D. R. Houser, "A robust optimization procedure with variations on design variables and constraints," *Engineering Optimization*, vol. 24, no. 2, pp. 110–118, 1995.