Hindawi
Advances in Civil Engineering
Volume 2018, Article ID 5906279, 11 pages
https://doi.org/10.1155/2018/5906279

Research Article

Earthquake Design of Reinforced Concrete Buildings Using NSGA-II

Herian A. Leyva,[1] Edén Bojórquez,[1] Juan Bojórquez,[1] Alfredo Reyes-Salazar,[1] José H. Castorena,[2] Eduardo Fernández,[1] and Manuel A. Barraza[1]

[1]*Facultad de Ingeniería, Universidad Autónoma de Sinaloa, Culiacán, Mexico*
[2]*Facultad de Ingeniería, Universidad Autónoma de Sinaloa, Mochis, Mexico*

Correspondence should be addressed to Edén Bojórquez; eden@uas.edu.mx

Received 5 July 2018; Revised 19 September 2018; Accepted 22 October 2018; Published 27 November 2018

Academic Editor: Eric Lui

In the present study, the optimal seismic design of reinforced concrete (RC) buildings is obtained. For this purpose, genetic algorithms (GAs) are used through the technique NSGA-II (Nondominated Sorting Genetic Algorithm), thus a multiobjective procedure with two objective functions is established. The first objective function is the control of maximum interstory drift which is the most common parameter used in seismic design codes, while the second is to minimize the cost of the structure. For this aim, several RC buildings are designed in accordance with the Mexico City Building Code (MCBC). It is assumed that the structures are constituted by rectangular and square concrete sections for the beams, columns, and slabs which are represented by a binary codification. In conclusion, this study provides complete designed RC buildings which also can be used directly in the structural and civil engineering practice by means of genetic algorithms. Moreover, genetic algorithms are able to find the most adequate structures in terms of seismic performance and economy.

1. Introduction

The scientific advances in technology and computation resources have allowed the development of new optimization procedures in recent years, such as the genetic algorithms optimization method. This approach was initially discussed and proposed by Holland, and it is based on the natural selection theory established by Charles Darwin [1, 2]. The main characteristic of GAs is the survival, adaptation, crossing, and mutation of species through time. The individuals with best adaptive capacity have more likelihood of surviving and obtaining descendants. For this reason, the genetic code of the best individuals is maintained, to obtain descendants with equal or better adaptation capacity, thus the species evolve.

Mathematically, the GAs technique consists in the generation of an initial population (usually random) of possible solutions represented by binary codification. The weakest or most misfit individuals are eliminated, and the strongest survive and are reproduced. The adaptation level of each individual is measured with a value assigned in one objective function [3]. A typical genetic algorithm uses three basic operators: selection, crossing, and mutation:

(i) Selection of individuals: it is based on qualifying each individual according to their adaptation and determining which ones survive and pass to the next generation.

(ii) Crossing: the aim of the crossing is to create new individuals with the exchange of genetic information (usually binary codification) among those most adapted, similar to that used by a natural organism in sexual reproduction.

(iii) Mutation: it is used to introduce random changes in the population of a generation. The mutation may be beneficial as it allows introducing diversity in a population.

Once the previous steps are completed, a new generation is obtained, and the process is repeated until reaching the

number of generations desired. Currently, this method is applied in many areas, and its results depend on the complexity of the problem, number of possible solutions, size of the population, among others. The combination of GAs with structural and seismic engineering can create a tool to improve conventional structural design; the required computational time to obtain satisfactory results is small even without predesigned elements by a skilled designer. With this tool, it is possible to obtain optimal solutions that satisfied the strength and displacement structural criteria under gravitational and accidental loads. GAs have been used extensively for civil and structural engineering purposes. For example, genetic algorithms have been applied in record selection for the seismic analysis of structures [4]. Designing of steel structures was done, from trusses [5–8], 25-bar space tower [9], to the optimal design of steel frames by their comparisons with the conventional design [10–14]. For reinforced concrete structures, there is a larger number of possible solutions compared with steel buildings, due to the different amount of reinforcing steel in the sections. In this case, most of the research studies developed are focused on the design of beams [15–17] and a few in the frames design [18]. This method is also used for composite beams [19] and multistory steel-concrete composite building designs [20]. Most of the studies aimed at designing RC structures are based on the optimization of a single objective function; however, most real-life problems have several objectives that should be satisfied. For example, a building under earthquake should be able to satisfy the resistance and displacement requirements. Thus, it is necessary to use multiobjective algorithms, as in the case of SPEA2, MOMGA-II, PAES, NSGA-II, among others. Kelesoglu [21] proposed a method for space truss design minimizing the weight and the displacements of the structures. Barraza [22] designed steel frames using NSGA-II and PSO techniques who searched to minimize the weight and a drift function achieving optimal results. In reinforced concrete frames, most of the studies have been carried out for 2D models or only elements such as beams design, in some cases seeking to minimize the cost and the maximum displacement [23] or to minimize the cost of repair or replacement of structural members [24]. The aim of this study is to illustrate the application of GAs for multiobjective design of 3D RC-framed buildings under earthquake loads obtained by the static method in accordance with the Mexico City Building Code. It is important to say that based on the literature review of the authors, there are no studies aimed at providing complete designed RC buildings which also can be used directly in the structural and civil engineering practice by means of GAs.

In the present work, the NSGA-II approach is used considering two objective functions: structural cost and maximum interstory drift (MID), besides constraint variables that help to obtain constructively viable results in a fast way. For the present study, databases of 2048 columns, 2048 beams, and 1024 slabs were made with their cost and resistant strength by means of the MCBC. The transversal sections are represented by binary codification of 11 bits for beams and columns and 10 bits for slabs to simulate the genetic information of individuals (Chapters 3 and 5). In the next chapter, a brief description of the NSGA-II method is provided.

2. Nondominated Sorting Genetic Algorithm (NSGA-II)

The technique NSGA-II proposed by Deb et al. [3] and Deb and Gulati [5] is used in this study for the multiobjective optimization design of 3D structural concrete buildings under seismic forces. The main idea of the NSGA-II approach is to find a set of solutions that are good among the different objectives, obtaining several satisfactory solutions [25]. For example, let us suppose that it is necessary to minimize all objective functions in a multiobjective problem. Figure 1 shows all the feasible solutions of the optimization problem; note that the nondominated solutions correspond to those which are not worse than other solutions by considering all the objectives, or if the solutions are better than others in at least one objective function, and these solutions represent the Pareto frontier or Pareto optimal solutions (POS). In general, NSGA-II is implemented with an effective sorting method based on individual ranking by nondominated sorting and a crowded distance sorting which evaluates the population density of solutions in the same rank. The typical steps of the NSGA-II approach are as follows:

(1) An initial parent population P0 is randomly generated, and the nondominated sorting is implemented on P0 where each individual is ranked based on the dominance relation in the objective space.

(2) Individual within each rank is sorted again based on the crowded distance where the population density is evaluated. For further information about the crowded distance, see [5].

(3) Individuals selected by a tournament selection are stored in an intermediate mating pool which has a high probability of occurrence of better ranked and less crowded solutions.

(4) In the mating pool, genetic operations such as crossover and mutation generate the child populations Qt where subscript "t" denotes the number of generations.

(5) An integrated population Rt is created by combining Pt and Qt, and fitness values are assigned to all individuals by the nondominated sorting and crowded distance sorting.

(6) Finally, individuals with better fitness are selected by elitist sorting and these become the individual's parents Pt + 1.

(7) Steps 2–6 are repeated (while $t < \mathrm{NG}$), where NG represents the number of generations required.

(8) Individuals with rank one among parents at $\mathrm{Pt}_{\max}$ are the POS.

It is important to say that through these selection rules, the algorithm works only with the best individuals that have

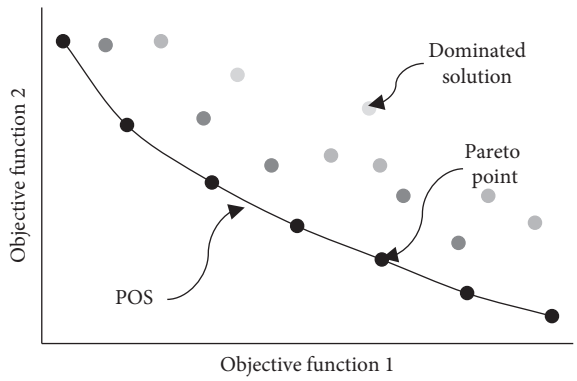

Figure 1: Pareto optimal solutions.

been generated and promises to obtain the best possible solutions. In this study, the two objective functions are the cost and maximum interstory drift. For this propose, it is necessary to determine the external conditions to which individuals are evaluated to calculate their adaptation level and classify them according to nondominance. These conditions change according to the individual properties and are obtained as it is indicated in the following chapter.

3. Design Parameters and Database for the RC Elements

Although several studies aimed at obtaining an optimal design through genetic algorithms, as it was previously discussed, most of them use steel structures (especially trusses) and only reduce the maximum displacement and the total weight without taking into account if the final system or design can be built in the real world (constructive feasibility). Moreover, usually the studies select defined loads. Thus, there is a huge gap to obtain earthquake-resistant structures designed via GAs. In order to obtain safety buildings under earthquakes by means of genetic algorithms, in this study, three RC structures are designed accounting for all the design parameters suggested by the MCBC. For example, the security of a structure must be verified for the effect of permanent, variable, and accidental actions combinations considering the following equations:

$$\begin{aligned} &\text{combination 1:} \quad 1.4\ \text{DL} + 1.4\ \text{LL}, \\ &\text{combination 2:} \quad 1.1\ \text{DL} + 1.1\ \text{LL} + 1.1\ \text{SL}, \end{aligned} \tag{1}$$

where DL, LL, and SL are dead, live, and seismic loads, respectively.

To calculate the seismic loads, the MCBC suggests that the effect of an earthquake in a structure must be obtained by simulating horizontal forces acting on each of the points where the mass is supposed to be concentrated at each floor. The seismic forces are combined taking into account two horizontal directions of the earthquake, thus the structure is analyzed considering 100 percent and 30 percent of two orthogonal directions. Equation (2) is used in the present study to estimate the seismic design forces along the selected RC buildings.

$$S_{Fi} = \frac{c}{Q} W_i h_i \frac{\sum W_i}{\sum W_i h_i}, \tag{2}$$

where S_{Fi} is the horizontal force acting on story i, c is the seismic coefficient, $W_i h_i$ is the weight of the level i multiplied by its height, Q is the seismic behavior factor or ductility, W_i is the sum of the weights of all the stories, and $\sum W_i h_i$ is the sum of the weights multiplied by their heights of all stories.

Most seismic codes use the concept of design spectrum defined by dividing the elastic response spectrum through a reduction or behavior factor Q. The value of Q depends on the parameters that directly affect the energy dissipation capacity of the structure, namely, ductility, added viscous damping, strength reserves coming from its redundancy, and overstrength of individual members [26]. In the MCBC regulation, the behavior factor can take values of 1, 2, 3, or 4 for elastic analysis according to the constructive system used. The frames that will be designed in this work correspond to a behavior factor equal to 3.

The values of Equations (3)–(5) are obtained from Table 1, where c is the maximum value of the pseudo-acceleration (Sa) design spectrum in units of Sa/g, a_0 is the initial value of the spectrum, T_a and T_b are the characteristics periods, and r is an exponent.

The equations used to calculate the Sa design spectra are

$$\text{Sa} = a_0 + (c - a_0)\frac{T}{T_a}, \quad \text{if } T < T_a, \tag{3}$$

$$\text{Sa} = c, \quad \text{if } T_a \le T \le T_b, \tag{4}$$

$$\text{Sa} = c\left(\frac{T_b}{T}\right)^r, \quad \text{if } T > T_b. \tag{5}$$

The buildings to be designed are located in the lake area of Mexico City corresponding to zone III_b and represented by the following spectrum (Figure 2).

It is important to say that the RC buildings are constituted by structural elements as slabs, beams, and columns. For this reason, a large database was developed that takes into account the materials and labor cost of each one. To represent the genetic information of each section, binary code is used. A 1-bit code can represent 2 sections since it can only have 2 different configurations: 0 or 1. The number of individuals that a binary code can represent depends on the number of bits, and it is obtained by the expression: 2^{bits}. If we work with 10 bits, the first section is represented by

$$0\ 0\ 0\ 0\ 0\ 0\ 0\ 0\ 0\ 0 = 1, \tag{6}$$

and a total of 1024 (2^{10}) sections can be represented.

In the case of concrete, it is considered with the compressive strength of 250 kg/cm^2 and the yield strength of reinforcement steel of 4200 kg/cm^2. The main characteristics of the beams, columns, and slabs selected to create the database are the following:

Beams. The heights of the transversal sections vary from 1.5 to 2.2 times the base using a multiple of 5 cm starting

Table 1: Parameter values to calculate the acceleration spectra.

Zone	c	a_0	T_a	T_b	r
I	0.16	0.04	0.2	1.35	1.0
II	0.32	0.08	0.2	1.35	1.33
III_a	0.40	0.10	0.53	1.8	2.0
III_b	0.45	0.11	0.85	3	2.0
III_c	0.40	0.10	1.25	4.2	2.0
III_d	0.30	0.10	0.85	4.2	2.0

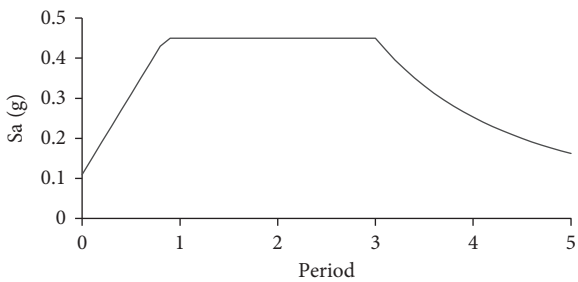

Figure 2: Design spectrum of Mexico City zone III_b.

with a base of 20 cm. Corrugated bar numbers 3 to 8 are used with the same distribution in the lower and upper parts. Bars number 2 and 3 are used as stirrups with different separations. A total 2048 sections are considered.

Columns. Square columns were used varying in cross sections from 20 cm to 95 cm. Corrugated bar numbers 3 to 10 are used for reinforcement, and the longitudinal reinforcement area vary from 1% to 4% of the transversal section. Bar number 3 are used as stirrups with different separations. A total 2048 sections are used.

Slabs. Heights from 10 cm to 25 cm were proposed with different reinforcements in the upper and lower parts. Corrugated bars number 3 and 4 are used. A total 1024 sections are considered.

The total cost of the frame is obtained by multiplying the unit price of each structural element by its volume.

4. Objective Functions

The aim of the present study is the seismic design of reinforced concrete buildings using a multiobjective genetic algorithm. A parameter used to determine the performance of buildings is the maximum interstory drift. For this reason, in this study, the first objective function is aimed at designing frames with MID close to the limit allowable provided by the Mexican Code, to guarantee an adequate seismic performance. As the second objective, it is proposed to minimize the total cost of the volume of materials in the frame. The mathematical expressions that calculate the peak drift and cost objective functions proposed are

$$F_1 = I_{\mathrm{MID}} C_{\mathrm{slab}}^5 C_{\mathrm{d}}^3 C_{\mathrm{con}} C_{\mathrm{s}}^{(1/10)}, \tag{7}$$

$$F_2 = C^{(1/3)} C_{\mathrm{slab}}^5 C_{\mathrm{d}}^3 C_{\mathrm{con}} C_{\mathrm{s}}^{(1/10)}, \tag{8}$$

where F_1 and F_2 are the objective functions of drift and cost, respectively, and all the C terms are designed constraints or penalty functions that are described below. Due to the large number of restrictions that exist in the proposed study, the objective functions had to be calibrated and evaluated up to obtain one that provide an evolution of the individuals with the best results. The selected exponents in the equations let the algorithm quickly discard those that do not comply with slab and connection constraints. For this reason, the algorithm works with those individuals who depend on the other 2 restrictions. Then the program focuses on those individuals who should satisfy the criteria of resistance and control of the maximum interstory drift.

Function F_1 has the objective to find the lightest sections comparing the maximum interstory drift with a target drift (TD), as shown in Equation (9). In this study, the TD is 0.012 as suggested by the Mexican City Building Code:

$$I_{\mathrm{MID}} = \frac{\mathrm{TD}}{\mathrm{MID}}. \tag{9}$$

If the MID is large than TD, then the following expression is used:

$$I_{\mathrm{MID}} = \left(\frac{\mathrm{MID}}{\mathrm{TD}}\right)^3, \tag{10}$$

where I_{MID} is the objective function of MID. If TD and MID are equal, I_{MID} will be equal to 1. Therefore, values close to 1 represent frames with displacements close to the limit allowable established by the MCBC regulation.

Moreover, with the function F_2, it is intended to obtain the most economical sections taking into account the materials and labor cost of the building:

$$C = C_{\mathrm{r}} + C_{\mathrm{c}} + C_{\mathrm{l}}, \tag{11}$$

where C_{r}, C_{c}, C_{l}, and C are reinforcement, concrete, labor, and total costs, respectively.

The other parameters are used as design constraints if they do not satisfy the requirements of displacement, strength, stiffness, or constructive feasibility. These parameters start with a value equal to 1, and are obtained with the following equations.

If the slab is slender than a minimum,

$$C_{slab} = \left(1 - \frac{\mathrm{St}}{\mathrm{Mst}}\right), \tag{12}$$

or 2 cm thicker than the required,

$$C_{slab} = \left(1 - \frac{\mathrm{Mst}}{\mathrm{St}}\right), \tag{13}$$

where C_{slab} is the constraint function for the slab, Mst is the minimum adequate thickness for the slab, and St is the slab thickness. If the beams show excessive deformation,

$$C_{\mathrm{d}} = \sum_{i=1}^{\#beams} \left(1 - \frac{\mathrm{Pd}}{\mathrm{Md}}\right), \tag{14}$$

where C_{d} is the constraint function of displacement, Pd is the permissible deformation, and Md is the maximum deformation of the beams.

If the beam-column or column-column joint is not possible to be made in the engineering practice construction,

$$C_{\text{con}} = \sum_{i=!}^{\#\text{connections}} \left(\frac{\text{hd}}{\text{ld}}\right), \tag{15}$$

where C_{con} is the constraint function for the connection, hd is the higher dimension of section, and ld is the lower dimension of section (beam or column).

When the demand on the structural members is larger than the strength,

$$C_{\text{s}} = \sum_{i=1}^{\#\text{sections}} \left(1 - \frac{\text{Strength}}{\text{mf}}\right), \tag{16}$$

where C_{s} is the constraint function for the strength, mf is the maximum force acting in the section, and strength is the maximum allowable strength.

As observed in Equations (12)–(16), all the constraints are dimensionless; further, function F_1 is dimensionless since it is the ratio between MID and TD. On the contrary, the objective function F_2 has cubic root units of US dollars to avoid larger values of F_2 after they are penalized according to the constraints.

Note that through the generations, it is expected to obtain structural buildings that are not penalized, thus, they will have a value of one aimed at obtaining feasible designs.

5. Multiobjective Seismic Design Procedure Using NSGA-II

For the design of reinforced concrete frames (structural buildings), a computer program in the Visual Basic language was developed by the authors that uses the following procedure:

(1) *Initial Population.* The first generation is randomly created. Each individual corresponds to a set of sections of beam, column, and slab with its corresponding reinforcement area, where each one will be represented by binary code. A number n of individuals is proposed; in this case, it is 100.

(2) *Design Parameters.* Since the population is created, permanent, variable, and accidental actions are calculated for each individual. A structural analysis is carried out where displacements and strengths are reviewed by the regulation. In the MCBC regulation, the MID permissible is 0.012.

(3) *Objective Functions.* The aim of the objective function is to obtain a set of frames with better seismic performance-cost relation. For this, two functions are used: one that depends on the peak interstory drift and another related to the cost of the structure. Both functions should be penalized in case of not complying with some constraints or design criteria (chapter 4).

(4) *Selection.* The individuals are then separated into frontiers and crowding distances are calculated, where a total of n/2 individuals belonging to the main frontiers are selected. These frames will cross to obtain the remaining individuals of the new generation.

(5) *Crossing.* The selected individuals will cross each other, to designate the couples; the binary tournament is used, which consist by taking two random individuals and having them compete to define the parents. The crossing consists of combining the genetic information (binary code) of both parents into two children. When the pair of parents is obtained, a random number is generated between 1 and the number of bits with which they are working. Assuming 10 bits, individuals 407 and 725 are crossed as follows:

The following individuals are crossed from bit number 6:

$$\begin{array}{ll} 407 & 0\,1\,1\,0\,0\,1-0\,1\,1\,0 \\ 725 & 1\,0\,1\,1\,0\,1-0\,1\,0\,0 \end{array} \tag{17}$$

Generate two individuals with the following codes:

$$\begin{array}{ll} 405 & 0\,1\,1\,0\,0\,1\,0\,1\,0\,0 \\ 727 & 1\,0\,1\,1\,0\,1\,0\,1\,1\,0 \end{array} \tag{18}$$

(6) *Mutation.* It is used to guarantee the diversity of the structural RC frames obtained in each generation. It is applied for all generations and consists of the change of a specific bit of the code of an individual. A probability of mutation of 5% of the total individuals is proposed.

(7) *New Generation.* After all the evolutionary process, a new generation is obtained and the process returns to step 2 to begin a new generation to complete until it is finished with the n number of generations.

This procedure must be repeated several times in order to obtain the POS (best individuals). Figure 3 shows a flowchart of the multiobjective procedure using NSGA-II.

6. Multiobjective Seismic Design of the RC Buildings Using NSGA-II: Numerical Examples

In chapter 5, the multiobjective procedure for the seismic design using NSGA-II has been described. In this chapter, the methodology is used for the seismic design of 3D RC frames. Three RC 3D-framed buildings designated to offices of 3, 6, and 9 stories are earthquake-resistant designed considering a seismic behavior factor of 3. The first two structural models have 3 and 6 stories (RC-3 and RC-6), 3 bays in both horizontal directions with 7 m of length and a story height of 3.5 m for all the stories (Figures 4 and 5). The third building under consideration with a 3 m of story height and 3 bays of 5 m in both directions has 9 stories (model RC-9, Figure 6). For the structural design, it was proposed the use of one section of beam and column for every 3 stories and one slab for frame. For the application of

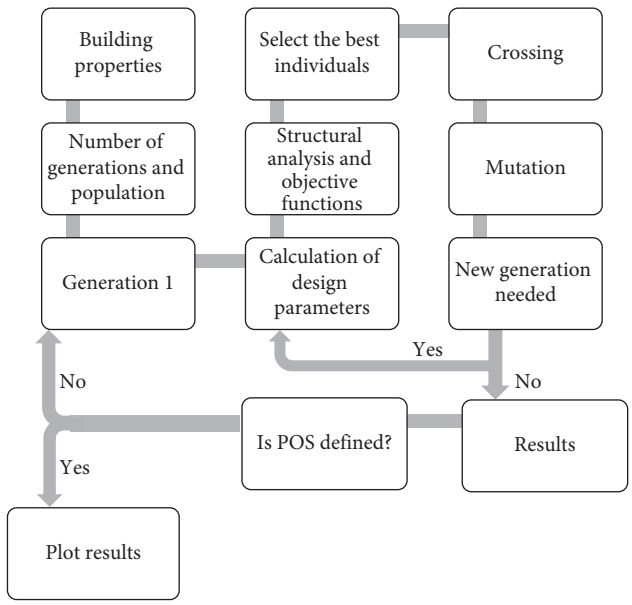

Figure 3: Flowchart used for the design of three-dimensional RC buildings.

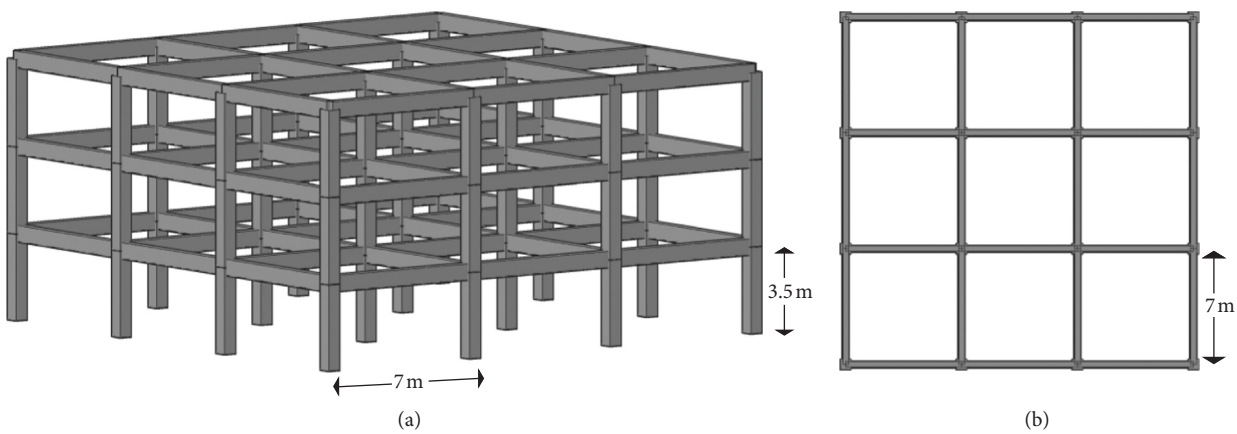

Figure 4: Model RC-3, with 3 objective sections. (a) Three-dimensional view. (b) Plan view.

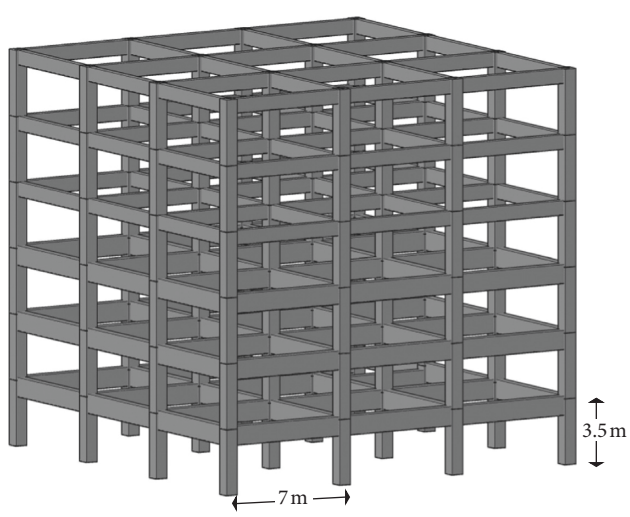

Figure 5: Model RC-6, with 5 objective sections.

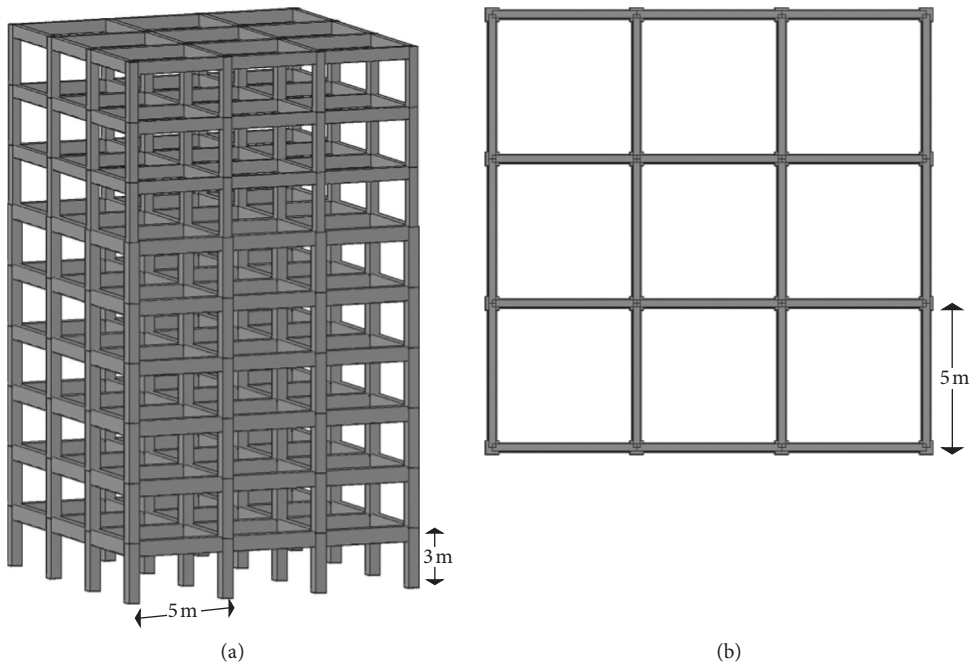

Figure 6: Model RC-9, with 7 objective sections. (a) Three-dimensional view. (b) Plan view.

the NSGA-II for the seismic design of all the structures, the next parameters or data have been considered:

(i) Individuals per generation: 100
(ii) Number of generations: 100
(iii) Probability of mutation: 5%
(iv) Fixed base columns
(v) Reinforcement concrete density: 2400 kg/m^3
(vi) Live load: 180 kg/m^2
(vii) Reduced moment of inertia in beams: 0.5 gross moment of inertia (I_g)
(viii) Reduced moment of inertia in columns: 0.7 I_g

6.1. Numerical Results for the Building RC-3. The numerical results for the reinforced concrete building with 3 stories are illustrated in this chapter. As it was previously described, this model has 3 bays in both horizontal directions with 7 m of length and a story height of 3.5 m for all the stories. For this example, beams, columns, and slabs have the same transversal section and steel reinforcement. For this reason, the binary codification of this model is represented by 30 bits, by means of the previous data and the NSGA-II procedure (Figure 3). In Figures 7 and 8, the behavior of the objective functions of the first execution of the program is shown. It is observed that the values of the objective functions decreased with the number of generations; in general, RC buildings more economical, lightweight and safety are obtained through the generations. It can be observed that before the generation number 10, no penalized individuals are observed. This is because only three variables (one beam, one column, and one slabs for all the stories) are used to represent this structural building; for the others models, a large number of generations will be required to obtain no penalized individuals, thus to minimize the objective functions (convergence). It is important to say that at the beginning of the procedure (first generation), the random approach provides some unrealistic combinations of transversal sections or solutions. Nevertheless, the first viable solution (without restrictions) randomly created in generation one compared with the solution at the end of the algorithm was improved considerably. In general, the objective functions are reduced as shown in Table 2. Notice that each solution is subjected to different S_{Fi} (seismic forces) that represent the earthquake, because of the differences between the dimensions of the sections (structural weight). Since the objective is to find solutions with maximum interstory drift close to the limit allowable of the MCBC, the optimal solution has a higher drift than the corresponding first solution obtained (Table 2).

The algorithm first found the most economical slab; this is because its influences is about 50% of the total cost of the frame and minimizes the seismic forces S_{Fi}. In general, S_{Fi} depends on the dimensions of beams and columns where different combinations modify the MID and stresses on each element. With the objective functions F_1 and F_2, these variations are evaluated reaching the combination of MID, stresses, S_{Fi}, and dimensions of the sections that achieve optimal results. Once the program concludes the procedure, several building designs are obtained for the Model RC-3.

In order to find the POS, the procedure of Figure 3 must be executed several times. A similar behavior of the objective functions through the generations was observed by applying the NSGA-II approach; however, the solutions obtained in each program execution provided different earthquake-resistant building designs. The best results are shown in Table 3 and Figure 9. In this model, the POS only resulted with 2 individuals. This is because the frames are composed

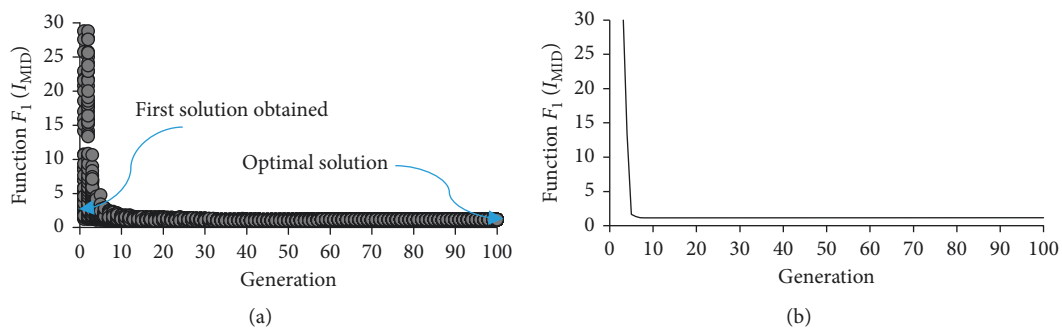

Figure 7: Behavior of objective function F_1 for model RC-3: (a) all individuals per generation; (b) average values of objective per generation.

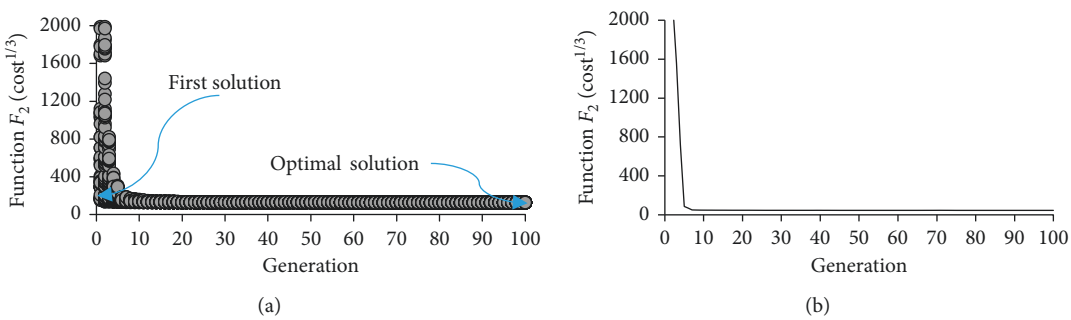

Figure 8: Behavior of objective function F_2 for model RC-3: (a) all individuals per generation; (b) average values of objective per generation.

Table 2: Differences between the first and best solution of first execution of the procedure for the RC-3 Model.

	First solution	Optimal solution	Reduction
F_1	2.059	1.015	1.044
F_2	51.056	47.949	3.107
MID	0.00582	0.01182	***0.006***
Cost (USD)	\$133,090.80	\$110,239.86	\$22,850.94
Column (cm)	70 × 70	55 × 55	15 × 15
Beam (cm)	50 × 75	35 × 65	15 × 10
Slab (cm)	18	18	0

Table 3: Best individuals for model RC-3.

Individual	F_1	F_2	MID	Cost
1	1.015	47.949	0.01182	\$110,245.31
2	1.001	48.794	0.01198	\$116,175.62
3	1.098	48.032	0.01092	\$110,812.14
4	1.072	48.228	0.01119	\$112,180.45
5	1.056	48.408	0.01136	\$113,439.22
6	1.008	49.138	0.0119	\$118,648.60

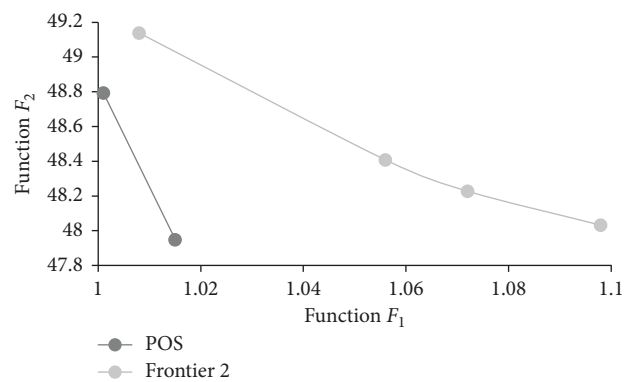

Figure 9: Objective functions F_1 and F_2 for the best individuals of model RC-3.

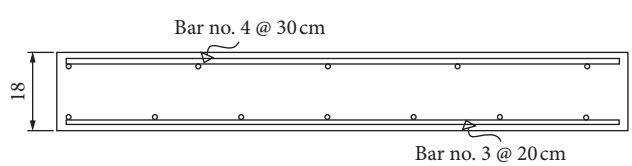

Figure 10: Slab section selected from the POS individuals, model RC-3.

only by 3 different sections and there are few optimal combinations. The cost in US dollars of the structural buildings is illustrated in Table 3.

The reinforcement areas and dimensions of the sections obtained from the best individuals are very similar, up to a maximum of 10 cm in beams. As the slab contributes 50% of the total cost, the section turned out to be the same in the best 2 individuals (Figure 10). The transversal sections for beams and columns of the most economical individual are shown in Figure 11.

6.2. Numerical Results for the Building RC-6. In the case of buildings with 6 stories, 5 different transversal sections are selected for the members: two different transversal sections for beams and columns—one for the stories 1 to 3 and another one for the stories 4 to 6. In all the stories, the same section of slab is used. For this model, the binary codification is represented by 50 bits. As shown in Equations (7) and (9),

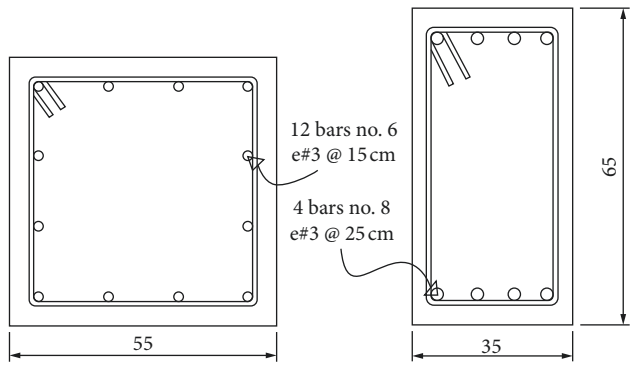

Figure 11: Optimal beam and column sections from individual 1, model RC-3.

the objective function F_1 has the purpose of finding solutions with the maximum interstory drift close to the limit allowable established by the Mexican regulation. In Figure 12, it is observed that the average maximum interstory drift of the individuals of the RC-6 model increases through the generations and tends to the maximum permissible interstory drift of the Mexican Building Code (0.012). This means that the dimensions of the transversal sections decrease as the generation increases, as well as the cost. In other words, the RC building tends to use its maximum deformation capacity.

The behavior of the algorithm was similar to the previous model, decreasing the value of the objective functions with the generations. A large number of individuals at the POS are expected due to the possible combinations of solutions. Table 4 shows the best results after executing the program several times.

MID values in the best individuals range from 0.011 to 0.012, proving that the results are at the limit allowable peak displacement, and the costs are very close to each other with a difference of US$ 4,300. Moreover, since the bays have the same dimensions as the previous model, the same slab was obtained. POS are defined by 3 individuals very similar to each other (Figure 13). In Figures 14 and 15, the sections of the beams and columns are shown.

6.3. Numerical Results for the Building RC-9. For this RC building, a total of 7 objectives are used (3 columns, 3 beams, and 1 slab), and the binary codification of each individual is represented by 70 bits, so it is expected that there will be a wide range of results and it will be very difficult for all the frames to result with same similar transversal sections. In addition, convergence of the objectives functions is expected in a larger number of generations. Table 5 illustrates the best seismic design results. It is observed that the MID and cost are very similar for all the cases obtained.

The POS are defined by 5 individuals with very similar objective cost function and MID close to the target 0.012 (Figure 16 and Table 5). In this model, the MID varies from 0.0117 to 0.012, and the maximum cost difference between the best individuals is just US$ 4,265.

In Figures 17–20, the transversal sections of the economical individual are shown. As it is expected, the

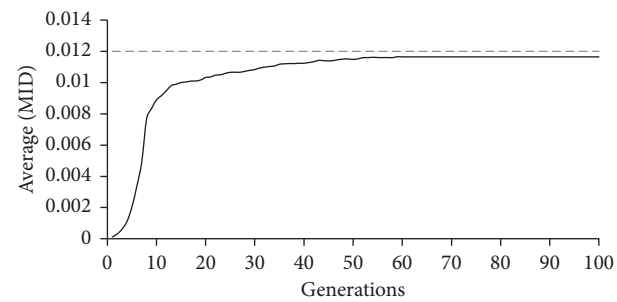

Figure 12: Average interstory drift of individuals per generation.

Table 4: Best individuals for model RC-6.

Individual	F_1	F_2	MID	Cost
1	1.087	64.945	0.0110396	$273,933.05
2	1.049	65.177	0.0114395	$276,884.01
3	1.001	65.286	0.011988	$278,272.25
4	1.049	65.27	0.0114395	$278,062.50
5	1.015	65.654	0.0118227	$283,002.30
6	1.001	65.879	0.011988	$285,918.55

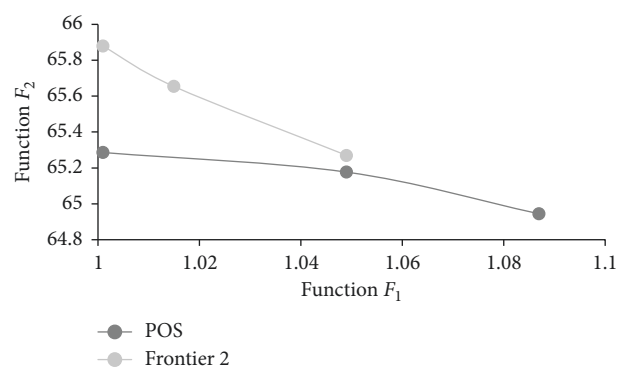

Figure 13: Objective functions F_1 and F_2 for the best individuals of model RC-6.

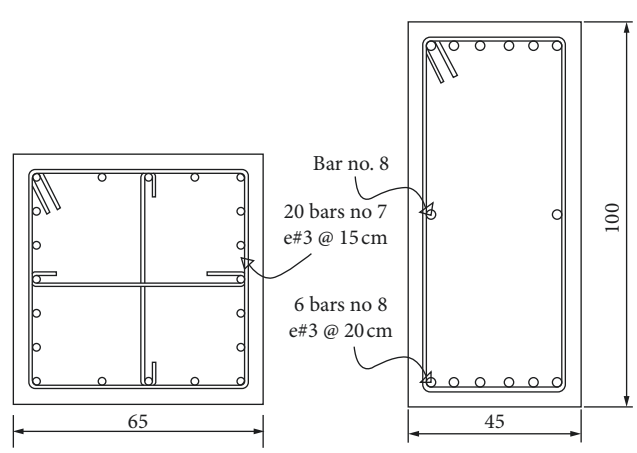

Figure 14: Optimal beam and column sections for levels 1–3 of individual 1, model RC-6.

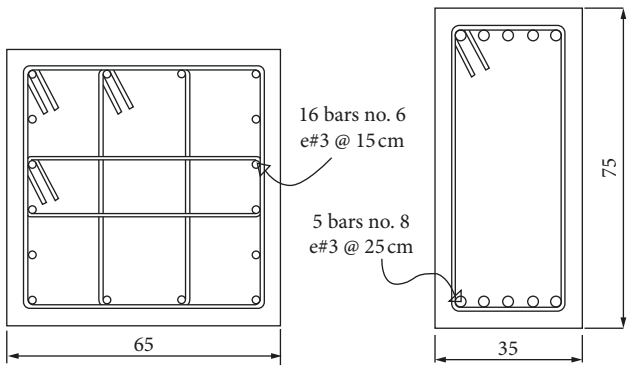

Figure 15: Optimal beam and column sections for levels 4–6 of individual 1, model RC-6.

Table 5: Best individuals for model RC-9.

Individual	F_1	F_2	MID	Cost
1	1.025	57.441	0.0117073	$189,524.74
2	1.023	57.442	0.0117302	$189,539.85
3	1.009	57.48	0.011893	$189,917.82
4	1.006	57.595	0.0119284	$191,058.53
5	1.001	57.869	0.011988	$193,790.31
6	1.009	57.678	0.011893	$191,872.30
7	1.006	58.616	0.0119284	$201,397.38

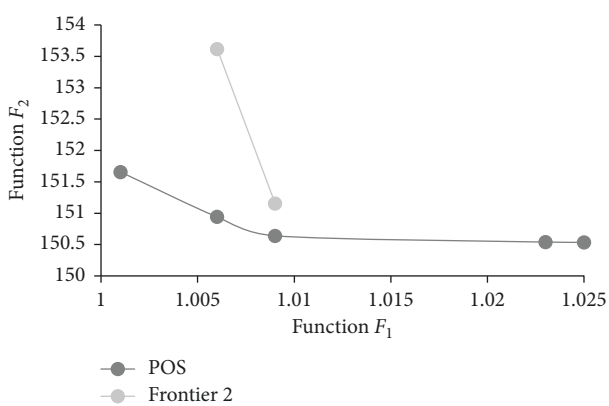

Figure 16: Objective functions F_1 and F_2 for the best individuals of model RC-9.

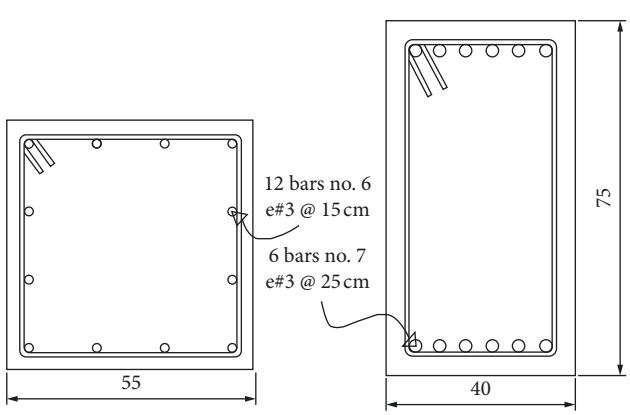

Figure 17: Optimal beam and column sections for levels 1–3 of individual 1, model RC-9.

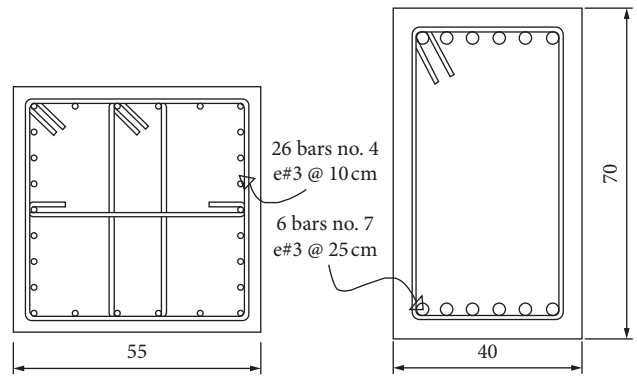

Figure 18: Optimal beam and column sections for levels 4–6 of individual 1, model RC-9.

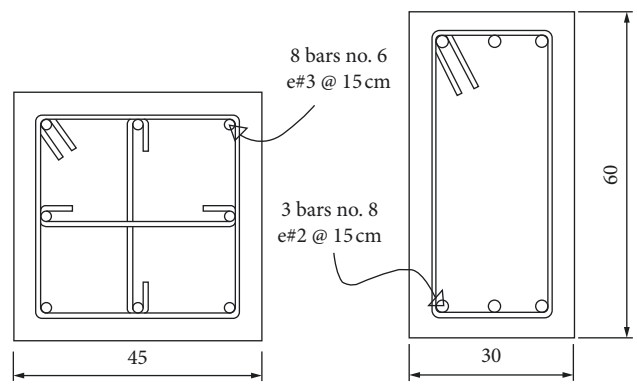

Figure 19: Optimal beam and column sections for levels 7–9 of individual 1, model RC-9.

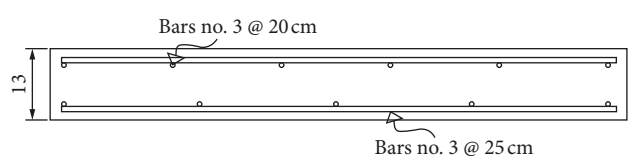

Figure 20: Optimal slab section selected from individual 1, model RC-9.

dimensions and reinforcement areas of beams and columns decrease at the top stories. Although the results were satisfactory, to better define POS, it is recommended to use a larger number of individuals and generations to consider more combinations and to find different but not dominated results.

7. Conclusions

Three reinforced concrete buildings under earthquake loads have been designed using genetic algorithms with the aim to reduce the structural cost and to increase the seismic performance. For this objective, a computer program was developed. The application of a genetic algorithm with multiobjective optimization using the NSGA-II approach is an excellent option for the seismic design of the reinforced concrete buildings. It was observed that through the

generations, the designed buildings tend to reduce their cost and increase the maximum interstory drift. The MID function (F_1) helped to obtain less robust sections and peak drifts close to the upper limit capacity equal to 0.012. On the contrary, the cost function (F_2) found the most economical results. Finally, the study provides complete designed RC buildings which also can be used directly for practitioner of the structural and civil engineering. Finally, the time required for the structural optimization in a computer depends mainly on the number of elements of the building, individuals and number of generations. For example, because the RC-9 model has a large number of elements, it requires more computational time. Indeed, to define its POS, the algorithm was executed 10 times, with a computer of 16 GB of RAM and processor Intel Core I7-6700, and the results were reached after 216 hours.

Data Availability

The data used to support the findings of this study are available from the corresponding author upon request.

Conflicts of Interest

The authors declare no conflicts of interest.

Acknowledgments

The scholarship for PhD studies given by El Consejo Nacional de Ciencia y Tecnología to the first author and the support under grant Ciencia Básica to the second and third authors are appreciated. Financial support also was received from the Universidad Autónoma de Sinaloa under grant PROFAPI.

References

[1] J. Holland, *Adaptation in Natural and Artificial Systems. An Introductory Analysis with Applications to Biology, Control, and Artificial Intelligence*, University of Michigan Press, Ann Arbor, MI, USA, 1975.

[2] D. Coley, *An Introduction to Genetic Algorithms for Scientists and Engineers*, World Scientific Publishing Co. Pte. Ltd, Singapore, 1999.

[3] K. Deb, A. Pratap, S. Agarwal, and T. Meyarivan, "A fast and elitist multiobjective genetic algorithm: NSGA-II," *IEEE Transactions on Evolutionary Computation*, vol. 6, no. 2, pp. 182–197, 2002.

[4] E. Bojórquez, A. Reyes-Salazar, S. Ruiz, and J. Bojórquez, "A new spectral shape-based record selection approach using Np and Genetic Algorithms," *Mathematical Problems in Engineering*, vol. 2013, Article ID 679026, 9 pages, 2013.

[5] K. Deb and S. Gulati, "Design of truss-structures for minimum weight using genetic algorithms," *Finite Elements Analysis and Design*, vol. 37, no. 5, pp. 447–465, 2001.

[6] T. Dede, S. Bekiroglu, and Y. Ayvaz, "Weight minimization of trusses with genetic algorithm," *Applied Soft Computing*, vol. 11, no. 2, pp. 2565–2575, 2011.

[7] M. Prendes-Gero and J. Drouet, "Micro-scale truss optimization using genetic algorithm," *Structural and Multidisciplinary Optimization*, vol. 43, no. 5, pp. 647–656, 2011.

[8] D. Šešok and R. Belevičius, "Global optimization of trusses with a modified genetic algorithm," *Journal of Civil Engineering and Management*, vol. 14, no. 3, pp. 147–154, 2008.

[9] E. Salajegheh and S. Gholizadeh, "Optimum design of structures by an improved genetic algorithm using neural networks," *Advances in Engineering Software*, vol. 36, no. 11-12, pp. 757–767, 2005.

[10] C. Camp, S. Pezeshk, and C. Guozhong, "Optimized design of two-dimensional structures using a genetic algorithm," *Journal of Structural Engineering*, vol. 124, no. 5, pp. 551–559, 1998.

[11] F. Erbatur, O. OTütüncü, and H. Kilic, "Optimal design of planar and space structures with genetic algorithm," *Computers and Structure*, vol. 75, no. 2, pp. 209–224, 2000.

[12] S. Pezeshk, C. Camp, and D. Chen, "Design of nonlinear framed structures using genetic optimization," *Journal of Structural Engineering*, vol. 126, no. 3, pp. 387-388, 2000.

[13] M. Prendes-Gero, A. García, and J. del Coz, "Design optimization of 3D Steel structures: genetic algorithms vs. classical techniques," *Journal of Constructional Steel Research*, vol. 62, no. 12, pp. 1303–1309, 2006.

[14] P. Kripakaran, B. Hall, and A. Gupta, "A genetic algorithm for design of moment-resisting steel frames," *Structural and Multidisciplinary Optimization*, vol. 44, no. 4, pp. 559–574, 2011.

[15] M. Leps and M. Sejnoha, "New approach to optimization of reinforced concrete beams," *Computers and Structures*, vol. 81, no. 18-19, pp. 1957–1966, 2003.

[16] V. Govindaraj and J. Ramasamy, "Optimum detailed design of reinforced concrete continuous beams using genetic algorithms," *Computer and Structures*, vol. 84, no. #, pp. 34–48, 2005.

[17] G. Ćirović, V. Radonjanin, M. Trivunić, and D. Nikolić, "Optimization of UHPFRC beams subjected to bending using genetic algorithms," *Journal of Civil Engineering and Management*, vol. 20, no. 4, pp. 527–536, 2014.

[18] C. Lee and J. Ahn, "Flexural design of reinforced concrete frames by genetic algorithm," *Journal of Structural Engineering*, vol. 129, no. 6, pp. 762–774, 2003.

[19] A. Senouci and M. Al-Ansari, "Cost optimization of composite beams using genetic algorithms," *Advances in Engineering Software*, vol. 40, no. 11, pp. 1112–1118, 2009.

[20] G. Papavasileiou and D. Charmpis, "Seismic design optimization of multi-storey steel-concrete composite buildings," *Computers and Structures*, vol. 170, pp. 49–61, 2016.

[21] O. Kelesoglu, "Fuzzy multiobjetive optimizaction of truss-structures using genetic algorithm," *Advances in Engineering Software*, vol. 38, no. 10, pp. 717–727, 2007.

[22] M. Barraza, "Multi-objective optimization of structural steel buildings under earthquake loads using NSGA-II and PSO," *KSCE Journal of Civil Engineering*, vol. 21, no. 2, pp. 488–500, 2017.

[23] M. Babaei and M. Mollayi, "Multi-objective optimization of reinforced concrete frames using NSGA-II algorithm," *Engineering Structures and Technologies*, vol. 8, no. 4, pp. 157–164, 2016.

[24] X. Zou, C. Chan, G. Li, and Q. Wang, "Multiobjective optimization for performance-based design of reinforced concrete frame," *Journal of Structural Engineering*, vol. 133, no. 10, pp. 1462–1474, 2007.

[25] Y. Túpac, "Algoritmos evolutivos en optimización multiobjetivos (MOEA)," in *Proceedings of XII Congreso Internacional de Informática y Sistemas*, Tanca, Perú, November 2011.

[26] M. Ferraioli, A. LAvino, and A. Mandara, "Behaviour factor of code-designed steel moment-resisting frames," *International Journal of Steel Structures*, vol. 14, no. 2, pp. 243–254, 2014.