Hindawi
Advances in Civil Engineering
Volume 2020, Article ID 8847219, 12 pages
https://doi.org/10.1155/2020/8847219

Research Article

The Aerodynamic Characteristics of Road Vehicles Overtaking on Bridge Deck under Crosswinds

Ning Chen,[1,2] **Hongxin Sun**,[1,2] **Xiuyong Wang**,[1] **and Longwei Zhang**[1]

[1]*School of Civil Engineering, Hunan University of Science and Technology, Xiangtan, Hunan 411201, China*
[2]*Hunan Provincial Key Laboratory of Structures for Wind Resistance and Vibration Control, Hunan University of Science and Technology, Xiangtan, Hunan 411201, China*

Correspondence should be addressed to Ning Chen; xningchen@hnust.edu.cn and Hongxin Sun; cehxsun@hnust.edu.cn

Received 5 March 2020; Revised 8 July 2020; Accepted 18 July 2020; Published 3 August 2020

Academic Editor: Valeria Vignali

The aerodynamic characteristics of road vehicles in windy environments are the prerequisites for the evaluation and prediction of the driving safety and stability. To investigate the aerodynamic characteristics of the overtaking vehicles on the bridge deck under the effects of crosswinds, models of a cable-stayed bridge with a typical flat box girder and road vehicles involving articulated lorry and commercial van with a scale of 1 : 40 were tested in the wind tunnel laboratory. A series of tests figured out the variation of the aerodynamic forces of road vehicles during the overtaking process after considering the aerodynamic interference between lorry and lorry, van and van, and lorry and van. Additionally, the influence of the lateral overtaking distance between the overtaking vehicles was regarded as well. The result reveals the upstream vehicle has a significant influence on the aerodynamic coefficients of the downstream vehicle, which have experienced dramatic fluctuations during the overtaking process, and the various shapes of the aerodynamic coefficients are highly dependent on it.

1. Introduction

The wind-induced traffic accidents of road vehicles are a common occurrence, frequently reported around the world [1–4]. A postdisaster investigation indicates that the flow pressure and the aerodynamic loads acting on vehicles are the main cause of wind-induced traffic accidents. In addition, the aerodynamics characteristic of road vehicles involves not only the aerodynamic shape but also the natural wind and different infrastructure scenarios such as flat grounds [5, 6], embankments [7], bridges [4, 8], and wind barriers [9–11], which presents the features of complexity and uncertainty. More importantly, when a vehicle is travelling along a road or across a bridge at a high speed under crosswind, the vehicle in the adjacent lane overtakes, and the aerodynamic parameters of side force, lift force, and rolling moment for the two vehicles will change significantly under the overtaking process, which is extremely easy to arouse course derivations and even rollover accidents. In order to accurately evaluate the accident risk and the driving safety of road vehicle, the sudden change characteristics of the road vehicles under specific situation become necessary and essential.

The work of Coleman and Baker [12, 13] reveals that the aerodynamic characteristics of high-sided road vehicles under grounds in windy environments are strongly affected by the turbulence intensity, which changes the vortices around the surface of the vehicles. Considering the aerodynamic interaction between the vehicle and bridge, the variation of the flow fields around the vehicle could be more complex than that of grounds. Many researches [4, 14, 15] have been carried out and the results show that the existence of the vehicles has changed the flow field of the vehicle-bridge system, naturally, and the aerodynamic coefficients of road vehicles significantly depended on the ambient flow of the bridge deck. However, in the above researches, the stationary vehicle neglects the relative motion between the vehicle and the bridge, and it cannot truly reflect the real situation of the moving vehicle.

In recent years, research on the aerodynamic characteristics of a moving vehicle has become a hot topic. Bocciolone et al. [16] conducted a series of wind tunnel tests to

investigate aerodynamic characteristics of three types of rail vehicles in different configurations using a U-shaped moving vehicle device. To improve the control of the moving vehicles, a guideway based moving vehicle system has been developed by Li et al. [17], which could greatly improve the accuracy of the moving vehicle and bridge. As far as high-speed trains, Li et al. [18] observed a sudden decrease of the aerodynamic force of a moving train entering into the truss bridge due to the shielding effects of the truss structure. Deng et al. [19] investigated the case of a high-speed train driving into a bridge from a tunnel (OUT) or from a bridge into a tunnel, which revealed the difference in the aerodynamic performance of high-speed trains in the two processes in terms of transient aerodynamic loads and flow field. Nevertheless, the above studies only explored the effect of crosswinds on the transient aerodynamic characteristics of a single vehicle and were rarely concerned with the complex driving conditions of overtaking and passing under crosswind. Noger et al. [20, 21] carried out a series of wind tunnel tests to clarify the aerodynamic interaction of the car-to-car and light truck to heavy truck; yet, the research is not aimed at the effects of crosswind, and the relative velocity of the moving vehicle is against the wind direction. To further investigate the effects of crosswind on the overtaking process, Liu et al. [22] used numerical simulation to investigate the overtaking process of trucks driving on the flat grounds; it was shown that the aerodynamic forces on the two trucks were significantly affected by the crosswind.

The moving model experiment is an ideal method to explore the overtaking manoeuvres under crosswind as it could reflect the realistic motion of the vehicle, but there are many difficulties in the practice. On one hand, due to the limited dimensions of wind tunnels, the moving distance is limited and the valid measuring time is very short. On the other hand, some uncertainty factors such as the smoothness of the guideway (or the ruggedness of the connection components) may disturb the evaluation of the aerodynamic force of the moving vehicle. More recent studies [23, 24] demonstrated that, in terms of the overall mean aerodynamic force, the still experiments were sufficient. Additionally, the technical standards about crosswind effects on rolling stock (CEN standard EN 14067-6: 2010) recommended the still model test rather than the moving model test because of its greater robustness and reliability [25].

The aim of the present work is to investigate the aerodynamic characteristics of road vehicles during the overtaking process under the influence of crosswinds. A scale cable-stayed bridge with a flat box girder has been introduced into the experiments as the infrastructures for the driving environments. The scale of the model (both for the vehicle and bridge) selects 1 : 40 for the present wind tunnel experiments. It investigates the variation characteristics of the aerodynamic force considering various configurations of the articulated lorry and the commercial van during the overtaking process.

2. Wind Tunnel Experiments

In this part, a series of experiments are carried out to investigate the aerodynamic characteristics of two types of high-sided road vehicles overtaking on bridge deck under crosswinds. The experiments are undertaken in the Wind Tunnel of Hunan University of Science and Technology (HNUSTWT), which is a part of the Hunan Provincial Key Laboratory of Structures for Wind Resistance and Vibration Control. The HNUSTWT is a blow-down wind tunnel and is composed of a rectangle boundary layer test section that is 21 m long, 4 m wide, and 3 m high. The wind speed can be adjusted from 0 m/s to 30.0 m/s. The flow field performance is great, the corresponding velocity inhomogeneity and turbulence intensity are less than 1%, and the average airflow deflection angle is less than 1°.

2.1. Vehicle and Bridge Deck Geometries. High-sided road vehicles are vulnerable to crosswind due to their relatively larger side areas. The commercial van and articulated lorry as the typical representatives of high-sided road vehicles are adopted in this study. The geometric scales of the two vehicles are set as 1 : 40 after a comprehensive consideration of many factors, which includes the size of the bridge deck and the working size of the wind tunnel and the sensitivity and capacity of the force balance. The configuration of the vehicles at full scale is illustrated in Figure 1. To lighten the weight and keep the proper aerodynamic configuration, the vehicle models are made of wood plates with a hollow vehicle body for the installation of the force balance. The masses of the articulated lorry and commercial van are 650 g and 450 g, respectively.

The prototype of the bridge is a highway cable-stayed bridge, with a main span of 316 m, located in Chongqing of China. The bridge deck is of the flat box girder. The dimension of a typical deck section is 27.4 m wide and 3.0 m high carrying a dual three-lane carriageway as shown in Figure 2. The six lanes are identified as lanes 1 to 6 (from the windward side to the leeward side). The same geometric scale (1 : 40) is adopted for the bridge deck model. And then, the bridge section model with a width of 0.685 m and a length of 2.4 m is designed. In addition, the affiliated structures of the bridge deck have a significant influence on the aerodynamic characteristics of road vehicles, so it is of great importance to take the safety fence and the isolating railing into consideration in the model making. In this regard, a pair of safety fence and a pair of the isolating railing are utilized to enhance the aerodynamic performance of the bridge deck.

2.2. Experimental Setup. The bridge deck model is mounted on the steel support located in the center of the wind tunnel at 1.7 m above the tunnel floor (see Figure 3). The steel support is composed of four great pipe columns and two rectangular aluminum beams which can provide enough stiffness in the horizontal and vertical directions to firmly fix the bridge deck. By this way, the measurement accuracy of aerodynamic force on the vehicle models could be ensured. For the convenience of the movement of the testing vehicle on bridge deck, three slideways are introduced into the bridge model, which are embedded into the bridge deck along the centerline of the windward traffic lanes. The testing

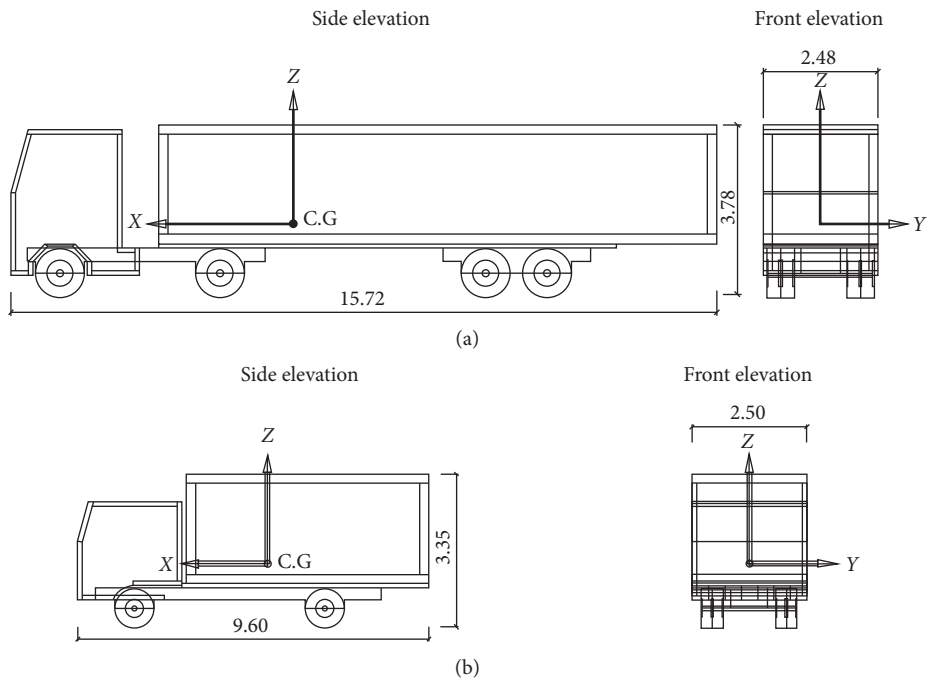

Figure 1: Vehicle models at full scale (unit: m). (a) Articulated lorry. (b) Commercial van [9].

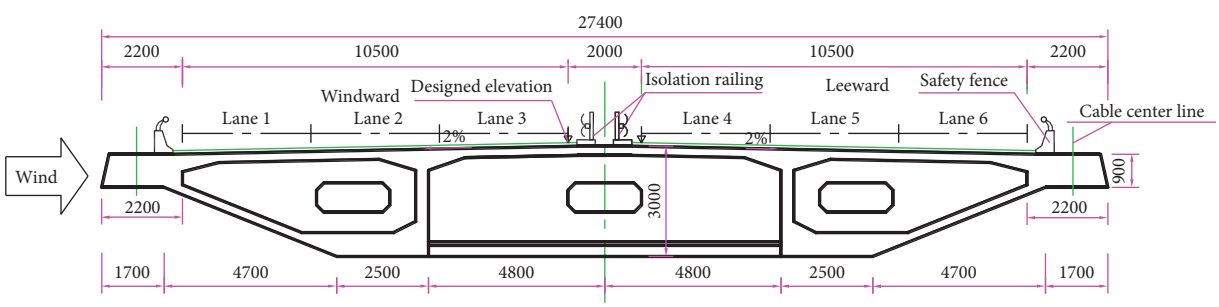

Figure 2: Configuration of the bridge deck at full scale (unit: mm).

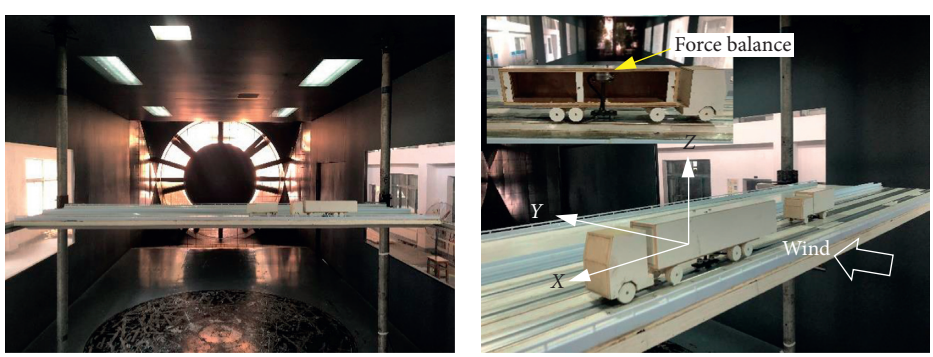

(a) (b)

Figure 3: The vehicles and bridge in the wind tunnel.

vehicle is mounted on the bridge deck through a specially designed I shaped connector playing as a flange which is made of steel bar providing sufficient stiffness to sustain the weight of the vehicle body and the aerodynamic force. One end of connector is installed to one end of the force balance. The perceiving end of the balance is linked to the top of the vehicle body (see Figure 3), while the other end of the connector is inserted into the notch of the slideway via a

slider. To minimize the effects of the force balance on the aerodynamic force, the whole balance is installed inside the vehicle body. It is worth noting that 1~2 mm gap is left between the vehicle wheels and the surface of the bridge deck to prevent vehicle wheels from contacting the deck surface during the tests.

Aerodynamic force measurement is the focus of the current experiments. The six-axis force/torque sensing system ATI mini40 is adopted to measure the force on the lorry and van. The design loads corresponding to side force, lift force, and moments are 40 N, 120 N, and 2 N·m, respectively, for the balance. To obtain a greater Reynolds number, the free-stream wind speed of the wind tunnel is set as 16 m/s. As the constraint of the experimental conditions, the Reynolds numbers of the scaled road vehicle based on the vehicle height are 1.03×10^5 and 0.95×10^5 for the articulated lorry and commercial van, respectively. It is acknowledged that the Reynolds numbers are lower than the corresponding full-scale values. However, previous research has shown that such modeling can achieve appropriate results. For the current work, the time history of 120 s is recorded at a sampling frequency of 300 Hz, which is high enough to record the fluctuating signal of aerodynamic force.

2.3. Tested Configurations and Date Processing. In order to investigate the aerodynamic characteristics of the adjacent vehicles during the whole course of the vehicle overtaking, eight cases are examined in the current work. The effects of the two main factors, including the combinations of vehicle type and the relative lateral lane position, on the aerodynamic characteristics of the overtaking vehicles are investigated in the presented experiments. The experiment configurations are listed in Table 1. Due to only introducing the articulated lorry and commercial van into the experiment, there are three combinations of the vehicle types, that is, lorry and lorry, van and van, lorry and van. Considering the effects of lateral spacing, two overtaking situations are studied, namely, the vehicle passing the adjacent lanes of lane 1 and lane 2 and the interval lanes of lane 1 and lane 3. Ignoring the influence of the vehicle motion, the overtaking process could be regarded as a static shifting procedure of the vehicles relative position along the traffic lanes. Though it is unable to reflect the really aerodynamic characteristics of the driving vehicle, it can present the changing law of the aerodynamic characteristics for the adjacent overtaking vehicles to some extent. In each case, the moving vehicle shifts $0.2L$ (L is the length of the fixed vehicle) each time from $-1.5L$ to $1.5L$ location, and the fixed vehicle is always located at the center of the bridge deck (see Figure 4). A complete test process could reflect the whole process of the adjacent vehicles from first approach to complete departure. The force balance is installed in the moving vehicle and a total of 15 test locations are considered along the traffic lane. Therefore, the transient aerodynamic forces of the moving vehicle are located at each test location are available, while it is unable to obtain the aerodynamic force of the fixed vehicle at the same time. By exchanging the relative position of the moving and fixed vehicles, it is possible to obtain the aerodynamic forces as the overtaking vehicle passes over different lanes, as shown in Table 1. The reference system of the aerodynamic forces (as shown in Figures 1 and 3) is adopted in the current work, which is the same for all the vehicles and is centered at the gravity center of the vehicle body. The side and lift forces are acting in the positive direction of the y and z axes, respectively, and the rolling moment, the pitching moment, and the yawing moment are acting about the x, y, and z axes, respectively. In general, it is reasonable to describe the aerodynamic forces of vehicle by the dimensionless quantities, and the aerodynamic coefficients of the vehicles can be defined as

Table 1: Description of the test cases.

Vehicle arrangement	Vehicle type and lateral position: The moving vehicle	Vehicle type and lateral position: The fixed vehicle	Case number
Lorry and lorry	Lane 1 (or lane 2)	Lane 2 (or lane 1)	1
	Lane 1 (or lane 3)	Lane 3 (or lane 1)	2
Van and van	Lane 1 (or lane 2)	Lane 2 (or lane 1)	3
	Lane 1 (or lane 3)	Lane 3 (or lane 1)	4
Lorry and van	Lorry, lane 1 (or lane 2)	Van, lane 2 (or lane 1)	5
	Lorry, lane 1 (or lane 3)	Van, lane 3 (or lane 1)	6
	Van, lane 1 (or lane 2)	Lorry, lane 2 (or lane 1)	7
	Van, lane 1 (or lane 3)	Lorry, lane 3 (or lane 1)	8

(1) The moving vehicle is the test vehicle, changing position along the traffic lane. (2) The fixed vehicle is always located at $X = 0$ position corresponding to the center of the traffic lane.

$$C_i = \frac{F_i}{0.5\rho U^2 A_s}, \quad (i = y, z), \tag{1}$$

$$C_{\mathrm{Mi}} = \frac{M_i}{0.5\rho U^2 A_s h_v}, \quad (i = x, y, z), \tag{2}$$

where F_i and M_i represent the instantaneous aerodynamic force and moment acting on the vehicle axis system, respectively, the corresponding aerodynamic force and moment coefficients C_i and C_{Mi} can be obtained with (1)~(2), ρ is air density ($\rho = 1.225\ \mathrm{kg/m^3}$), A_s is the vehicle side projection area, and h_v denotes the height of the vehicle gravity center from the ground. According to the time history of aerodynamic coefficients, the mean coefficients can be obtained by the time-averaged values over the entire duration of the recorded time histories, whereas the peak coefficients are defined as the peak values averaged over a full-scale gust time of 3 s.

3. Results and Discussion

3.1. Interaction of the Articulated Lorry. The mean aerodynamic coefficients of the moving articulated lorry are plotted for each location of the traffic lanes (see Figure 5). It is noted that the aerodynamic coefficients include side force

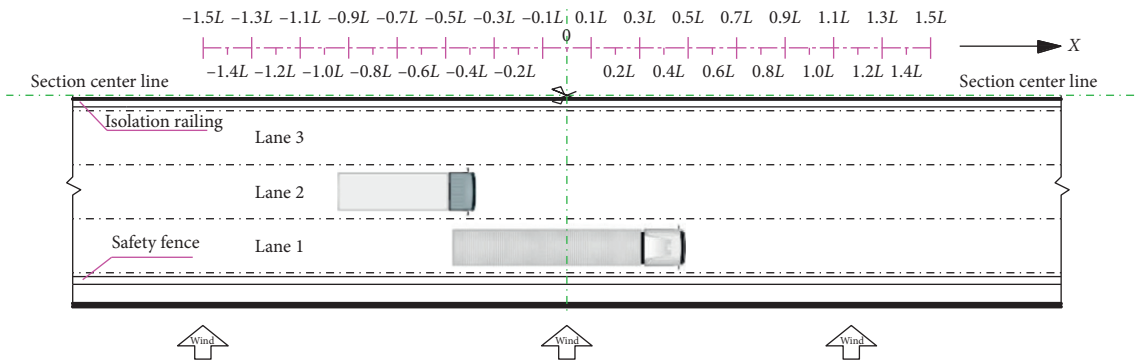

Figure 4: The overtaking vehicles and the test locations.

coefficients, lift force coefficients, rolling moment coefficients, pitching moment coefficients, and yaw moment coefficients. Four different sets of data are depicted in the figure, and each curve represents the aerodynamic coefficients of the moving vehicle overtaking the fixed vehicle along traffic lanes. Overall, the aerodynamic coefficients are close to each other as the vehicle overtakes in the upstream first lane regardless of the lanes where the fixed vehicle is located, which is especially for the coefficients of side force, rolling moment, and yaw moment, and the corresponding aerodynamic coefficients are always standing around 1.1, 0.4, and 1.05, respectively. It indicates that the downstream vehicles have limited influence on the aerodynamic coefficients of the upstream vehicle in terms of the articulated lorry.

However, the mean side force (Figure 5(a)) and rolling moment (Figure 5(c)) coefficients follow a similar trend to vehicles overtaking in the downstream second and third lanes. With the changes of windshield area during overtaking, the aerodynamic coefficients experienced a dramatical decline and then increased rapidly which can be contributed to the sheltering effects of the upstream vehicle. As the windshield area reaches the maximum, that is, vehicles being side by side under crosswinds, the minimum values for the side force and rolling moment coefficients are obtained. Comparatively speaking, the variation of aerodynamic force is more intense, as the vehicle in the second lane overtakes, which exhibits a typical V-shaped curve with the minimum values of −0.06 and −0.05 at the lowest point for the side force and rolling moment coefficients, respectively, whereas a U-shaped curve is presented in the third lane with a sheltering range up to a vehicle length at the bottom of the curve. The discrepancy can be contributed to the flow field distribution around the adjacent overtaking vehicles which is closely related to the vehicle geometry and the relative location of vehicles. Since the incoming flow is blocked by the upstream vehicle, the flow field separates from the edge of the vehicle body and flows downstream, which forms a wider influence area within the downstream lanes.

The variation of mean lift force coefficients is illustrated in Figure 5(b). It shows minor fluctuations vary with the vehicle locations and overtaking lanes, within the range from −0.13 to 0.19. The change pattern of the pitching moment coefficient (Figure 5(d)) presents obvious fluctuating trends in terms of Case 1. It reaches the maximum as overtaking vehicles are side by side, and then rapidly decreases to a minimal negative value as the vehicle is about to separate. This phenomenon may be caused by the aerodynamic interference. The vehicle on the leeward third lane is subjected to the increased wake intensity, which in turn affects the aerodynamic force of the windward vehicle. It leads to a sharp change of the aerodynamic coefficient for both of the adjacent vehicles.

However, in Case 2, it is noted that the pitching moment coefficient does not change much during the entire overtaking process. The change of the yaw moment coefficients is similar to the lying S-shaped curve, which increases to peak first and then decreases to minimum around −0.8 as vehicles enter the overtaking area. When the vehicle begins to leave, the yaw moment coefficients gradually increase again. The reason may be that only the head or rear part of the vehicle is exposed to the wind pressure due to the sheltering effects of the upstream vehicle, which induces an unbalanced moment increasing with the entering or departure of the overtaking vehicle.

As mentioned in Section 2, the peak coefficients are calculated as the peak values averaged over a full-scale gust time of 3 s. The variation of the peak coefficients with the overtaking process is presented in Figure 6. As expected, the magnitudes (in absolute value) of the peak aerodynamic coefficients are significantly greater than that of the mean values and they are almost two or three times the mean coefficients. The peak coefficients curves represent the same trend with the location of the moving vehicle, whereas it reveals great disparity comparing the mean coefficients curves of side force, lift force,, and rolling moment (Figures 5(a)–5(c)) for different cases in lane 1. It indicates that the downstream vehicle could have certain effects on the upstream vehicle, but it is unapparent in the mean aerodynamic coefficient curves. Besides, the variation of the downstream coefficients (in lanes 2 and 3) is more intense, exhibiting an obvious V-shaped curve (Figures 6(a) and 6(c)). It decreases rapidly and then increases sharply with the intersection of the vehicles.

3.2. Interaction of the Commercial Van. In view of the driving safety of road vehicles, it is reasonable to focus attention on the aerodynamic components of side force, lift force, and rolling moment. Figure 7 illustrates the trend of the mean

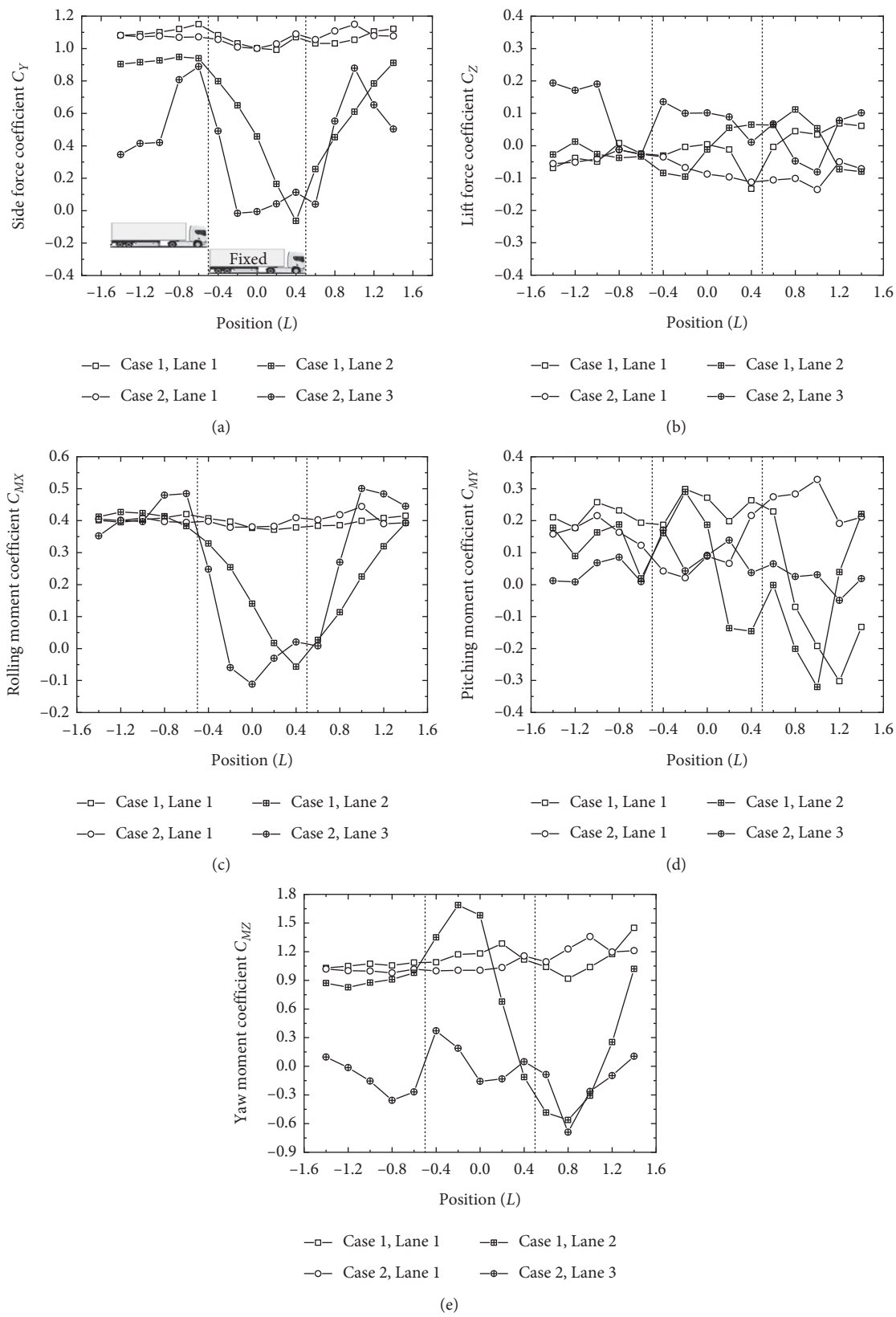

Figure 5: Mean aerodynamic coefficient of the lorry.

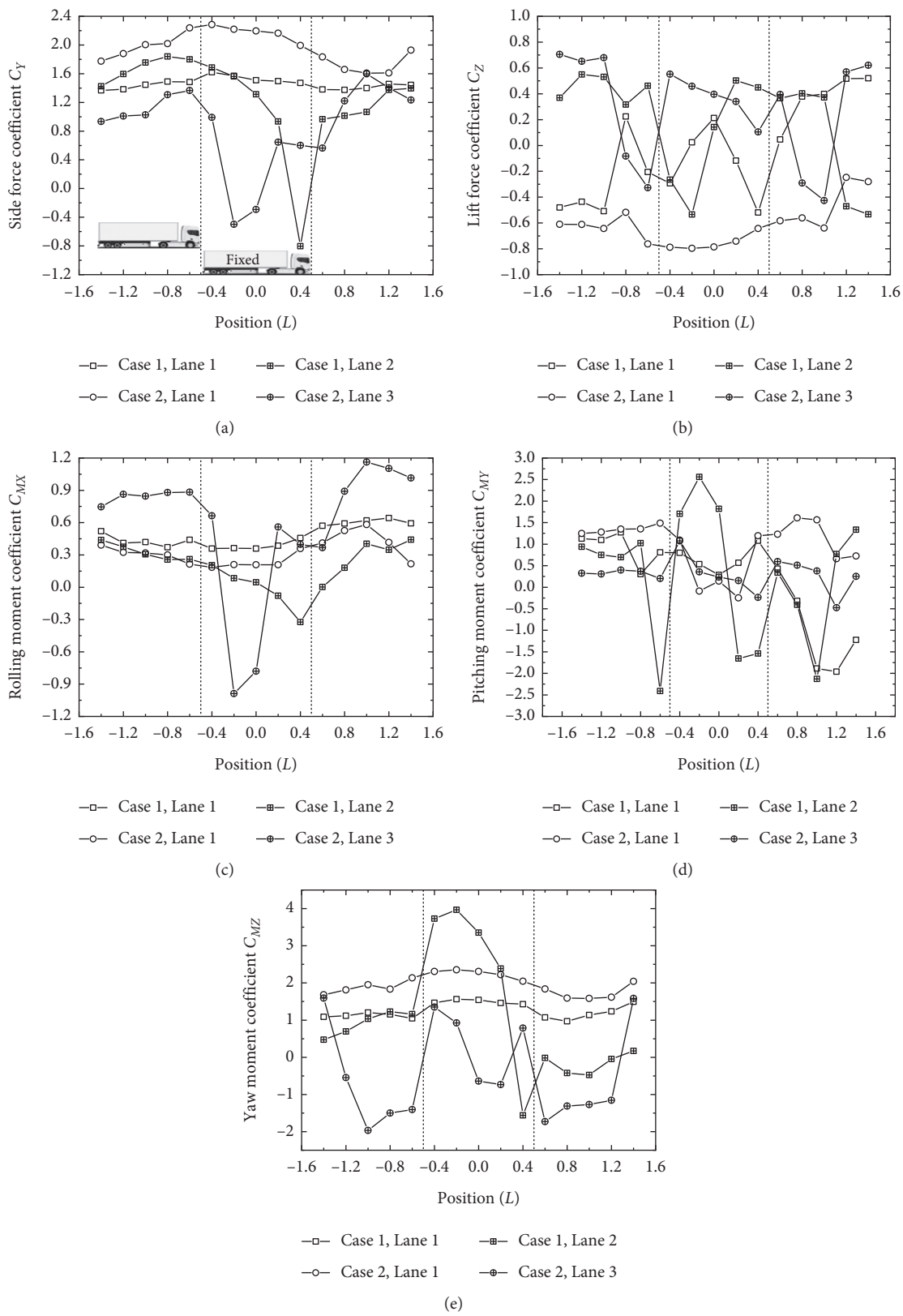

Figure 6: 3 s peak aerodynamic coefficient of the lorry.

and peak aerodynamic coefficients of the moving commercial van relative to the longitudinal position of windward lanes as commercial vans overtake each other. The side force (Figures 7(a) and 7(d)) and rolling moment coefficients (Figures 7(c) and 7(f)) in Case 3 are greater than those of Case 4 as vehicles move in the first lane, yet the lift coefficient

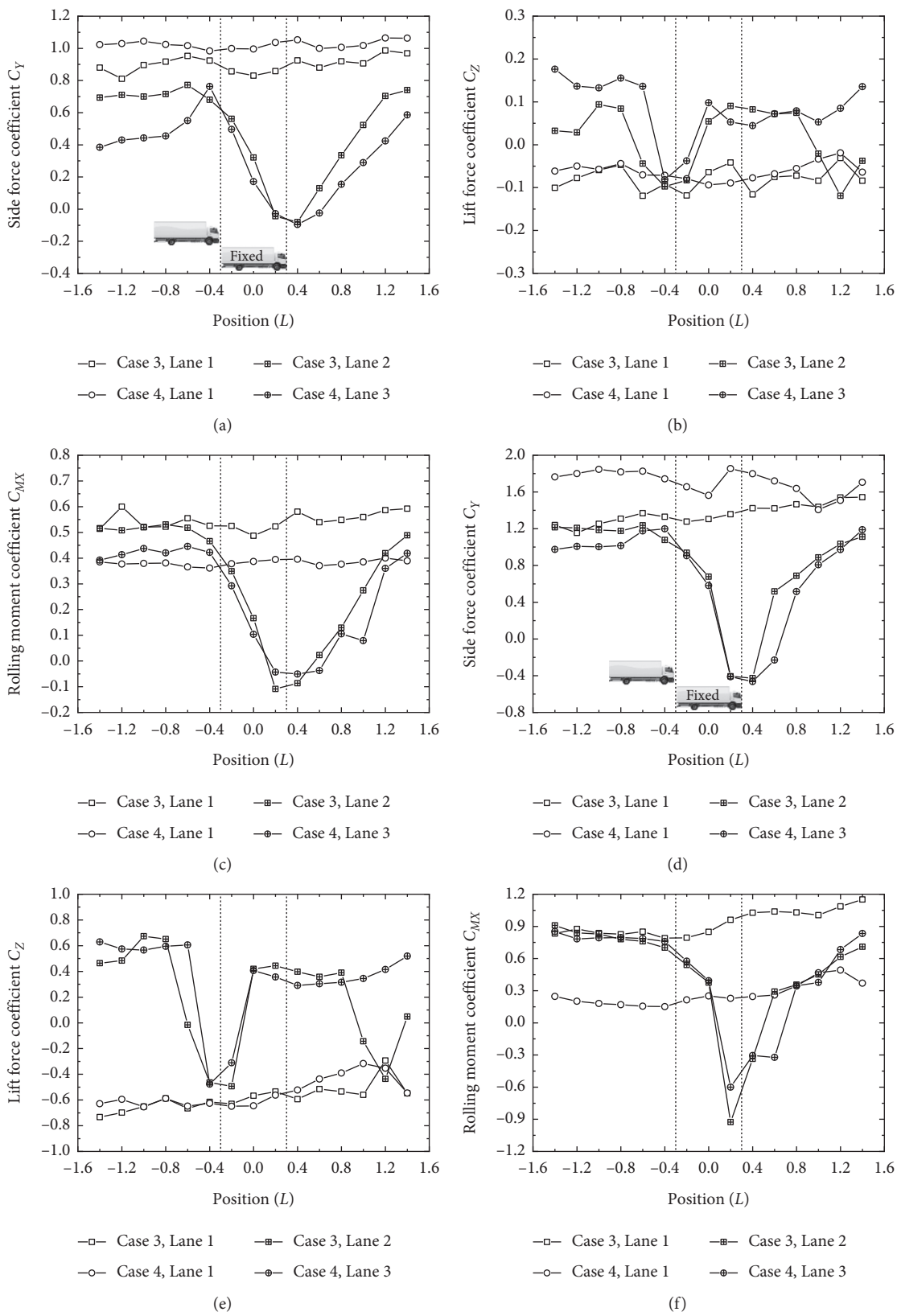

Figure 7: Aerodynamic coefficient of the van ((a), (b), (c) mean; (d), (e), (f) 3 s peak).

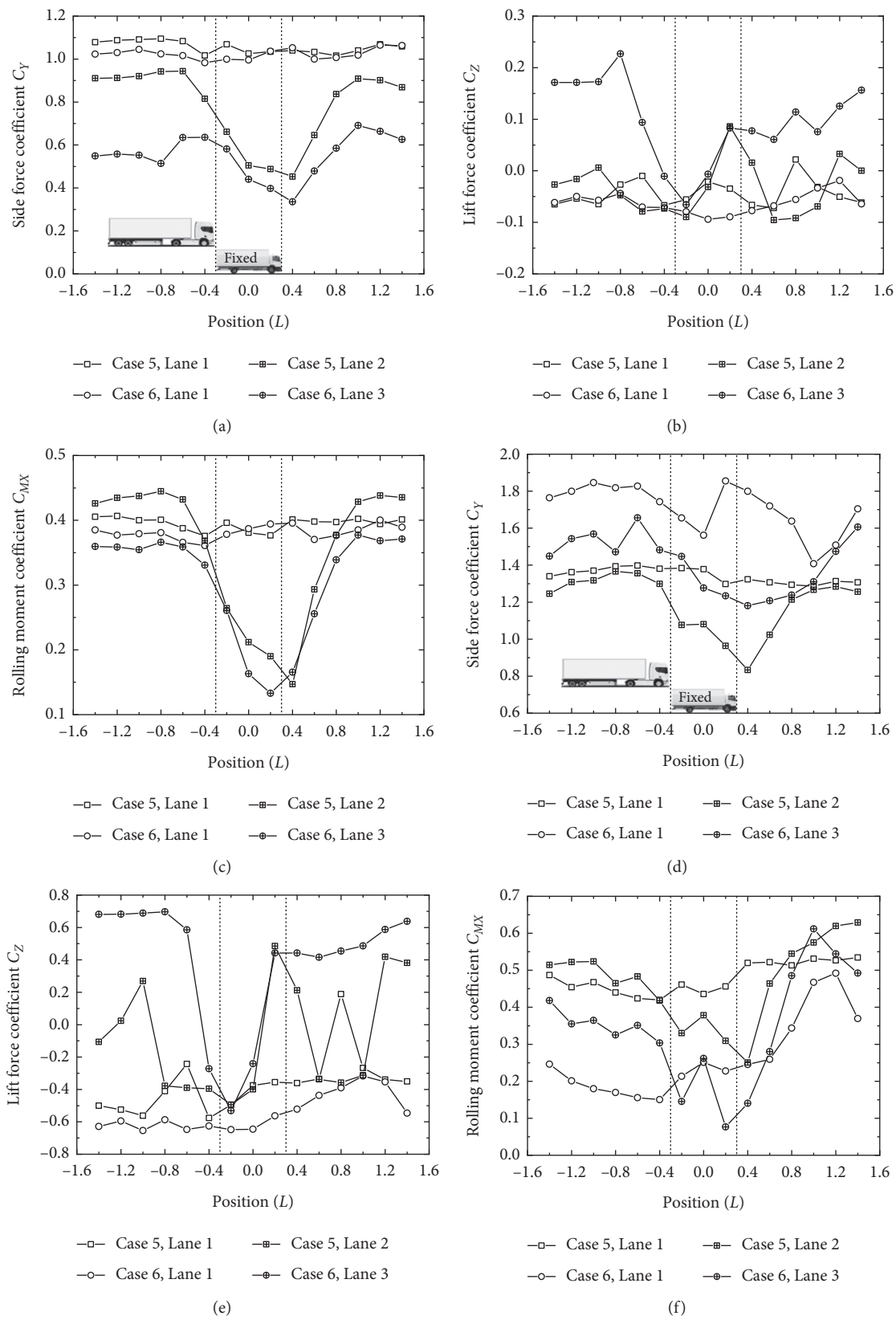

Figure 8: Aerodynamic coefficient of the lorry affected by van ((a), (b), (c) mean; (d), (e), (f) 3 s peak).

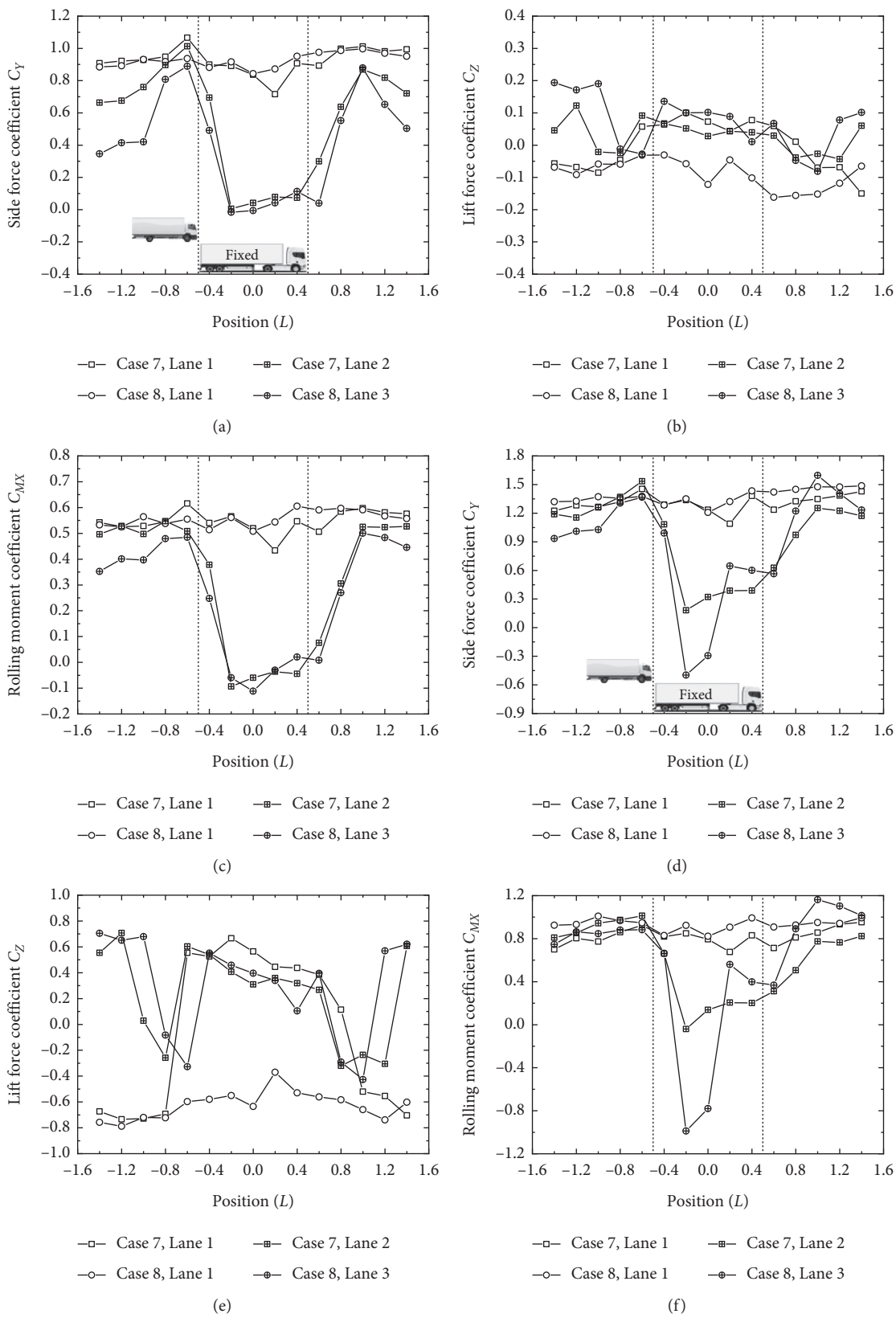

Figure 9: Aerodynamic coefficient of the van affected by lorry ((a), (b), (c) mean; (d), (e), (f) 3 s peak).

curves (Figures 7(b) and 7(e)) are pretty close in terms of mean and peak values. Obviously, the variation of the aerodynamic coefficients for the downstream vehicles is similar and the curves are very close. It indicates that the effects of the lateral spacing on the downstream vehicle are almost negligible compared with the articulated lorry (see Figure 5). It is worthy noting that the minimal aerodynamic coefficients are unavailable as vehicles abreast in row, which is not as expected. The minimal of the side force and rolling moment occurs at the first location ($X = 0.4L$) where the vehicle begins to leave. The lift coefficients get the minimal values in the position ($X = -0.4L$) where the vehicle starts to intersect.

3.3. Interaction of the Articulated Lorry and Commercial Van. Due to the differences in vehicle shape and size, the aerodynamic characteristics could be more complex for different types of vehicles overtaking compared with those of the same types. To investigate the aerodynamic characteristics of different types of road vehicles overtaking, the commercial van and articulated lorry are introduced into the case study.

The aerodynamic coefficients of the articulated lorry affected by a commercial van are shown in Figure 8. As seen, the magnitudes and variation trends of the aerodynamic coefficients of the articulated lorry are almost the same compared with the previous cases (see Figures 5 and 6) when it overtakes along the upstream first traffic lane. It is concluded that the aerodynamic characteristics of the upstream lorry depend on its aerodynamic state and it has nothing to do with the downstream vehicle type, no matter whether the downstream vehicle is a commercial van or articulated lorry, whereas the sheltering effects of the van on the articulated lorry are highlighted as the lorry moves on the downstream lanes. It is seen that the variation pattern of the aerodynamic curves and the position of the occurrence of the peak values are similar to the scenarios of Cases 3 and 4 (see Figure 7). Besides, due to the sheltering effects of van, the magnitudes of the aerodynamic coefficients decreased in some extent, and the minimal values of the side force and rolling moment coefficient reach 0.3 and 0.1 respectively, but are still positive.

Figure 9 illustrates the aerodynamic coefficients of the commercial van affected by an articulated lorry. It is seen that the aerodynamic coefficients of the commercial van, except the lift coefficients, do not change much as it overtakes in the upstream first lane. It is concluded that the lateral spacing still has some effect on the aerodynamic coefficient of the upstream vehicle. Meanwhile, the articulated lorry has a great influence on the downstream commercial van. On one hand, it greatly reduces the aerodynamic coefficient of the van; on the other hand, the trend of the aerodynamic coefficients forms a typical U-shaped curve, which is similar to the scenarios of Cases 1 and 2 (see Figure 5), and the length of the impact area roughly equals an articulated lorry.

4. Conclusions

The present work has been carried out by means of wind tunnel tests to investigate the variation of aerodynamic characteristics for the commercial van and articulated lorry overtaking on bridge deck under crosswind. Based on the previously mentioned, the following conclusions can be drawn:

(1) the aerodynamic coefficients of the lorry and van are almost unchanged with the overtaking process regardless of the downstream vehicle type and the lateral overtaking spacing as vehicles move on the upstream first lane; besides, the effects of the lateral overtaking spacing on the aerodynamic force of the upstream vehicles are very complex, which is closely related to the vehicle types of the overtaking and overtaken ones,

(2) due to the sheltering effects of the upstream vehicles, the aerodynamic coefficients of the downstream vehicle have experienced dramatic fluctuations; specifically, the variation of the side force and rolling moment coefficients have exhibited the occurrence of drastic declines firstly and then rapid increases as the overtaking process advanced; although the variation of the lift force coefficients had a similar trend, their variable quantity is very small compared with the others and it is not obvious,

(3) the curve shapes of the aerodynamic coefficients for downstream vehicles are highly dependent on the types of the upstream vehicle; the side force and rolling moment coefficient curves of the downstream vehicles, whether it is an articulated lorry or commercial van, present a typical U-shaped curve due to the influence of the upstream articulated lorry, and the minimum value appears in the state where vehicles are side by side, whereas, under the sheltering effects of the upstream van, the corresponding aerodynamic coefficient curves of the downstream vehicle exhibit a sharply varied V-shaped curve, and the minimum value occurs at the first location ($X = 0.4L$), where the vehicle begins to leave.

Data Availability

The original graph data used to support the findings of this study have been deposited in the Scholars Portal Dataverse repository (doi: 10.5683/SP2/T3UD8S).

Conflicts of Interest

The authors declare that they have no conflicts of interest regarding this work.

Acknowledgments

The authors are grateful for the financial support from the National Natural Science Foundation of China under grants 51608193 and 51778228, the National Key Basic Research Development Program (973 Program) Project (2015CB057702), A Project Supported by Scientific Research Fund of Hunan Provincial Education Department (16C0645, 17K034), and Research Fund of Hunan University of Science and Technology (KJ2048).

References

[1] C. Baker, F. Cheli, A. Orellano, N. Paradot, C. Proppe, and D. Rocchi, "Cross-wind effects on road and rail vehicles," *Vehicle System Dynamics*, vol. 47, no. 8, pp. 983–1022, 2009.

[2] C. J. Baker and S. Reynolds, "Wind-induced accidents of road vehicles," *Accident Analysis & Prevention*, vol. 24, no. 6, pp. 559–575, 1992.

[3] F. Chen and S. Chen, "Reliability-based assessment of vehicle safety in adverse driving conditions," *Transportation Research Part C: Emerging Technologies*, vol. 19, no. 1, pp. 156–168, 2011.

[4] L. D. Zhu, L. Li, Y. L. Xu, and Q. Zhu, "Wind tunnel investigations of aerodynamic coefficients of road vehicles on bridge deck," *Journal of Fluids and Structures*, vol. 30, pp. 35–50, 2012.

[5] J. Barden and K. Gerova, "An on-road investigation into the conditions experienced by a heavy goods vehicle operating within the United Kingdom," *Transportation Research Part D: Transport and Environment*, vol. 48, pp. 284–297, 2016.

[6] L. Salati, P. Schito, and F. Cheli, "Strategies to reduce the risk of side wind induced accident on heavy truck," *Journal of Fluids and Structures*, vol. 88, pp. 331–351, 2019.

[7] J. Niu, Y. Wang, L. Zhang, and Y. Yuan, "Numerical analysis of aerodynamic characteristics of high-speed train with different train nose lengths," *International Journal of Heat and Mass Transfer*, vol. 127, pp. 188–199, 2018.

[8] J. Wang, S. Tang, H. Zheng, C. Zhou, and M. Zhu, "Flexural behavior of a 30-meter full-scale simply supported prestressed concrete box girder," *Applied Sciences*, vol. 10, no. 9, p. 3076, 2020.

[9] N. Chen, Y. Li, B. Wang, Y. Su, and H. Xiang, "Effects of wind barrier on the safety of vehicles driven on bridges," *Journal of Wind Engineering and Industrial Aerodynamics*, vol. 143, pp. 113–127, 2015.

[10] S.-D. Kwon, D. H. Kim, S. H. Lee, and H. S. Song, "Design criteria of wind barriers for traffic -part 1: wind barrier performance," *Wind and Structures An International Journal*, vol. 14, no. 1, pp. 55–70, 2011.

[11] H. Xiang, Y. Li, S. Chen, and G. Hou, "Wind loads of moving vehicle on bridge with solid wind barrier," *Engineering Structures*, vol. 156, pp. 188–196, 2018.

[12] C. J. Baker, "Ground vehicles in high cross winds part I: steady aerodynamic forces," *Journal of Fluids and Structures*, vol. 5, no. 1, pp. 69–90, 1991.

[13] S. A. Coleman and C. J. Baker, "An experimental study of the aerodynamic behaviour of high sided lorries in cross winds," *Journal of Wind Engineering and Industrial Aerodynamics*, vol. 53, no. 3, pp. 401–429, 1994.

[14] M. Ogueta-Gutiérrez, S. Franchini, and G. Alonso, "Effects of bird protection barriers on the aerodynamic and aeroelastic behaviour of high speed train bridges," *Engineering Structures*, vol. 81, pp. 22–34, 2014.

[15] T. Zhang, W. Guo, and F. Du, "Effect of windproof barrier on aerodynamic performance of vehicle-bridge system," *Procedia Engineering*, vol. 199, pp. 3083–3090, 2017.

[16] M. Bocciolone, F. Cheli, R. Corradi, S. Muggiasca, and G. Tomasini, "Crosswind action on rail vehicles: wind tunnel experimental analyses," *Journal of Wind Engineering and Industrial Aerodynamics*, vol. 96, no. 5, pp. 584–610, 2008.

[17] Y. Li, P. Hu, Y.-L. Xu, M. Zhang, and H. Liao, "Wind loads on a moving vehicle-bridge deck system by wind-tunnel model test," *Wind and Structures*, vol. 19, no. 2, pp. 145–167, 2014.

[18] X.-Z. Li, M. Wang, J. Xiao, Q.-Y. Zou, and D.-J. Liu, "Experimental study on aerodynamic characteristics of high-speed train on a truss bridge: a moving model test," *Journal of Wind Engineering and Industrial Aerodynamics*, vol. 179, pp. 26–38, 2018.

[19] E. Deng, W. Yang, X. He, Y. Ye, Z. Zhu, and A. Wang, "Transient aerodynamic performance of high-speed trains when passing through an infrastructure consisting of tunnel-bridge-tunnel under crosswind," *Tunnelling and Underground Space Technology*, vol. 102, Article ID 103440, 2020.

[20] C. Noger and E. Van Grevenynghe, "On the transient aerodynamic forces induced on heavy and light vehicles in overtaking processes," *International Journal of Aerodynamics*, vol. 1, no. 3-4, pp. 373–383, 2011.

[21] C. Noger, C. Regardin, and E. Széchényi, "Investigation of the transient aerodynamic phenomena associated with passing manoeuvres," *Journal of Fluids and Structures*, vol. 21, no. 3, pp. 231–241, 2005.

[22] L. Liu, Y. Sun, X. Chi, G. Du, and M. Wang, "Transient aerodynamic characteristics of vans overtaking in crosswinds," *Journal of Wind Engineering and Industrial Aerodynamics*, vol. 170, pp. 46–55, 2017.

[23] F. Dorigatti, M. Sterling, C. J. Baker, and A. D. Quinn, "Crosswind effects on the stability of a model passenger train-A comparison of static and moving experiments," *Journal of Wind Engineering and Industrial Aerodynamics*, vol. 138, pp. 36–51, 2015.

[24] B. Wang, Y.-L. Xu, L.-D. Zhu, and Y.-L. Li, "Crosswind effects on high-sided road vehicles with and without movement," *Wind and Structures*, vol. 18, no. 2, pp. 155–180, 2014.

[25] A. Premoli, D. Rocchi, P. Schito, and G. Tomasini, "Comparison between steady and moving railway vehicles subjected to crosswind by CFD analysis," *Journal of Wind Engineering and Industrial Aerodynamics*, vol. 156, pp. 29–40, 2016.