Hindawi
Advances in Materials Science and Engineering
Volume 2018, Article ID 2107512, 7 pages
https://doi.org/10.1155/2018/2107512

Research Article

Influence of Buton Rock Asphalt on the Physical and Mechanical Properties of Asphalt Binder and Asphalt Mixture

Yafei Li,[1] Jing Chen,[1] Jin Yan,[1] and Meng Guo [2]

[1]*Research and Consulting Department of Engineering Structure and Materials Research Center, China Academy of Transportation Sciences, 240 Huixinli, Chaoyang District, Beijing 100029, China*
[2]*College of Architecture and Civil Engineering, Beijing University of Technology, Beijing 100124, China*

Correspondence should be addressed to Meng Guo; mguo@ustb.edu.cn

Received 20 December 2017; Revised 10 May 2018; Accepted 14 May 2018; Published 20 June 2018

Academic Editor: Ana María Díez-Pascual

In order to study the effect of different rock asphalt contents on the physical and mechanical properties of an asphalt binder and asphalt mixture, the physical and mechanical tests and analysis were conducted. An on-site case was investigated to verify the effectiveness of rock asphalt-modified pavement. The results show that the activation treatment can effectively enhance the molecular polarity of Buton rock asphalt. The "wet process" was used to prepare the Buton rock asphalt-modified asphalt binder, and the high-temperature performance and aging resistance were significantly improved. The modified asphalt prepared by mixing 30% rock asphalt shows the optimum balance between service performance and segregation. The on-site full-scale application of the Buton rock asphalt-modified asphalt pavement showed the good workability and service performance. This research demonstrated the ability of rock asphalt improving asphalt pavement on multiscales. It is helpful for the broader application of rock asphalt in asphalt pavement.

1. Introduction

Rock asphalt (RA) is a kind of asphalt coming from the petroleum flowing into the split cracks of rock. It is formed after billions of years of accumulation and changes under the combined action of heat, pressure, oxidation, catalyst, and bacteria. As a kind of natural asphalt, it is a kind of green, energy saving, environmental new pavement material because it has high degree of fusion with asphalt and does not require chemical processing. When it is used in the modified asphalt, it can improve the road performance of the modified asphalt, especially high-temperature stability, water resistance, and durability, with remarkable social and economical benefits. The Buton rock asphalt (BRA), as a representative product of rock asphalt, is produced in the Buton island of Indonesia. It comes from the sedimentation of the Jurassic marine animal fossils and is characterized by high asphalt content and high nitrogen content, being resiniferous and nonwaxy [1–5]. It is added to ordinary asphalt mixture as external admixture at home and abroad so as to improve the high-temperature performance and water stability performance of the asphalt mixture. This method is commonly known as "dry process." However, as seen from the application effect, the Buton rock asphalt cannot play its maximum role due to construction variability such as the mixing uniformity of construction [6–10].

Zhong et al. found that the addition of rock asphalt improved the high-temperature performance of petroleum bitumen binders and mixtures. The moisture damage resistance, tensile strength, and fatigue performance of petroleum mixture were enhanced as well. The low-temperature performance was slightly weakened [11]. Li et al. evaluated the potential impact of different types of rock asphalts on the performance of asphalt composites. They avoided the extraction of the asphalt binder from rock asphalt and simplified the process of evaluating the potential impact of rock asphalts on mixture performance. They found that addition of rock asphalts increases material stiffness and slightly reduces relaxation potential of asphalt composites at low-temperatures [12]. Zou and Wu studied the rheological

Table 1: Properties of the BRA used in this research.

Items	Unit	Test results	Technical requirements
Colour character	—	Brown powder	Black or brown powder
Ash content	%	61.7	≤80
Moisture content	%	2	≤2
Asphalt content	%	27	—
Particle size range	—	—	—
4.75 mm	%	100	100
2.36 mm	%	95.8	95~100
1.18 mm	%	82.8	>80

properties and field applications of the Buton rock asphalt. They found that with increasing BRA content, the binder's penetration decreased, softening point increased, dynamic viscosity at 60°C increased, and complex modulus increased. The BRA-modified asphalt concrete mixtures had better rutting performance as compared to the control asphalt concrete mixture sample [13]. Li et al. investigated the relationship between the microstructure and the performance of the Buton rock asphalt by using surface free energy and an infrared spectrum analysis. They found that mixing the BRA was a physical modification. An increase of rocking asphalt content can result in the increase of the hydrophobicity of the asphalt mixtures [14]. Rock asphalt can be seen as a composite consisting of asphalt binder and fillers. Therefore, for the interfacial behavior between rock asphalt and asphalt binder (or aggregate), refer Guo et al.'s research [15–18].

In view of the construction variability which is inevasible for the production of the Buton rock asphalt-modified asphalt by "dry process," this research innovatively put forward the "wet process." The rock asphalt is firstly pretreated by the activation process for preliminary grinding and activation. Then, the activated rock asphalt is mixed with the matrix asphalt. Finally, the mix asphalt is grinded by colloid mill to produce the modified rock asphalt. This process can fully integrate the rock asphalt with the matrix asphalt, thus effectively promoting the cross-linking polymerization of the polar functional groups in the rock asphalt and the active groups (carboxyl, aldehyde, carbonyl, and naphthalene) in the matrix asphalt, improving the arrangement mode and net structure (node and strength) of the matrix asphalt molecules and enhancing the asphalt cohesion. In this way, it significantly improves the antifluidity, antioxidation, adhesion, and temperature susceptibility of the modified asphalt, thus improves the high-temperature resistance, water damage resistance, and fatigue performance of the mixture of rock asphalt and modified asphalt, and makes the mixture more suitable for large-scale production.

2. Materials and Methods

2.1. Raw Materials. The raw material of the Buton rock asphalt (BRA) is the rock asphalt powder produced by Hubei Zhengkang Asphalt Technology Co., Ltd. The specific performance indicators are shown in Table 1, and all technical indicators meet the specification requirements [19].

2.2. Activation Pretreatment. The activation pretreatment aims at improving the degree of fusion between the rock asphalt and the matrix asphalt and thus fully exerts the modification ability of the rock asphalt [13]. The concrete process is as follows. The rock asphalt is firstly broken up and dehydrated and then is grinded at high temperature. According to microscopic image characterization, the rock asphalt molecules have extremely strong polarity after high-temperature "activation." They connect the asphalt molecules in the matrix asphalt and the resin and ash content in the rock asphalt together to form a stable multidimensional net structure which effectively improves the performance of the matrix asphalt, as shown in Figures 1 and 2.

2.3. "Wet Process" of the Buton Rock Asphalt. Specifically, the "wet process" of the Buton rock asphalt developed in this paper includes the following: the matrix asphalt is firstly preheated from 150°C to 160°C by a heating system and is then pumped to the asphalt tank. At the same time, the Buton asphalt mixture, which has been broken and dehydrated, is added to the feed inlet and is slowly added to the matrix asphalt. Then, the mixing device is started. After stirring for 0.5 h to 1 h, the premix is pumped into the self-developed colloid mill for full grinding. The rock asphalt particles are grinded to less than 100 mesh. When they uniformly suspend in the matrix asphalt, the modified rock asphalt can be obtained. Finally, the prepared modified Buton rock asphalt is stored in the storage tank for proper storage. The specific equipment design drawings and the entity diagram of the equipment are shown in Figures 3 and 4.

2.4. Sample Preparation. In order to compare the influence of different mixing amounts of the Buton rock asphalt on the performance of modified asphalt and asphalt mixture and determine the optimum mixing amount of rock asphalt, 10%, 20%, 30%, 40%, and 50% of the activated rock asphalt are, respectively, added to the No. 70 road petroleum asphalt to produce the modified Buton rock asphalt according to the "wet process." The performance of modified asphalt and modified asphalt mixture is tested.

2.5. Testing Protocols

2.5.1. Asphalt Binder. Penetration test, softening point test, and ductility test were conducted according to the Test Specification of Asphalt and Asphalt Mixture (JTG E20–2011) [20].

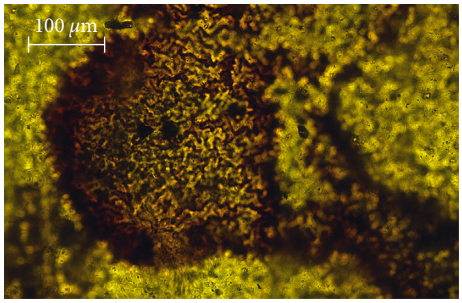

Figure 1: Rock asphalt after activation pretreatment.

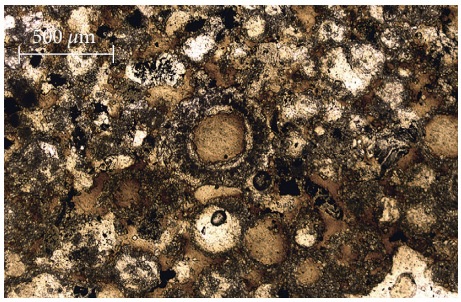

Figure 2: Multidimensional network of rock asphalt.

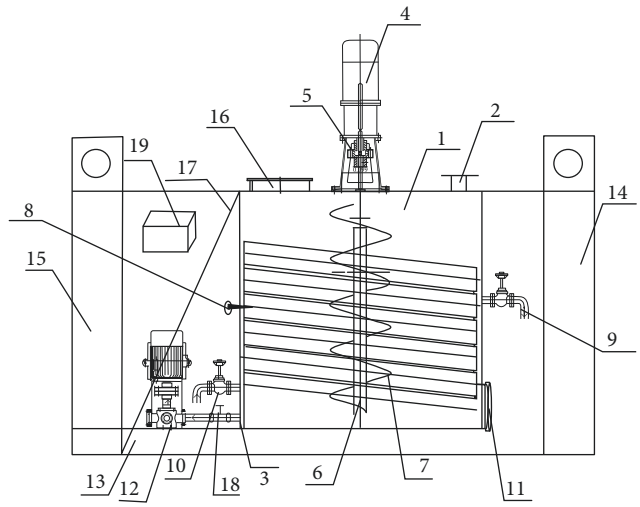

Figure 3: Schematic of the device used for preparation of rock asphalt-modified asphalt binder. 1: agitator tank; 2: feed port; 3: discharge port; 4: mixing motor; 5: reducer; 6: stirring shaft; 7: helical blade; 8: thermometer; 9: first high-temperature gate valve; 10: second high-temperature gate valve; 11: service port; 12: production delivery pump; 13: baseboard; 14: first side plate; 15: second side plate; 16: man way; 17: ladder stand; 18: insulation two-way; 19: distribution box.

Figure 4: Picture of the device used for preparation of the rock asphalt-modified asphalt binder.

The gravimetric capillary method was used to measure the kinematic viscosity of the asphalt binder at 135°C. Measurements using capillary viscometers were based on the relation between viscosity and time. The more viscous the asphalt, the longer it will take to flow through a capillary under the influence of gravity alone. There are several standardized capillaries in use today. Most laboratory instruments employ glass capillaries or "tubes." A more recent advancement for field measure of kinematic viscosity employs a split aluminum cell capillary. In this research, the manual constant temperature bath system consisting of a very precise temperature-controlled bath was used. A sample of the asphalt binder was suctioned into the tube until it reaches the start point. The suction was then released, and the asphalt binder flowed by gravity through the controlled capillary section of the tube. Two or three marks were visible on the tube. We watched the meniscus of the asphalt binder as it passes the start point. At this point, we recorded the time it took the asphalt binder to pass the final mark. The tubes were selected such that the test would take a minimum of 200 secs to complete. This made it easier for manual timekeeping. More details can be found in ASTM D445.

2.5.2. Asphalt Mixture. Dynamic stability and residual stability can be obtained from the basic Marshall tests of asphalt mixtures [20]. Regarding freeze-thaw splitting tests, the compaction method of the specimen of the freeze-thaw cycle test was gyratory compacting. The diameter of the specimen was 100 mm, and the height was 63.5 mm ± 1.3 mm. The procedure of the free-thaw cycle is as follows:

(1) The specimens were randomly divided into two groups. The first group of the specimen was kept on the platform at room temperature; the second group of the specimen was immersed in water with 97.3~98.7 kPa for 15 minutes, then the valve was opened, and the specimen was kept in the water without pressure for 0.5 hours.

(2) The second group of specimens was removed into a plastic bag with 10 ml of water, and then the condition temperature was maintained at −18°C ± 2°C for 16 hours.

(3) The specimens removed from the low-temperature case were immediately put in the water tank at the temperature of 60°C ± 0.5 °C for 24 hours.

The specimens were kept in 25°C ± 0.5°C constant temperature water tank for 2 hours and then were removed, and immediately splitting loading by the MTS machine was applied. The loading rate is 50 mm/min. The indirect tensile strength is calculated according to the following equation, and the TSR is calculated according to (2):

Table 2: Influence of different rock asphalt contents on the properties of the asphalt binder.

Test items	Sample types					
	Pure asphalt	Pure asphalt + 10% BRA	Pure asphalt + 20% BRA	Pure asphalt + 30% BRA	Pure asphalt + 40% BRA	Pure asphalt + 50% BRA
Penetration (25°C, 100 g, 5 s) (0.1 mm)	73	66	58	55	46	32
Softening point (°C)	46	48	50	52	58	60
Ductility (15°C, 5 cm/min) (cm)	100	68	42	34	21	12
Kinematic viscosity at 135°C (Pa·s)	0.452	0.476	0.512	0.625	0.856	1.343
Difference of softening points between 0 and 48 hours (°C)	—	0.5	1	1.5	2.5	4
Ratio of penetrations before and after RTFOT test	71	75	81	86	83	82

$$R_T = \frac{0.006287 P_T}{h}, \quad (1)$$

where R_T is the indirect tensile strength (MPa), P_T is the maximum value of the test load (N), and h is the specimen height (mm).

$$\text{TSR} = \left(\frac{R_{T2}}{R_{T1}}\right) \times 100, \quad (2)$$

where TSR is the tensile strength ratio (%), R_{T1} is the indirect tensile strength before freeze-thaw cycle (MPa), and R_{T2} is the indirect tensile strength after freeze-thaw cycle (MPa).

This study used the low-temperature blending test to evaluate the low-temperature anticracking performance of asphalt mixtures. The blending failure strain was selected as the evaluation index of low-temperature performance of asphalt mixtures. The bigger the blending failure strain, the better the low-temperature performance of asphalt mixtures. The diameter of specimens was 250 mm × 30 mm × 35 mm. The test temperature was −10 °C, and the loading rate was 1 mm/min.

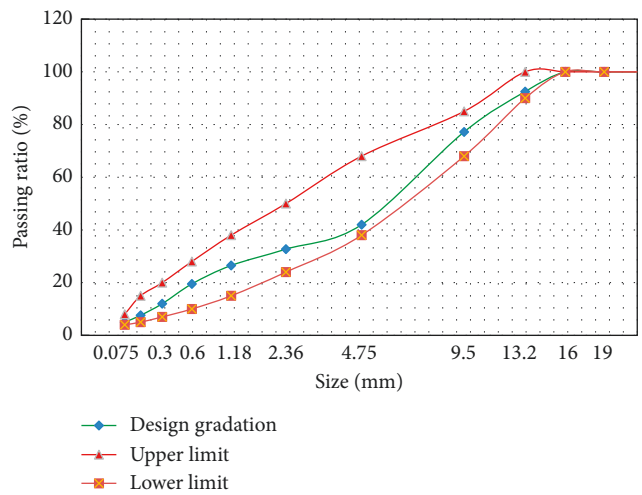

Figure 5: Gradation of selected AC-13 asphalt mixture.

3. Results and Discussion

3.1. Influence of Different Rock Asphalt Contents on the Physical and Mechanical Properties of Asphalt Binder. Related tests are carried out on the No. 70 road petroleum asphalt and modified rock asphalt with different mixing amounts according to the Test Specification of Asphalt and Asphalt Mixture (JTG E20–2011) [20]. The test results are shown in Table 2.

It can be seen from Table 2 that the penetration value decreased and the softening point increased with the increase of BRA content. It indicates that BRA can improve the permanent deformation resistance of the asphalt binder, further to improve the high-temperature service performance of BRA-modified asphalt pavement. Table 2 also shows that the ductility decreased dramatically after BRA modification. It means the elongation ability of asphalt approached a limit, and most probably it was the same for elasticity of asphalt that was a fundamental property for lasting serving life of flexible pavement. Regarding viscosity, the more viscous asphalt requires more energy consumption in every single process of asphalt industry including storage, transporting, placing, and compacting. Therefore, a greater viscosity could be disadvantageous for construction of asphalt pavement. However, a greater viscosity also can help the asphalt pavement resisting the high-temperature rutting. Selecting a proper BRA/asphalt binder ratio to obtain a suitable viscosity to balance the workability and service performance of asphalt pavement is a key of BRA application. At the same time, after the aging of the rotating film, the residual penetrations of the modified Buton rock asphalt with five different mixing amounts are all higher than that of the matrix asphalt, indicating that the antiaging performance of the modified Buton rock asphalt has obvious improvement. In addition, the storage stability of the modified Buton rock asphalt decreases with the increase of rock asphalt content. After mixing 40% and 50% of rock asphalt, the differences of softening points of BRA-modified asphalt between 0 and 48 hours were 2.5°C and 4°C, respectively. It indicates that the modified Buton rock asphalt has relatively serious segregation. According to the requirement of Technical Specifications for Construction of Highway Asphalt Pavements (JTG F40-2004), the difference of softening points of modified asphalt between 0 and 48 hours should be less than 2.5°C [21]. Thus, 40% and 50% are not recommended as the best mixing amount of rock asphalt.

3.2. Influence of Different Rock Asphalt Contents on the Physical and Mechanical Properties of Asphalt Mixture.

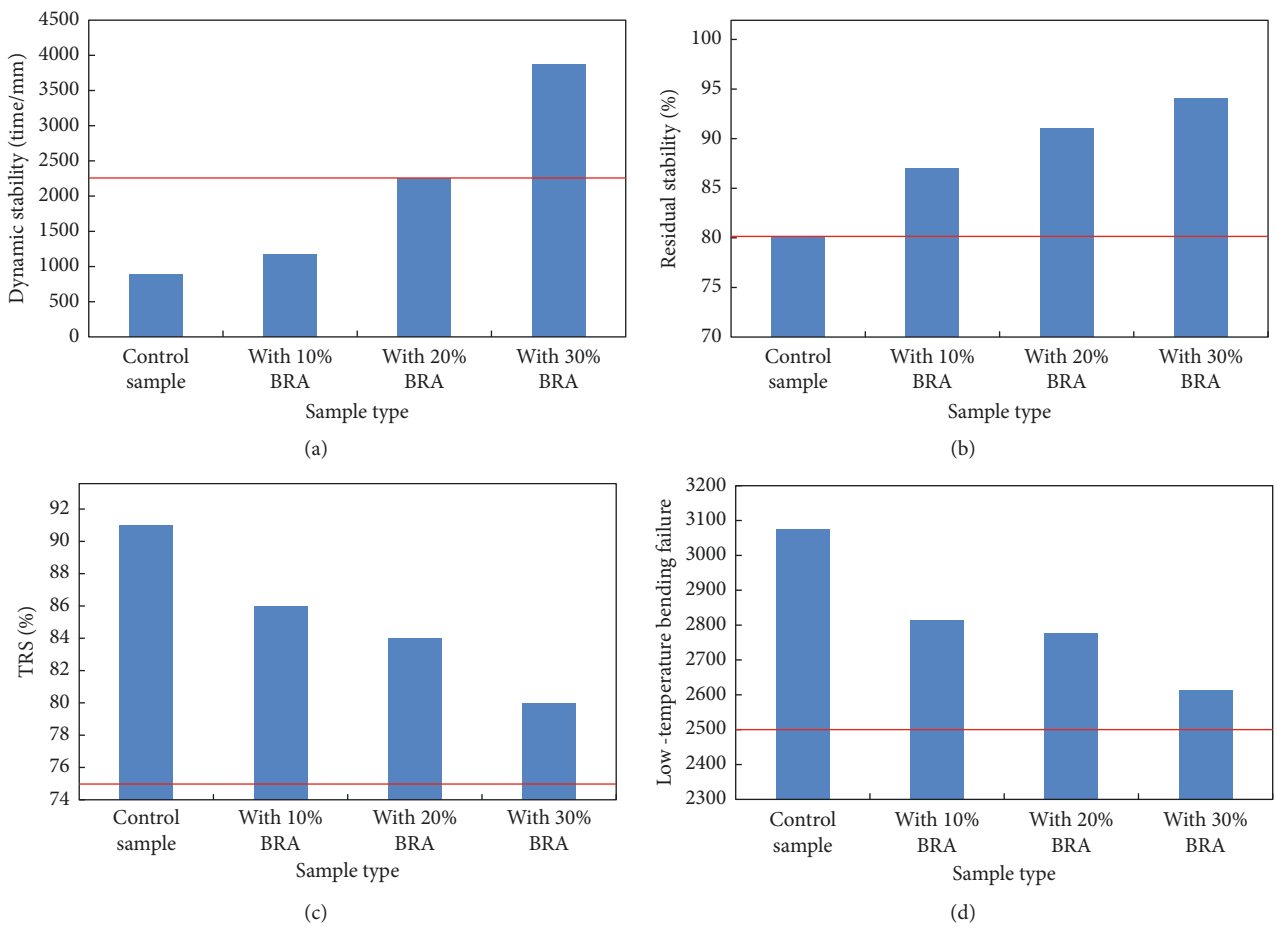

Figure 6: Effect of different rock asphalt contents on the performance of asphalt mixture. (a) Dynamic stability. (b) Residual stability. (c) Freeze-thaw split strength ratio TSR. (d) Low-temperature bending failure strain.

According to the above analysis, the modified Buton rock asphalt with a mixing amount of 40% or 50% has more serious segregation. Therefore, in the performance analysis of the modified Buton rock asphalt, this paper only compares the performances of the modified Buton rock asphalt mixture with a mixing amount of 10%, 20%, and 30%, respectively. And based on this, the best mixing amount of the modified Buton rock asphalt is determined. The AC-13-type asphalt mixture is selected as the test object with gradation shown in Figure 5.

The Marshall test is carried out to determine the best asphalt-aggregate ratio of the modified Buton rock asphalt with different mixing amounts. In addition, the high-temperature rutting test, low-temperature beam bending test, immersion Marshall test, and freeze-thaw splitting test are also carried out according to the specification [20]. The detailed test procedure can be found at Section 2.5. According to the technical specifications for modified asphalt pavements, the dynamic stability should be larger than 2400 time/mm, the residual stability should be larger than 80%, and the TSR value should be larger than 75% [21]. The detailed tests results are shown in Figure 6.

It can be seen from Figure 6 that the dynamic stability and residual stability of the Buton rock asphalt mixture increase with the increase of the mixing amount of rock asphalt, and the beam bending failure and freeze-thaw splitting strength ratio

Figure 7: The connection between the rock asphalt modification equipment and the mixing plant.

increase with the increase of the mixing amount of rock asphalt, indicating that the high-temperature resistance and antistrip performance of modified asphalt mixture increase significantly with the increase of rock asphalt content, and its low-temperature crack resistance and low-temperature freezing resistance decrease with the increase of the mixing amount of rock asphalt. When the mixing amount of rock asphalt reaches 30%, the modified Buton asphalt mixture has the best high-temperature antirutting performance and antistrip

Table 3: Properties of the rock asphalt-modified asphalt binder in the field.

Test items	Penetration (25°C, 100 g, 5 s) (0.1 mm)	Softening point (°C)	Ductility (15°C, 5 cm/min) (cm)	Kinematic viscosity at 135°C (Pa·s)	Difference of softening point between 0 and 48 hours (°C)	Ratio of penetrations before and after RTFOT test (%)
Value	53	51	33	0.575	1.5	83

Table 4: Physical properties of rock asphalt-modified asphalt mixture in the field.

Test items	Asphalt-aggregate ratio (%)	Theoretical maximum relative density	Bulk relative density	Void content (VV) (%)	Voids in mineral aggregate (VMA) (%)	Voids of mineral aggregate that are filled with asphalt (VFA) (%)
Value	4.8	2.544	2.451	3.7	14.1	74.2

Table 5: Mechanical properties of rock asphalt-modified asphalt mixture in the field.

Test items	Stability (MS) (kN)	Flow number (FL) (mm)	Dynamic stability (time/mm)	Residual stability (%)	Freeze-thaw split strength ratio (%)	Low-temperature bending failure strain ($\mu\varepsilon$)
Value	12.64	3.5	3376	91	81	2683

performance, and its low-temperature crack resistance and low-temperature freezing resistance also meet the regulatory requirements. Thus, it is recommended to set 30% as the best mixing amount of the rock asphalt.

3.3. Case Application. The rock asphalt-modified asphalt pavement was implemented in the major maintenance project of asphalt pavement of the Huoqiu section of S310 Linye Road within Lian City of Anhui Province. This section was built according to the secondary highway standard, with a design speed of 60 kilometers per hour. After milling, the AC-13 asphalt mixture with a thickness of 4 cm was paved. The asphalt is the Ssangyong virgin asphalt produced in Jiangyin, South Korea The coarse and fine aggregates come from the Chaohu Zhongcai Limestone Gravel Plant, and it is composed of limestone; the mineral powder is produced by Lvan Traffic Industry Co., Ltd. The connection between the rock asphalt modification equipment and the mixing plant is shown in Figure 7.

According to the local climate and traffic characteristics, 30% rock asphalt was mixed in the matrix asphalt for processing modified rock asphalt. More details can be found in Technical Specifications for Construction of Highway Asphalt Pavements. JTG F40-2004 [21]. The specific properties are shown in Table 3.

According to the Marshall test, the best asphalt-aggregate ratio was determined. And the related road performance is tested. The specific data are shown in Tables 4 and 5. The test methods were all standard procedure. They can be found in Technical Specifications for Construction of Highway Asphalt Pavements (JTG F40-2004) [21]. As can be seen from the tables, the design requirements are met.

According to the test results, the heating temperature of the modified Buton rock asphalt is 140°C to 150°C. The aggregate heating temperature is 170°C to 180°C. The dry mixing time of the aggregate is 7 s, and the wet mixing time is 42 s. The out-feeding temperature is determined as 150°C to 160°C. The on-site construction technology includes two times of rolling by the single vibratory road roller with a weight of 13 tons, 6 times of rolling by the rubber-tired roller with a weight of 26 tons and one time of rolling for leveling carried out by the single vibratory road roller with a weight of 11 tons.

The mixture paved on the site is uniform without segregation, and the cored sample demonstrates that the compaction degree can reach 98%.

4. Conclusions

The objective of this study was to investigate the effect of different rock asphalt contents on the physical and mechanical properties of the asphalt binder and asphalt mixture by conducting mechanical tests and microstructure analyzation. The following is a summary of conclusions that can be drawn based on the aforementioned results and discussion:

(1) The activation treatment is carried out on the Buton rock asphalt powder, which effectively enhances the molecular polarity of rock asphalt, promotes the coupling of resin and ash content in the rock asphalt and the matrix asphalt, and thus forms a stable multi-dimensional net structure to improve the performance of the matrix asphalt.

(2) In this study, the self-developed on-site modification equipment is innovatively adopted. The activated Buton rock asphalt is added to the matrix asphalt by "wet process" to prepare the modified Buton rock asphalt which has significantly improved high-temperature resistance and aging resistance.

(3) The modified asphalt prepared by mixing 40% rock asphalt has more serious segregation. According to the comparison test of road performance, it is concluded that the modified asphalt prepared by mixing 30% rock asphalt has more balanced properties. Thus, 30% is recommend as the best mixing amount for the production of modified rock asphalt by "wet process."

(4) According to the verification of entity engineering, the modified Buton rock asphalt mixture prepared by "wet process" has better application property and workability and is suitable for large-scale production. However, due to the short completion time of the test section, the long-term performance of pavement cannot be reflected completely. The long-term performance observation of the test section will be carried out in the further work.

Conflicts of Interest

The authors declare no conflicts of interest.

Authors' Contributions

Yafei Li and Jing Chen conceived and designed the experiments; Yafei Li performed the experiments; Yafei Li and Meng Guo analyzed the data; Jin Yan contributed reagents/materials/analysis tools; Meng Guo wrote the paper.

Acknowledgments

This study was supported by Beijing Natural Science Foundation (8174071) and Quota Funds for Promoting the Connotation Development of Universities, Beijing University of Technology (004000514118017).

References

[1] N. M. Jackson and E. L. Dukatz, "An evaluation of the suitability of the superpave system to the design of limestone rock asphalt (LRA) mixes," in *Symposium on Progress of Superpave (Superior Performing Asphalt Pavement)-Evaluation and Implementation*, vol. 1322, pp. 118–125, ASTM, West Conshohocken, PA, USA, 1997.

[2] B. S. Subagio, B. Siswosoebrotho, and R. Karsaman, "Development of laboratory performance of Indonesian rock asphalt (ASBUTON) in hot rolled asphalt mix," *Proceedings of the Eastern Asia Society for Transportation Studies*, vol. 4, no. 1-2, pp. 436–449, 2003.

[3] H. L. Li, T. Liu, and H. W. Xie, "Experimental investigation on asphalt modified by Xinjiang Wuerhe rock asphalt," in *Proceedings of the 5th China/Japan Workshop on Pavement Technologies*, Xi'an, China, p. 179, 2009.

[4] D. W. Cao and Y. F. Yi, "Study of colloidal properties of natural rock asphalt," in *Proceedings of the International Workshop on Energy and Environment in the Development of Sustainable Asphalt Pavements*, Xi'an, China, p. 130, 2010.

[5] S. W. Du and C. F. Liu, "Performance evaluation of high modulus asphalt mixture with Button rock asphalt," *Advanced Materials Research*, vol. 549, pp. 558–562, 2012.

[6] F. Ma and C. Zhang, "Road performance of asphalt binder modified with natural rock asphalt," *Advanced Materials Research*, vol. 634–638, pp. 2729–2732, 2013.

[7] W. T. Huang and G. Y. Xu, "Experimental study of high temperature properties and rheological behavior of Iranian rock asphalt," *Advanced Materials Research*, vol. 671–674, pp. 1277–1281, 2013.

[8] G. Rusbintardjo, "Utilization of Buton natural rock asphalt as additive of bitumen binder in hot mix asphalt mixtures," *Advanced Materials Research*, vol. 723, pp. 543–550, 2013.

[9] J. Li, X. N. Zhang, Y. Liu, and C. H. Wu, "Study on the elemental analysis and relative molecular weight of 5U rock asphalt," *Advanced Materials Research*, vol. 734–737, pp. 2132–2135, 2013.

[10] A. Kawakami, I. Sasaki, K. Kubo, S. Ueno, M. Hermadi, and W. Pravianto, "Possibility to utilize new natural rock asphalt for guss asphalt," in *Asphalt Pavements*, pp. 1513–1520, CRC Press, Boca Raton, FL, USA, 2014.

[11] K. Zhong, X. Yang, and S. Luo, "Performance evaluation of petroleum bitumen binders and mixtures modified by natural rock asphalt from Xinjiang China," *Construction and Building Materials*, vol. 154, pp. 623–631, 2017.

[12] R. X. Li, P. Karki, P. W. Hao, and A. Bhasin, "Rheological and low temperature properties of asphalt composites containing rock asphalts," *Construction and Building Materials*, vol. 96, pp. 47–54, 2015.

[13] G. L. Zou and C. Wu, "Evaluation of rheological properties and field applications of Buton rock asphalt," *Journal of Testing and Evaluation*, vol. 43, no. 5, article 20130205, 2015.

[14] J. Li, X. X. Guo, Y. Z. Jiang, N. N. Bai, Y. Liu, and C. H. Wu, "A micro-analysis of Buton rock asphalt," *Journal of Computational and Theoretical Nanoscience*, vol. 12, no. 9, pp. 2751–2756, 2015.

[15] M. Guo, A. Bhasin, and T. Q. Tan, "Effect of mineral fillers adsorption on rheological and chemical properties of asphalt binder," *Construction and Building Materials*, vol. 141, pp. 152–159, 2017.

[16] M. Guo, Y. Q. Tan, J. X. Yu, Y. Hou, and L. B. Wang, "A direct characterization of interfacial interaction between asphalt binder and mineral fillers by atomic force microscopy," *Materials and Structures*, vol. 50, p. 141, 2017.

[17] Y. Q. Tan and M. Guo, "Using surface free energy method to study the cohesion and adhesion of asphalt mastic," *Construction and Building Materials*, vol. 47, pp. 254–260, 2013.

[18] M. Guo, Y. Q. Tan, and S. W. Zhou, "Multiscale test research on interfacial adhesion property of cold mix asphalt," *Construction and Building Materials*, vol. 68, pp. 769–776, 2014.

[19] Ministry of Transport of the People's Republic of China, *Modifiers for Asphalt Mixture–Part 5: Natural Asphalt*, JT/T860.5-2014, Ministry of Transport of the People's Republic of China, Beijing, China, 2014.

[20] Ministry of Transport of the People's Republic of China, *Standard Test Methods of Bitumen and Bituminous Mixture for Highway Engineering*, JTG E20-2011, Ministry of Transport of the People's Republic of China, Beijing, China, 2011.

[21] Ministry of Transport of the People's Republic of China, *Technical Specifications for Construction of Highway Asphalt Pavements*, JTG F40-2004, Ministry of Transport of the People's Republic of China, Beijing, China, 2004.