Hindawi
Advances in Materials Science and Engineering
Volume 2019, Article ID 8920718, 21 pages
https://doi.org/10.1155/2019/8920718

Research Article

Strengthening and Rehabilitation of U-Shaped RC Bridges Using Substitute Cable Ducts

Adam Svoboda, Ladislav Klusáček, and Martin Olšák

Institute of Concrete and Masonry Structures, Brno University of Technology, Veveří 331/95, 602 00 Brno, Czech Republic

Correspondence should be addressed to Adam Svoboda; svoboda.a@fce.vutbr.cz

Received 23 July 2019; Revised 20 September 2019; Accepted 23 October 2019; Published 30 November 2019

Academic Editor: Mohammad A. Hariri-Ardebili

The presented paper deals with strengthening and rehabilitation of U-shaped reinforced concrete bridges from the period of 1905–1930 using post-tensioning, which is a suitable, reliable, and durable method. These bridges have two main beams pulled over the bridge deck, which is supported by cross girders. The cross girders connect the two main beams forming a half-frame in the transverse direction, which provides spatial rigidity to the structure. The spans of these bridges are usually between 15 and 25 m. The high efficiency of post-tensioning can be seen on many implemented applications for bridge reconstructions worldwide. However, in this paper, the post-tensioning method is extended by a unique structural system of substitute cable ducts that allows for significantly expanding applicability of this method on existing concrete bridges. This method is highly recommended due to minimization of interventions into the constructions, unseen method of cable arrangement, and hence the absence of impact on appearance, which is appreciated not only in case of valuable historical structures but in general as well. In conclusion, the post-tensioning by monostrands in substitute cable ducts is a highly efficient method for strengthening of existing bridges in order to increase their load-bearing capacities in terms of current traffic load and to extend their service life. This method was also verified by monitoring the behavior of rehabilitated bridges before and after strengthening.

1. Introduction

Reinforced concrete beam bridges have been built since the very beginnings of reinforced concrete. Both simple and continuous parapet bridges represent a suitable structural option of beam bridges because of their small construction height (U-shaped bridges, camelback bridges, and trough girder bridges). These structures have been developed near Michigan, USA, and soon they have spread in Europe as well [1]. There is still a couple of hundred of these structures around the roadways in the Czech Republic [2].

The oldest U-shaped bridges were built between 1905 and 1915, and they were designed in accordance with the Austrian Ministry of Railways Bridge Standard of August 1904 [3]. At that time, the largest load the road bridges had to endure on the primary roads was an 18 t (180 kN) steamroller or a uniformly distributed load of 460 kg/m^2 (4.6 kN/m^2) over the surface of the bridge [4]. This bridge type was very popular up until 1930, but from the standpoint of current traffic demands upon bridge structures, it usually does not comply because of its load-bearing capability and an efficient strengthening and total reconstruction has to be performed upon bridge structure [5]. These concrete bridges are also valuable from the historical standpoint because they represent a legacy of the first generation of reinforced concrete bridge engineers.

1.1. Reinforced Concrete Bridge Strengthening Using the Substitute Cable Duct Method. Post-tensioning is a suitable, reliable, and durable method for reinforced concrete bridge strengthening. A strengthening system using post-tensioning effects has also been discussed in previous studies and applications; for example, Recupero et al. [6, 7] presented an application of external prestressing technique for strengthening a single-span concrete railway bridge in Italy. The effect of strengthening was also researched with the help of numerical simulations. Nilimaa et al. [8] focused on

strengthening of concrete railway bridges (in Sweden) in the transverse direction using prestressed bars installed in additionally drilled holes in the existing concrete. Petrangeli et al. [9] published a paper focused on strengthening of the continuous reinforced concrete bridge in 1976 in Ethiopia across the Gibe river using external prestressing tendons. Daly and Witarnawan in articles [10, 11] presented two applications of strengthening composite (steel-concrete) bridges in Indonesia using external prestressing and also discussed key parameters for designing such a system. Woodward and Daly [12] examined the effect of external prestressed tendons within an experiment on a bridge model of a 1 : 4 scale. The experimental load tests have shown that the post-tensioning method provides a safe and stable method of strengthening. Dai et al. [13] examined the strengthening technique with double-layer prestressed steel wire ropes (PSWRs) to enhance the serviceability of an existing concrete box girder. Miyamoto et al. [14] studied the behavior of prestressed beams strengthened with external tendons. In the presented paper, simply supported prestressed composite girders with alternating prestressing levels, eccentricity of tendons, and tendon properties are examined. Mimoto et al. [15] developed a strengthening system using post-tensioned tendons with internal anchorages in the existing concrete. The internal anchorage hole is made using a special drilling machine, and the system provides joints between the existing and additionally cast concrete parts. Other researchers focused on post-tensioning of concrete using FRP elements; for example, Lee et al. [16] and Jung et al. [17] presented a post-tensioned FRP near-surface mounted system for strengthening of existing structures without changing its dimensions. The strengthening effect was investigated both experimentally and numerically. Aravinthan and Heidt [18] studied innovative methods for strengthening of bridge headstocks using post-tensioned fibre composite wraps as an alternative to steel prestressing tendons. Some scientists deal with the comparison of prestressing methods using steel tendons or FRP elements; for example, Choi [19] examined effective stresses of concrete beams strengthened using CFRP and external prestressing tendons. The strengthening effect of external tendons was found to be significantly greater in comparison with CFRP. Also, RC beams strengthened with external tendons showed small difference between the analysis and experimental results compared to beams strengthened by the CFRP method.

However, none of the cited authors applied the post-tensioning method for strengthening the described U-shaped RC bridges. Researchers at the Brno University of Technology (Czech Republic) have developed the substitute cable duct method, whose structural design pushes the limitations of historical structure prestressing.

Basic structural arrangement of prestressing cables in beam bridge strengthening using the method of substitute cable ducts is shown in Figure 1. After a previous detailed diagnostics, usable spaces between reinforcement are determined and substitute cable ducts are drilled through the beams. The direction and distribution of ducts is intentionally selected so that the anchorage area could be created above or behind the bearing axis, and the distribution of saddles was selected at 1/5 to 1/4 from the theoretical support in compliance with the static calculation. Preparatory works for cables are finished by creating the saddles in such a manner that the radial forces of the cables are directed straight into the concrete of the retrofitted structure, and the complex and unclear transformation of forces is not performed. After prestressing, the anchoring areas are filled with concrete and the cables (monostrands) on the bottom side of the beams are covered with an additional concrete covering layer, or they are hidden in the reconstructed original covering layer. The suitability of the method was confirmed for both simple and continuous U-shaped bridges with span lengths from 8 to 25 m [20].

1.2. Cables in Substitute Ducts in Original Beams. Using the substitute cable duct method leads to a placement of post-tensioning cables and monostrands directly into the concrete of the original beams. The essential requirement of this method is a favourable distribution of the original main load-bearing reinforcement, which provides abundant space for suitable drilling of substitute ducts in the available spaces between the original reinforcements without its interruption, or with just a small decrease in strength, which can be included in the strengthening design calculations and which can be compensated by the post-tensioning effects. This requirement is met relatively often (in most cases resolved by post-tensioning, suitable spaces could be found between the original reinforcements), which is given by the design customs from the time of construction. Use of the substitute cable duct method then provides significant advantages:

(1) Through saddles, the cables lean directly on the concrete of the beams, and therefore, the radial effects of cables directly affect the original structure (practically in the vertical axis of the beams). Therefore, they do not have to be rather intricately transformed by weldments placed on beam sides, or with separately cast blocks with duct saddles.

(2) The saddles can be created very simply as steel sheets (strap steel) bent into the prescribed radius of 1.2 m to 1.5 m, which are mounted into high-strength microconcrete with a full-area anchored saddle.

(3) The prestressing reinforcement (cables composed of monostrands) is completely protected against mechanical damage after subsequent filling of ducts with injection. If this protection is further complemented with additionally anchored cable sheathing in a straight section between saddles on the bottom surface of beams, then the entire prestressing set is hidden in the original concrete and in the newly constructed cover. Therefore, the requirements for perfect mechanical protection of the plastic sheaths of individual monostrands are met. If the stable conditions for primary and secondary protection of prestressing reinforcement are observed, long lifetime (long-term reliability) of this type of strengthening is guaranteed.

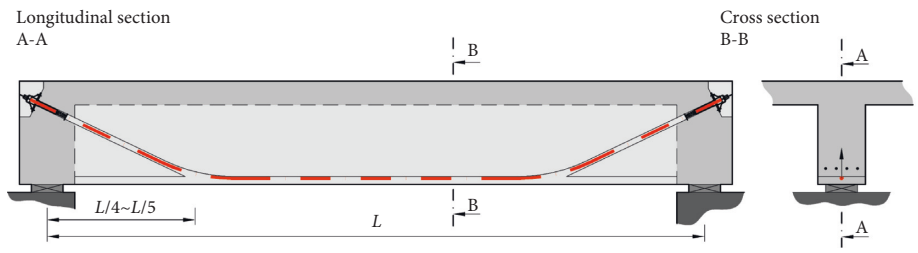

Figure 1: The basic scheme of cable arrangement in the case of strengthening a simple span bridge by post-tensioning using the substitute cable duct method.

Substitute cable ducts require drilling of holes into concrete and masonry in lengths multiple times longer than the commonly manufactured machines and tools allow. A special positioning drilling device—a drilling support—was designed and manufactured for this purpose. The main parts of the device are guiding bars and a drilling cart.

The cart allows defined clamping of drilling machines and a transfer of force for provision of the necessary drilling thrust. Together with the cart, the guiding bar allows prolongation of drilling shafts. This device (Figure 2) composed of the cart and the guiding bars provides machine guidance for the drilling machine and decreases strain of the operators of the drilling machine to an acceptable level. Secondly, it also increases the accuracy of drilled cable duct trajectory to the highest degree possible. Thirdly, it allows the operators to set a completely arbitrary trajectory because they can set any angle in both the horizontal plane and the vertical plane (usually an angle towards the longitudinal axis of the load-bearing structure). The drilling support can be axially equipped with both diamond and impact drilling technology, and these can be swapped even during the drilling of a single cable duct. Another advantage of the drilling support is that it can be attached to the retrofitted structure itself. Figure 3 shows a deployment of the drilling support with diamond drilling technique.

Both simple and continuous reinforced concrete beam structures can be strengthened using cables in substitute ducts. In the case of simple structures (usually simply supported beams), the ducts and prestressing reinforcements are arranged in accordance with Figure 1; in the case of continuous structures, they are arranged in accordance with Figure 4. Continuous structures can be efficiently tensioned with continuous raised cables, tensioned from both sides. In accordance with static requirements, these cables can be complemented with noncontinuous cables, anchored in a composite slab or in anchoring blocks (extensions), which will be placed between the original beams.

In monostrand prestressing, the coefficient of friction μ, which is used only in saddles in this distribution, has the value of 0.06 to 0.10, which was repeatedly verified during prestressing of structures strengthened in this manner by comparing the calculated and the achieved monostrand extension sizes. The friction does not apply in direct sections of cable trajectories (in such case, monostrands mostly lead almost linearly from saddle to saddle, through air and without friction).

Substitute cable ducts can be drilled into the structure very accurately and with very little damage to the original beam reinforcement. Site diagnostic of beam reinforcement, which provides information on the most suitable space for duct drilling, is necessary for drilling the cable duct. The designer defines the position of theoretical points (TP) only in the longitudinal direction, and they let the exact outlets of ducts in the transverse direction of the beams up to the construction process. In many cases, the concrete of the strengthened structure is more damaged by corrosion in the area of the bottom face of the beams that the concrete cover layer has already fallen off and the distribution of reinforcements is

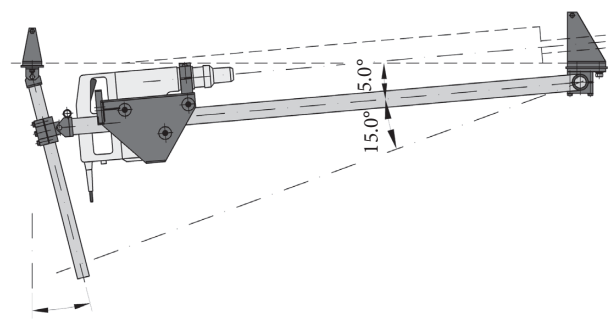

Figure 2: Scheme of the drilling support for drilling substitute cable ducts of relatively small diameters (ϕ = 35 ~ 52 mm) into the concrete of the existing bridge structure. It allows adjustment of both vertical and horizontal drilling angles. The picture shows a support fitted with a drill using the impact technology.

Figure 3: A realization of drilling substitute cable ducts on the bottom side of a U-shaped bridge using a drilling support [21]. The photo shows the use of invented drilling support equipped with a drilling machine with the diamond drilling technology. The drilling machine, clamped into a cart, is led by guiding bars in the required angle (both vertical and horizontal) relative to the bottom face of the structure while drilling a duct.

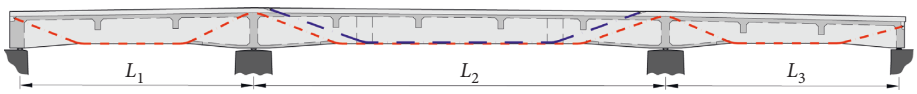

Figure 4: The basic scheme of cable arrangement in the case of strengthening a continuous span bridge by post-tensioning using the substitute cable duct method. Also, it is an example of the usage of multiple phases of post-tensioning. The first phase (on the picture described by red dashed lines) creates a possibility for casting an additional concrete composite slab for slab strengthening. The second phase (on the picture described by blue dashed lines) increases the overall load-bearing capacity of the critical middle span.

clearly visible. In other cases, in the area of future saddles, the original cover can be removed because after prestressing, the cables will be protected by the anchored cover and the surfaces of the entire structure are usually retrofitted with a special layer. Figure 5 shows an example of a duct outlet between beam reinforcements of a strengthened continuous beam structure in accordance with project documentation. It shows that suitable space could always have been found and that the substitute ducts could have been prepared without or with minimum damage to the original profiles of the main load-bearing reinforcement.

Figure 5: An example of a substitute cable duct (ϕ 52 mm) outlet at the bottom side of the beam in a suitable position in a gap between the existing reinforcement.

2. Strengthening of U-Shaped Bridges

U-shaped bridges have two main girders extending above the roadway, and the bridge deck is supported by cross girders. The cross girders connect both main girders, and together with them, they form a half-frame in the transverse direction; the half-frame provides spatial rigidity to the structure. These bridges can also be efficiently strengthened using the substitute cable duct method both in the longitudinal and transverse directions [22]. The spans of these structures are between 15 and 25 mm, and the described strengthening was used in the realized designs, e.g., [21, 23].

The main girders are usually reinforced with the original reinforcement in the amount of 8 to 12 pieces with ϕ of 35 to 50 mm in two or three rows. This provides enough space for substitute ducts. The main girders of U-shaped bridges are regularly strengthened with two to four cables with three to four monostrands in every cable. Similarly to main beams, the transverse girders can be strengthened with cables in substitute ducts anchored on side areas of main girders. Basic distribution of post-tensioning cables is shown in Figures 6 and 7.

U-shaped bridges, built between 1905 and 1930, are suitable structures for strengthening using the substitute cable duct method, which is given by the following structural particularities:

(1) Girder front sides are available for cable anchoring in the main girders (U-shaped). Cable lines can be designed with zero end eccentricity above the supports. The tensioning set can be best anchored in the center of gravity of girders, which contributes to high efficiency of post-tensioning and to a good distribution of forces in anchors into the concrete of the original girders.

(2) Completely free side areas of main girders are available for anchoring of transverse cables (cables strengthening the transverse beams). On the free side areas, the anchoring areas can be created either with cut bearing surface (older system) or in the form of cast concrete extension (currently used system, which guarantees both primary and secondary protection of the entire lengths of cables including anchors).

In the U-shaped girder, cables are led through space crossways with regard to both the horizontal and the vertical planes so that the anchors would act in the vicinity of the center of gravity of the end cross section (in the cross-sectional core). The location of cross girder anchors has to be selected carefully because the prestressing forces affect the transverse semiframe; the anchors have to be placed in the center of gravity of projection of the cross girder into the main beam or slightly below it. Then the additional set of forces will be balanced with regard to the semiframe, and it will not stress it adversely in the transverse direction.

Prestressing will efficiently create conditions for the additionally cast composite slab, which, in accordance with the requirements of the investor, strengthens the original bridge deck to as high a load as the U-shaped girders and cross girders can be strengthened.

Figure 6 shows the shape and arrangement of the prestressing system for strengthening the U-shaped bridge with a span length of $l = 16.4$ m on a secondary road for load-bearing class B in accordance with ČSN 73 6203 [24]. The main girders were sufficiently prestressed with four cables; cross girders were prestressed with two cables. Therefore, conditions have been created to carry the weight of an additionally cast composite slab, which strengthened the original bridge deck. This case is also an example of

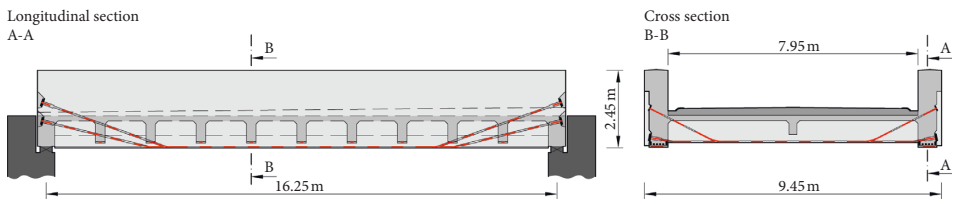

Figure 6: Cable arrangement in the longitudinal and transverse directions for strengthening of a U-shaped bridge with straight girders, built in Třebechovice in 1932, according to project documentation [21].

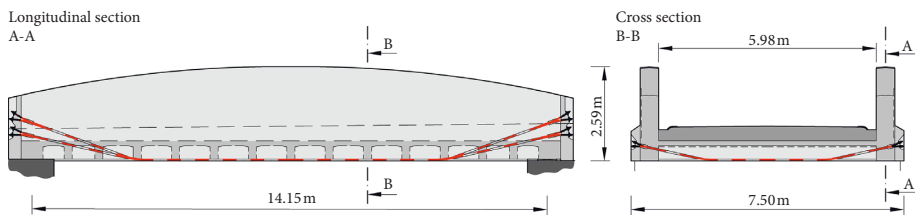

Figure 7: Another example of cable arrangement in the longitudinal and transverse directions for strengthening the U-shaped bridge with curved girders which was built in Vražné in 1928 according to project documentation [23].

anchoring using the single-strand wedge with bearing plates without observing the primary protection in anchors (older way). The secondary protection was guaranteed by the usual casting of anchor holes. Figures 8 and 9 show the characteristic details of this strengthening: cable saddles in U-shaped beams and the anchors at the end of these beams [21].

Figure 7 shows the shape and distribution of the prestressing system in strengthening of a U-shaped bridge with variable height of the main beam and a length span of l = 14.1 m on a tertiary road also to the load-bearing class B [24]. The main girders were post-tensioned with two cables of four monostrands, the cross girders were post-tensioned with one cable of monostrands. Once again, conditions to carry the weight of an additionally cast composite slab were created. However, this is an example of anchoring using the encapsulated anchor system with an observance of primary protection in anchors (newer, regularly used bridge anchoring system). The secondary protection was once again guaranteed by the usual casting of anchor areas in concrete. Figure 10 shows characteristic details of cable anchors in the main girder and the cross girder anchors at the sides of the main girder [23].

Strengthening of the U-shaped bridges with post-tensioning using the substitute cable duct system generally brings many advantages:

(1) In contrast to the glued reinforcement, which is activated only after load, and therefore does not contribute to the transfer of forces from the permanent load, transfer of prestressing into the structure balances a significant portion of internal forces created by the permanent load; this efficiently improves the condition, in which the structure is not stressed by live load and a necessary reserve is created for the transfer of effects of live load.

(2) The increase of load-bearing capacity by this method is significant, regularly 200%–300%, which is an effect, higher almost by an order than the use of glued reinforcement, for which general experience speaks on an achievable increase of approximately 30% [19].

(3) Cracks created by static or dynamic load in the tension flanges of reinforced concrete beams significantly accelerate the process of reinforced concrete corrosion significantly. The transfer of pressure forces by prestressing leads from a partial to a complete closure of cracks and a subsequent

Figure 8: An example of the anchorage areas made directly in the existing concrete of the main girders of U-shaped bridge. The strengthening was implemented in 2002, so the old type of anchors was used [21].

Figure 9: Prestressing tendons composed of individual monostrands (black HDPE sheaths) on the bottom side of the girder after curvature of their trajectories in saddles [21]. After the prestressing of tendons, the bottom side of the girder is provided with the anchored protective concrete cover layer (the second corrosion protection). The appearance and the concrete character of the bridge are then preserved.

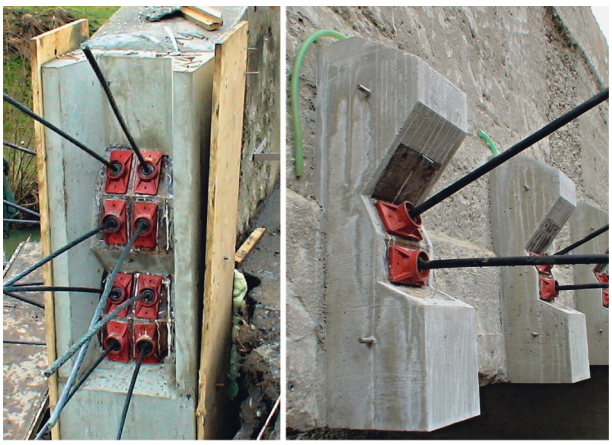

Figure 10: Realization of the additional anchorage areas of both main girders and cross girders. In this implementation, a new type of encapsulated single-strand anchors was used (2008). The anchors are covered and protected in concrete extensions [23].

prolongation of the concrete structure resistance against corrosion.

(4) Most construction works connected to this technology can be created without interruption of the traffic on the bridge or only with a partial limitation.

(5) When we strengthen bridges by prestressing, we use the entire prestress level interval. In the case of beam bridge strengthening, the interval usually achieves values of $\lambda = 0.15 \sim 0.25$ (in accordance with Bachmann [25]).

(6) For bridges seemingly irreparable due to their static condition, or if the requested load-bearing capacity cannot be achieved with other methods, and when the bridges are usually demolished and a new structure is built, the required parameters can be achieved using this very method of load-bearing capacity increase for a mere third or half of the price of the new structure [26].

The actual design and performance of strengthening must emphasize the fact that the static strengthening is usually a part of a total reconstruction and of retrofitting of the bridge. It must create prerequisites for reliability and durability of the selected design. That is why the below mentioned measures have to be considered and proposed:

(1) A thorough treatment of the degraded concrete of the entire bridge (surface areas including the plaster), first mechanically and then using a rotating high-pressure water jet.

(2) Careful cleaning of the exposed and corroded steel reinforcing bars in the entire bridge structure, first mechanically and then with a high-pressure water single-jet tool.

(3) Protection of the steel reinforcing bars with silicate materials.

(4) The actual post-tensioning of the bridge structure by both transfer of prestressing and by the composite slab.

(5) Application of the adhesion primer coat on the whole surface of the retrofitted concrete of the bridge.

(6) Rough and finish reprofiling of the bridge load-bearing structure.

(7) Application of a protective and unifying coating on the inner and upper areas of the U-shaped girders.

3. Static Effect of Prestressing Cables in Strengthening by Post-Tensioning

Static effect of prestressing cables, additionally built into the original reinforced concrete structures, is basically the same as the effect of a prestressing reinforcement in regular prestressed concrete [27]. This is achieved because the post-tensioned cables are built into the cross section of strengthened structures using the substitute cable ducts in a manner similar to the new, mostly fully prestressed structures. There are almost no differences in the service stage; in this case, radial effects of the additionally built-in prestressing set manifest themselves positively, while the favorable effect of the actual prestressing force manifests itself as well, but not so clearly. This is given by small, but sufficient prestressing degrees $\lambda = 0.12 \sim 0.25$ [25]. In the stage of ultimate limit state, the main difference lies in the fact that cables composed of monostrands appear to be free (without cohesion with concrete), even if built-in and injected in a cross section. However, the ultimate limit states increase as well by the very additional effect of prestressing forces, which transfer the former sections in pure bending to sections in eccentric compression [28].

3.1. Decrease of Dead Weight Effects. The basic static function of thus designed beam bridge strengthening is shown in Figure 11. It is depicted on a simple structure, and the used approach can be analogically extended to a continuous structure as well. The radial effect of additional

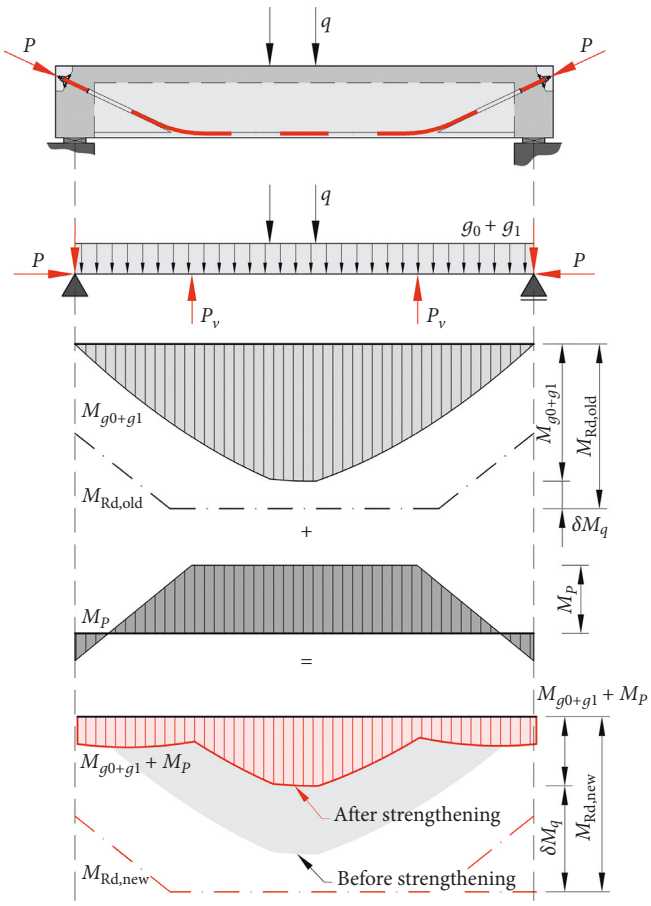

Figure 11: The basic scheme of prestressing static effect on the simple span bridge (reduction of dead load bending moments—application of LBM). Prestressing creates a much bigger reserve of bearing capacity which can be used for traffic load, and therefore, the load-bearing capacity is increased. The efficiency of this method is up to 300%.

cables leads to a decrease in the effect of the dead weight. Therefore, the LBM (load balancing method) is subsequently applied [27].

The beam bridge structure is loaded by its own weight g_0, other permanent load g_1 (long-term live load, the weight of all layers of the roadway with possible additional load by the raised and over-layered roadway), and live load q. The live load is usually determined as the load-bearing capacity of the bridge in accordance with the relevant technical standard before the beginning of the retrofitting preparations [29]. The load-bearing capacity of a bridge is defined here; it is determined by the following values: normal load-bearing capacity V_n, reserved load-bearing capacity V_r, and an exceptional load-bearing capacity V_e. In accordance with the respective technical standard, a bending moment of ultimate limit state can be determined for the critical sections of the structure (i.e., the limit, to which the section can be loaded in order not to exceed the maximum load on concrete and steel, set by the standard) [30].

Figure 11 shows which part of the bending moment of the ultimate limit state can be used for the moment of determining the load-bearing capacity of the bridge. The load decisive for the load-bearing capacity of the bridge before strengthening can cause the highest bending moment M_q, and its total effect is increased by the dynamic coefficient of a moving load δ. In accordance with calculations and studies of several dozens of beam bridges built between 1915 and 1950, the load-bearing capacities of the original bridges come out to be very low. Normal load-bearing capacities V_n are between 8 and 15 t, and reserved load-bearing capacities V_r usually constitute 15 to 30 t, expressed with regard to the moment of bending moment of ultimate limit state; 1/4 to 1/3 of a bending moment of an ultimate limit state of a section can be used for the load-bearing capacity. In the case of overfilled bridges, i.e., bridges, whose roadway was simply raised with other layers of asphalt concrete in the past, this number can be even lower, often 1/10 to 1/4 of the bending moment of ultimate limit state. We can often encounter paradoxic situations, in which the entire moment of ultimate limit state can be consumed by the weight of the bridge itself, or the limit can be even lower. In terms of calculations, such a structure cannot even carry its own weight. It is clear that a collapse will not occur because of the internal reserves in the materials and sections, but the structures exploited in this way then lack the safeties guaranteed by standards and even a regular traffic overloads them and all the related negatives ensue (sagging, cracks, and vibration). This leads to a decrease of lifetime of such overloaded structures.

As shown in Figure 11, bending moment effects of suitably designed post-tensioning efficiently decrease bending moments from permanent load. The following inverse proportion applies to the bending moment stress determining the load-bearing capacity of the bridge: the decrease of bending moment effects of permanent loads (g_0, g_1) caused by bending moments since prestressing M_P is inversely proportional to the portion of the total bending moment of the ultimate limit state which can be used. Even with a small level of prestressing, the bending moment gain of thus-strengthened structures is significant and many times larger portion of the bending moment of ultimate limit state than before strengthening can be used for the determining bending moments of the ultimate limit state after structure prestressing. It can be stated that

$$M_{\mathrm{Rd,new}} = (2\sim3)M_{\mathrm{Rd,old}}, \tag{1}$$

where $M_{\mathrm{Rd,new}}$ is the largest moment determining the load-bearing capacity for structures strengthened with prestressing, $M_{\mathrm{Rd,old}}$ is the largest moment determining load-bearing capacity on the original, nonprestressed structure.

If the usable moments $M_{\mathrm{Rd,new}}$ after strengthening are multiple times larger than moments $M_{\mathrm{Rd,old}}$ before strengthening, the load-bearing capacity of thus-strengthened beam bridges increases as well. The load-bearing capacity can commonly be increased by 200 to 300% in comparison with the original values before strengthening. Slab bridges were also strengthened, and in their case, 10 times higher normal load-bearing capacity values and 6 times higher reserved load-bearing capacity have been achieved.

3.2. Section Load-Bearing Capacity Increase. Axial component of prestressing force has a minor effect upon real section strengthening and therefore on the increase of the bending moment of the ultimate limit state. In accordance with Figure 12, the section originally in pure bending changes to a section in eccentric compression, which is accompanied by an expansion of the compressed area of concrete section x. This fact causes a minor increase in the bending moment of ultimate limit state in accordance with Figure 13.

Prior to strengthening, the bent bridge beam section is characterized by a pair of internal forces $N = 0$; $M = M_{\mathrm{Rd,old}}$. In accordance with the size of the moment M in effect, its current stress can be expressed only on the horizontal axis of the failure function π. After strengthening, stressing force P is transferred into the section. In accordance with the achieved degree of prestressing λ, any horizontal line in the marked area inside the failure function π applies to the strengthened section. The intersection of this line and the failure function π is given by the pair $N = P$; $M = M_{\mathrm{Rd,new}}$. The following statement must apply to every horizontal line in the marked area (thus for every nonzero P) on the basis of shape of the failure function π:

$$M_{\mathrm{Rd,new}} > M_{\mathrm{Rd,old}}, \tag{2}$$

where P is a prestressing force transferred by post-tensioning during strengthening, $M_{\mathrm{Rd,old}}$ is the section bending moment of ultimate limit state prior to strengthening, and $M_{\mathrm{Rd,new}}$ is the section bending moment of ultimate limit state after strengthening with prestressing force P.

Increase of height of the compressed area x of the strengthened section increased the ideal moment of inertia around the most stressed sections. Theoretically, this leads to a decrease in structure sagging (the structure becomes stiffer), which was also experimentally measured and confirmed (paragraphs 5.1 and 5.2 of this article). Attention should be paid to the fact that, for the used low levels of prestressing, the movement of the neutral axis is relatively small and the corresponding increase of the ideal moment of section inertia is only 10 to 15% in comparison with the original. We can never expect full prestressing of the sections. Their deformation behavior after strengthening is basically the same as before (crack openings occur again in the tensioned flange because of the other, nonbalanced portion of permanent loads and live loads), but their widths will decrease and sagging will slightly decrease because of the effect of the live loads.

It is clear that even in low levels of prestressing, the effects of beam bridge strengthening are significant. The load-bearing capacity values increase to multiples of the original values after strengthening. Even the mere decrease of influence of the dead weight of the structure (for example, by removing the overfilled layers of roadway), which also releases a part of the bending moment of ultimate limit state, can be surprisingly used very scarcely. The vertical alignment of the roadway is mostly the decisive factor because it is given by the connection before and after the bridge. Its decrease on the bridge causes large and therefore financially demanding modifications of long stretches of the road. Alongside the beam strengthening, the bridge deck often has to be strengthened as well so that it could withstand the wheel pressure of the cars. Additionally cast slabs, which can be efficiently designed to the very structure strengthened by prestressing, can be used for this purpose because the increase of the dead weight with an additionally cast slab can be eliminated by the very post-tensioning.

The intents to only increase the load-bearing capacity of a bridge with minimum costs because of the limited financial means are also frequent. In such cases, this is a very efficient method because all the layers of the original roadway can be kept on the structure. The fact that this strengthening can be performed under almost normal operation of the bridge with minimum demands upon traffic limitation is also worth mentioning. Substitute cable ducts as well as saddles are mostly created from the bottom part of the structure, usually with no interruption of operation of the bridge. The performance of the anchoring areas and prestressing can be performed gradually (one half of the bridge after another) because the character of post-tensioning using the subsequent cable duct method is structurally similar to the assembled structure.

3.3. Shear Forces Reduction. Similarly, the shear forces are efficiently reduced by prestressing. The reduction is depicted in Figure 14. The section above includes an example of a typical basic course of shear forces to permanent loads and a load corresponding with the V_n set. The middle section describes a course of shear forces from prestressing which has the opposite sign. The resulting reduced course of the shear forces is stated in the section below. The larger is the distance between the saddle and the support, the smaller is the angle of the cable against the axis of the beam and the smaller are the shear forces, which are able to reduce the original shear forces and which are affected by the prestressing cable. From the standpoint of the shear forces, it would be better to create saddles closer to the support; from the standpoint of bending moment, it would be better for the saddles to be as far away from the support as possible. Even though the specific design depends on many other factors of structures generally very diverse in terms of dimensions and composition, the results of as-yet designed and realized strengthenings lead to a discovery that the ideal distance for distribution of saddles in a length is in the interval from 1/5 to 1/4. This applies to both simple and continuous structures [31].

Structures with haunches require special attention. If the haunches are linear, then the beginnings of haunches mostly correspond to the abovementioned recommendation. In the substitute cable duct method, the saddles can be placed in the haunch ends. If the haunches are longer (for example, parabolic haunches often reach $l/3$), it is necessary to use separately cast blocks between beams and place those in the recommended spaces.

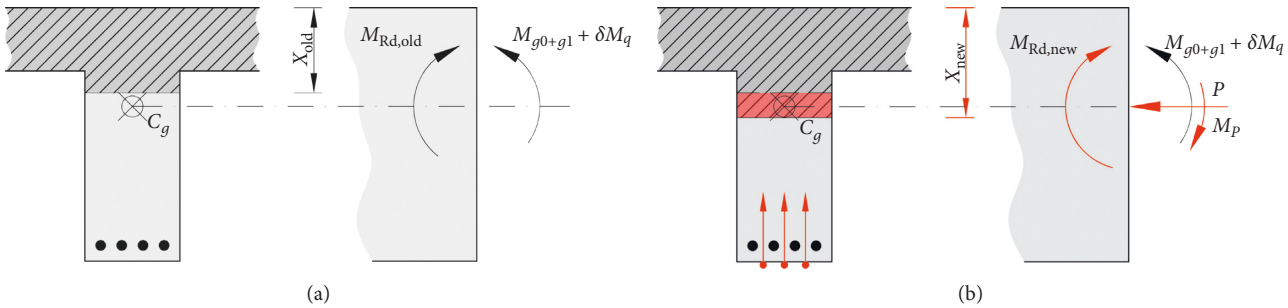

Figure 12: Expression of the prestressing effect on the beam structure cross section. The beam cross section and its internal forces (pure bending) (a) before and (b) after application of prestressing force. The cross section is now eccentrically in compression (a combination of bending moments and axial force), thus increasing the load-bearing capacity of the cross section.

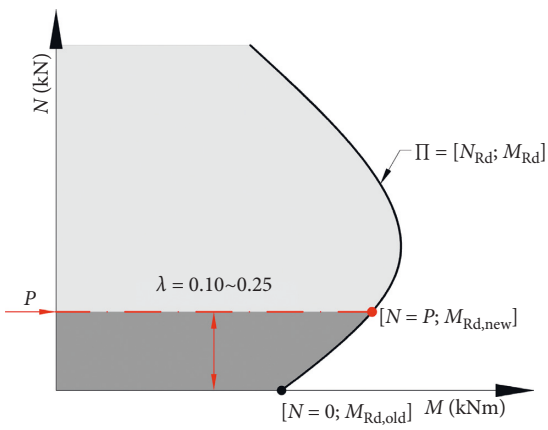

Figure 13: Increase of the load-bearing capacity of the cross section in the interval of partially prestressed concrete $\lambda = 0.12 \sim 0.25$ expressed by the interaction diagram (failure function π [25]).

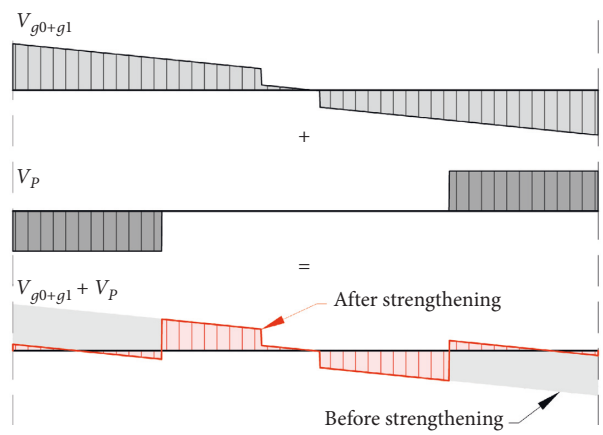

Figure 14: The basic scheme of reduction of shear forces due to the radial effects of prestressing cables in polygonal trajectory in the case of strengthening the simply supported beam according to Figure 11.

4. Diagnostics, Design, and Strengthening Performance Process

4.1. Diagnostics of the Current Bridge Structure. In the diagnostics for bridge strengthening, it is necessary to determine the following:

(i) Reinforcement of the current sections of beams, cross girders, and slabs in the center of their length, or above the supports of the continuous structure. It is necessary to determine the amount, diameter, and locations of the individual reinforcement profiles including spaces between them as the source data for decision whether the substitute cable duct method can be used.

(ii) Reinforcement of the current sections of beams, cross girders, and slab in supports. It is necessary to determine the amount, diameter, and locations of the individual reinforcing profiles in order to determine the number of raised shear reinforcement. The raised shear reinforcement (bent profiles) can be swung out from the vertical plane, and they can partially intersect with the trajectory of the substitute cable duct. That is why it is better to select those spaces between reinforcements which are not trimmed with bends. In bridge slabs, it is necessary to determine how much reinforcement is raised in the support; this usually constitutes 1/3 or 1/2 of the total amount of profiles.

(iii) Strength of the concrete of the load-bearing structure at least with nondestructive impact method (Schmidt) with specification using test core drilling. The NDT itself is not sufficient because, in older structures, it usually provides concrete strengths of one or two classes higher than the final ones after specification. The permissible stress of concrete under anchors has to be derived from the determined strengths. The concrete strength significantly codetermines the bending moment of ultimate limit state of the current section.

(iv) The concrete elastic modulus has to be determined if a verification of behavior of the bridge structure after strengthening with a stress test can be expected. In the case of historical bridge constructions, the modulus of elasticity varies depending on the possibilities of concrete production at that time and especially on the placing, processing, and compacting of the concrete mixture. In practice for

the design and calculations of strengthening, the concrete elastic modulus can be tentatively substituted with standard values or value derived from the elastic modulus, acquired from the speed of ultrasound penetration on concrete samples taken for the purpose of structural tests. It is important to keep in mind that the accurate modulus of elasticity estimation requires detailed approaches as the modulus of the elasticity value modifies as shown in [32]. However, even more important phenomenon than the variable modulus of elasticity is the uncertainty of the weakening of the cross section through cracks, but it is very difficult to determine that for historical structure [33].

(v) Using a probe drilled into the roadway, determine the thickness of roadway and all layers above the load-bearing structure. The determination of robustness of roadway layers has to be performed at least with probing drillings with suction, core drillings with core removal, performed with diamond drills, or with dug roadway probes using diamond drills. The roadway probe can be used to determine the exact thickness of the load-bearing structure (slab or bridge deck of the beam structure). In order to determine thickness, we can either use accurate leveling or (preferably) a probe drilling through the load-bearing structure. The determination of layers above the load-bearing structure is essential for determining the total dead weight $g_0 + g_1$.

(vi) The condition and functioning of bridge bearings. An important piece of information for the calculation of effects of the prestressing force and for the determination of the extent of the total repair of the bridge.

(vii) Geometrical dimensions (geometry) of the bridge structure. Determined as a part of diagnostics, or as an independent part of design preparation of bridge strengthening (retrofit).

4.2. Structural Design of Strengthening. In the structural design of strengthening, the prestressing force shall be determined as well as the location and amount of prestressing reinforcement with regard to the structural options, provided by the specific reinforcement and dimensions of the structure. The structural design can be performed roughly in accordance with the following items:

(1) Creation of a numerical model of the structure and an analysis of internal forces upon the current structure. Calculation of the load-bearing capacity of the current structure.

(2) Determination of stress of the concrete and the current reinforcement in the service stage with a determination of the ratio of dead weight upon the final material stressing, majority of reinforcement.

(3) Determination of the effect of designed prestressing (mostly by the equivalent set of forces from prestressing) [27], an analysis of internal forces on the numerical model using prestressing.

(4) Calculation and verification of the load-bearing capacity of the strengthened structure. If the first design of the prestressing set should not reach the intended values of load-bearing capacity, the procedure has to be repeated from the point 5 until it is reached.

(5) Verification of stresses during prestressing and in the service stage. If the stress assessment yields unsatisfactory results, the prestressing set has to be replaced (shapes and number of cables, prestressing design in phases in accordance with the retrofit progress) and the procedure has to be repeated again from point 4.

(6) Verification of ultimate limit states and service limit states of individual critical sections, inspection of deformations (possibly also widths of cracks).

For the construction analysis, it is sufficient to use mostly beam models, or possibly plate models and currently regular software using the FEM. From the geometric and physical standpoint, the analysis can be performed in the form of common linear calculations. This is given by the relatively small stresses, which are transferred into the original structures, and rigid, massive sections of the strengthened structures.

4.3. Structural Details of Strengthening. In beam structures with two beams in a cross section (U-shaped bridges), original reinforcements with ϕ of 50 to 60 mm are used, and correspondingly, there are larger spaces, through which the substitute cable ducts with ϕ of 52 mm for prestressing cables with three or four monostrands can be led. Figure 9 shows an example of a realized cable in accordance with [21].

Cross girders of the U-shaped bridges usually have to be prestressed with only one monostrand, or with two monostrands in the case of a span above 6 m.

On the basis of the designed prestressing reinforcement layout, the cable duct drilling scheme is processed (Figure 15) and all the necessary information are stated. These include the following:

(1) The location and distances of theoretical points (TP) for drilled ducts.

(2) The geometrical parameters (lengths, slopes in the vertical plane with regard to the horizontal plane, and in plan with regard to the axis of the beam (bridge, slab)).

(3) The design includes a definition of maximum deviations from theoretical axes prescribed for drilling. Actually, we can prescribe and achieve maximum deviations under one diameter of a cable duct on the length of the performed drilling or $\pm$ 30 mm on duct length.

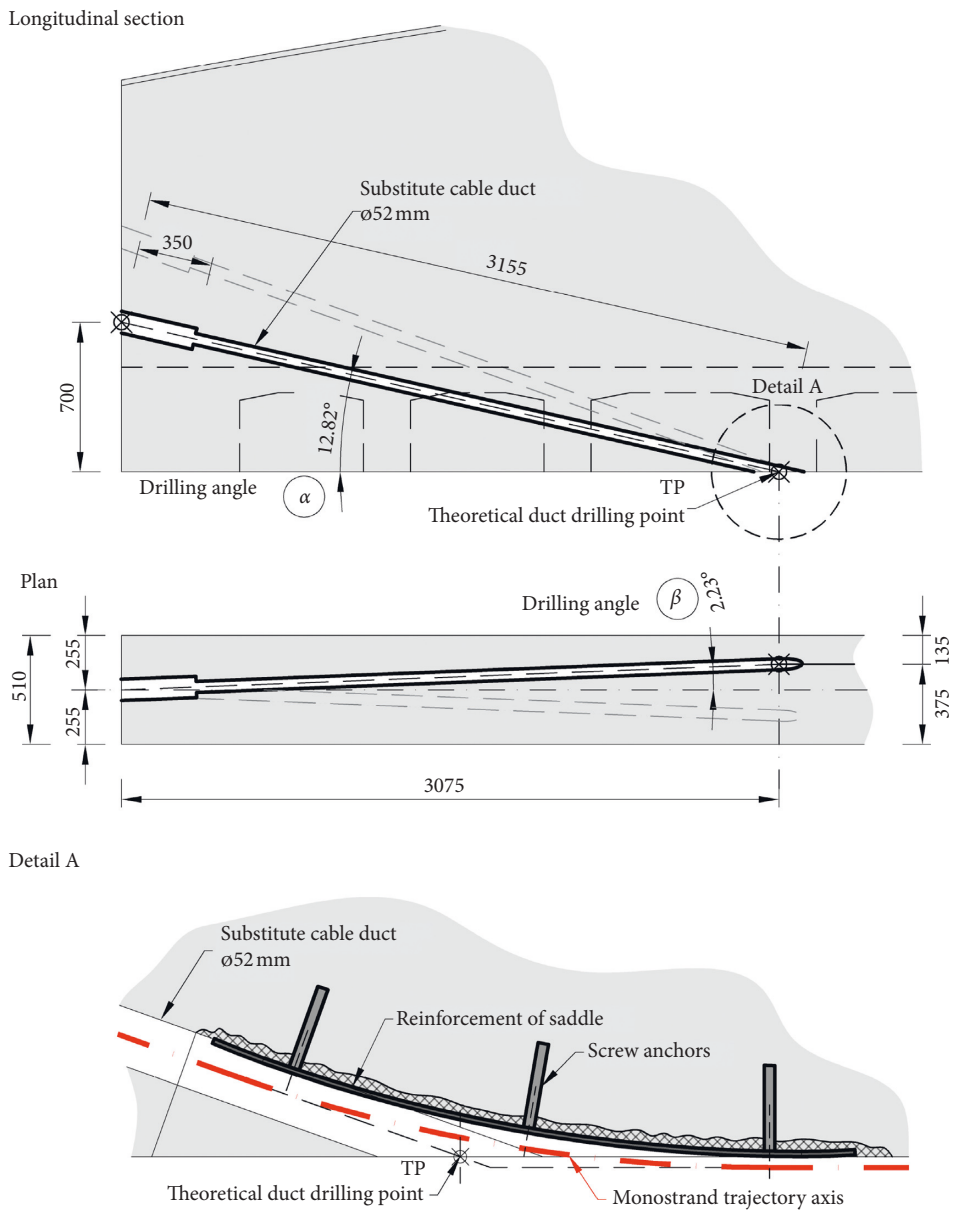

Figure 15: An example drilling scheme for drilling substitute cable ducts. It describes both the vertical (α) and horizontal (β) angles for drilling ducts. The details of the saddle are also shown.

The design of bridge strengthening must include a saddle (deviator) design (Figure 15) with the statement of all parameters necessary for performance and reinforcement of the saddle and for designing the anchoring areas. It is necessary to consider the feasibility of cutting bearing surfaces for anchor-bearing plates in the original concrete from the structural and spatial reasons (whether or not it is possible to perform planar cuts). Anchoring areas in regular beam and slab bridges can be cut from bridge deck above; in the case of U-shaped bridges with anchors placed in the front side of girders, the cutting can be performed from beam side areas. Unless the anchoring areas can be created in the original concrete of the retrofitted structure, they have to be designed as additional cast (concrete extensions). Anchoring using concrete extensions is suitable for the hiding of encapsulated anchors.

4.4. Preparatory Works for Structure Prestressing. The preparatory works stand for drilling of substitute cable ducts, construction of cable saddles, and preparation of the anchoring areas. In U-shaped bridges, preparatory works can be performed without almost any limitations to the traffic. This is a huge advantage of this technology, appreciated especially in traffic structures. In contrast, the alternative use of cast anchoring areas requires exclusion of the bridge operation (spatial reasons, vibrations caused by traffic, and their effect upon concrete hardening). The works can be

performed from revision scaffoldings built under the bridge, or from suspended work platforms, if the bridged-over obstacle is a river with high water level.

4.5. Structure Prestressing. After performing the structural details, the prestressing reinforcement can be passed through the ducts. Monostrands and the cables composed of them can be passed through the structure of regular lengths (up to 25 m) manually by pulling them into the ducts, or you can use a pulling head and pull the monostrand into the trajectory (of the duct) with a winch; if the winch is used, the pulling head has to be used as well. The head carries the plastic sheath of the monostrand with it and prevents its falling off from the steel monostrand itself. After pulling the prestressing reinforcement into the ducts, the proper cause of action is to attach the assembly to the strengthened structure. By attaching the assembly to the structure, dead lengths of the monostrand, through the duct is immediately followed by an attachment of steel-bearing plates and anchors.

Prestressing of the structure is usually performed with a hollow single-strand prestressing jacks. In accordance with the structural calculations, either we can prestress from one side (two cable bends are sufficient to cover this), or from both sides. Prestressing from both sides is usually suitable for three or more cable bends (occurs in continuous structures). In prestressing, it is necessary to measure the actual extension of the prestressing reinforcement and to compare the measured values to the theoretic (calculated) extension. The prestressing record shall form a part of the relevant project documentation. It is also recommended to measure the sagging of the structure during prestressing in order to determine a match between deformation behavior of the structure and the behavior of the structure, expected in the structural calculation.

4.6. Protection of the Prestressing Reinforcement and Its Parts. After prestressing the bridge structure, the strengthening process must be completed with a protection of the prestressing reinforcement. Its durability is only guaranteed if it is placed in a concrete section. This can be achieved with an additional covering or with a reprofiling of the original, usually unsafe cover with pieces falling off. In both cases, the covering layer of concrete (or retrofitting material) has to be reinforced and anchored to the structure. Mere cohesion based on the adhesion to the original concrete usually does not suffice because the surfaces of structures before retrofitting are usually damaged by water leaking and the related degradation of surface layers of the concrete, whose tensile strengths are too low.

Figure 16 shows a covering layer with reinforcement and anchoring to the structure. Reinforcement with a welded wire mesh with $\phi 6 \times \phi 6$ mm/100 × 100 mm is sufficient; the mesh limits cracking by shrinking of the thin added layer. M12 expanding screw anchors, fitted into holes with ϕ of 15 to 16 mm, are sufficient for anchoring to the structure. M12 screwed steel can be used in joining of anchors and cover reinforcement before the application of the reprofiling

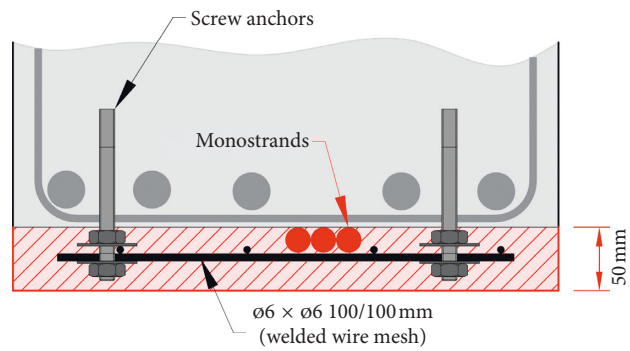

Figure 16: The arrangement of additionally anchored protective concrete covering layer (secondary corrosion protection of monostrands).

layers. Anchors glued from regular reinforcement with ϕ of 8 mm can be used into holes with ϕ of 10 mm. In this way, monostrands and their HDPE sheaths are protected from mechanical damage (random damage, for example, by floating objects, but even by an intentional vandalism) and the sheath also provides protection against heat to a certain degree (possibly even against open flame).

The protection of the anchoring areas can be designed by casting and bridge hydroisolation. As a matter of principle, it is necessary to recommend at least a structurally reinforced cover, which provides maximum protection against formation of cracks by shrinking the new concrete at the point of contact of the original and the new concrete. However, before casting and insulating, substitute cable ducts including passages through anchor wedges and jaws have to be injected. Epoxy sealant (older solution, not used any more), or, alternatively, a modified cement injection mortar, can be used for injection of ducts and anchors. The purpose of injection is to fill all additionally created spaces in the structure with injection material with passivating function against reinforcements (alkaline reaction) so that the water leaking into the structure could not enter the spaces and possibly condensate. In this case, the filling of spaces represents the function of secondary protection of the reinforcement, while the reinforcement sheath with passivating grease can be considered a primary protection of the reinforcement. The completely filled anchoring area (anchoring chambers) also have to be protected with a restored or newly created bridge hydroisolation. Even though no closer researches have been performed, under the condition of standard quality of work, this post-tensioning protective system on strengthened bridges can be considered sufficient for all intents and purposes. This statement was verified by retrofitting of bridges, e.g., [21, 23], in which no corrosion was observed.

In some cases, because of the technological possibilities of diamond cutting, the anchor cannot be embedded sufficiently deep into the original material of the structure so that it would be completely covered with concrete. In such cases, it can be protected with a reinforced concrete extension. The concrete extension reinforcement is connected to the bearing plate under the anchor with welded

joints and the concrete extension is therefore anchored by the prestressing force itself. Similarly, the concrete extension can be anchored into the original concrete with expanding screw anchors, but only if its surface quality is acceptable. It is necessary to emphasize that without concrete extension reinforcement anchoring, its durability is not guaranteed and concrete extensions cast in this manner are incorrect.

From the mid-1990s, encapsulated anchor systems were available for cables from monostrands, developed by world manufacturers of prestressing technology [34]. Anchor encapsulation is in fact its complete enclosing with exact plastic mouldings and a rubber transition piece from the monostrand to anchor body so that the technological water from the concrete could not penetrate to the anchor wedge and jaws. The anchor also consists of a plastic cover, which is attached to the anchor after prestressing (to the anchoring jaws and to monostrand ends) and which is filled with the same passivating grease which was used for the monostrand itself. In the direction towards the structure, the anchors are equipped with rubber haunches, which closely fit on the monostrands and which provide a waterproof coupling. These encapsulated anchoring systems were developed for prestressing of new monolithic structures with unbonded cables composed of two to four monostrands (base slabs, point-supported floor slabs, etc.). Its slightly profiled bearing surface area is usually cast in concrete mixture.

Encapsulated anchor systems represent another technological advancement in protection of monostrands against corrosion; currently, they are required for any bridge structure strengthening without exception. This is given by the increased corrosiveness of the environment surrounding the bridges. Encapsulated anchors with plane plates can be used the best in cast anchoring areas. Figure 17 shows finished concrete anchorage extensions of transverse cables after complete retrofit of the bridge. In the cut anchoring areas, they can be used after underlying the profile-bearing surface with a high-strength concrete (microconcrete, plastic mortar, etc.).

Figure 17: Protection of anchors using additionally cast concrete extensions. An aesthetic solution for anchoring the transverse cables of a U-shaped bridge [23].

5. Verification of Structure Strengthening by Measuring of Deformations

The static effect of beam bridge structure strengthening with post-tensioning can be verified by measuring of deformations during prestressing and by a load test before and after bridge strengthening.

Decrease of effects of dead weight with a radial set of forces of prestressing cables decreases the bending moment effects in a structure, which manifests by a decrease of deformations caused by the dead weight, which are measurable as a hogging (negative sagging) achieved in post-tensioning. In the case of simply supported structures, the decrease of internal forces, i.e., the bending moment stress, can be calculated using simple equations in accordance with the theory of elasticity, in which we have to calculate the sections damaged by cracks using their ideal section characteristics. Generally, the FEM beam models can be used.

The increase of deformation stiffness, created by an increase of ideal moments of inertia, post-tensioned by the structure, is relatively small. However, they can be proven by the very comparison of sagging of the nonstrengthened and strengthened structures, loaded with identical load at identical location. This can be achieved with a stress test performed with identical vehicles before and after post-tensioning of the structure.

During the verification tests (serviceability limit state), the phenomenon of variable elastic modulus is completely eliminated because the same loads are applied to the same structure in the same position. In terms of age of the historic structure and influencing of material characteristics by fatigue and seismicity, we load the structure during static tests at the same time.

Verification of post-tensioning effect can also be done by measuring the dynamic response before and after strengthening in comparison with numerical analyses. At present, the authors of the paper are using accelerometers to measure the dynamic features of bridges strengthened by the substitute cable duct method for determination of modification of the dynamic response due to post-tensioning effects as shown, e.g., [35]. This paper is primarily concerned with the static effect of post-tensioning, and the dynamic behavior of structures is investigated by the authors especially with respect to the verification of the durability of the reinforcing intervention and will be published afterwards.

5.1. U-Shaped Bridge Deformation during Prestressing (1932). A reinforced concrete bridge structure from 1932 has been selected for strengthening and total retrofit after years of operation of the tertiary road. After diagnostic investigation and static recalculation of low load-bearing capacity, the load-bearing structure manifested the following properties: for example, reserved $V_r = 12$ tonnes—road transport requirement (represented by the investor) was to increase the load-bearing capacity to class B (in accordance with [24]), i.e., to $V_r = 40$ tonnes [21].

The load-bearing structure with an effective span of 16.3 m was composed of two longitudinal (U-shaped, parapet) beams of 2.45 m high and 0.75 m wide, joined together with ten cross girders with dimensions of 0.65/0.30 m. The

cross girders were monolithically connected with reinforced concrete bearing slab with a thickness of 0.16 m. The concrete of the original load-bearing structure was of a varying quality, and in the calculation of statics, we could certainly take into consideration the C170 strength class (in compressed sections, strength class according to the current standard C12/15). The reinforcement consisted of C38 circular shapes with permissible stress values above 120 MPa for main load and with values above 140 MPa for total load. For the purpose of specification of the calculation, the slab reinforcement was uncovered even above supports, i.e., above cross girders, and the reinforcement of continuous bridge deck was stated even for negative moments. Strengthening of the bridge using prestressing cables composed of sheathed monostrands ϕLs15.7 mm was proposed on the basis of these diagnostic data. The main girders were strengthened with four three-strand cables, and cross girders were strengthened with a single three-strand cable and a single monostrand (Figure 6). The strands were placed partially in substitute cable ducts and partially leaned on the ceiling part of the girders [21].

The strengthening was structurally created by the substitute cable duct system and the prestressing cables were placed into the longitudinal supporting elements (parapets) and even into cross girders (Figure 18). The original bridge deck strengthening was designed in the form of the additionally cast composite slab from reinforced concrete. During the performance of the prestressing works, deformations (hogging) of main (parapet) girders and cross girders have been measured with induction displacement sensors with continuous computer recording during prestressing. The cables were tensioned gradually. First, the cables were tensioned alternately on both main girders. The prestressing of the main girders was followed by prestressing of cross girders in the direction from the center of the bridge span, also alternatively towards both supports. Tensioning forces for each monostrand constituted 192 kN with a period of stress of 3 minutes. The tensioning force was transferred gradually step by step, and the behavior of the structure was observed. The tensioning was performed with a single-strand electrically powered hydraulic jack for 10 hours. In case of all monostrands, the measured extensions fell into the designated tolerance of precalculated theoretical extensions [21].

Figure 19 shows hogging of the bridge (negative sagging) determined in accordance with the course of prestressing works. Between 0 and 6 hours, the cables were alternately prestressed on the main beams. It can be seen that girders have lifted alternately as well and that this phenomenon oscillated around a certain average value. After the termination of prestressing (6 hours after initiation), the negative sagging of both main girders differed only slightly (up to 10 %), and they have almost reached the values of theoretical immediate sagging from dead weight (calculated sagging of 5.0 mm on a grate numerical model; 4.2 mm negative sagging from prestressing). It is clear that the calculated static effect of strengthening (the reserved load-bearing capacity increased from 16 to 40 t) was accompanied with a positive deformational effect of prestressing. In this case, the use of the load balancing method [27] is graphically documented

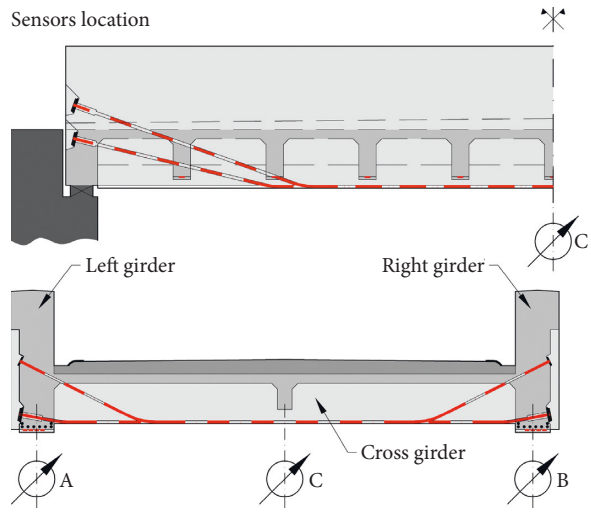

Figure 18: Location and description of deflection sensors in the longitudinal and transverse directions on the U-shaped bridge built in 1932 [21] for the purpose of the static load test.

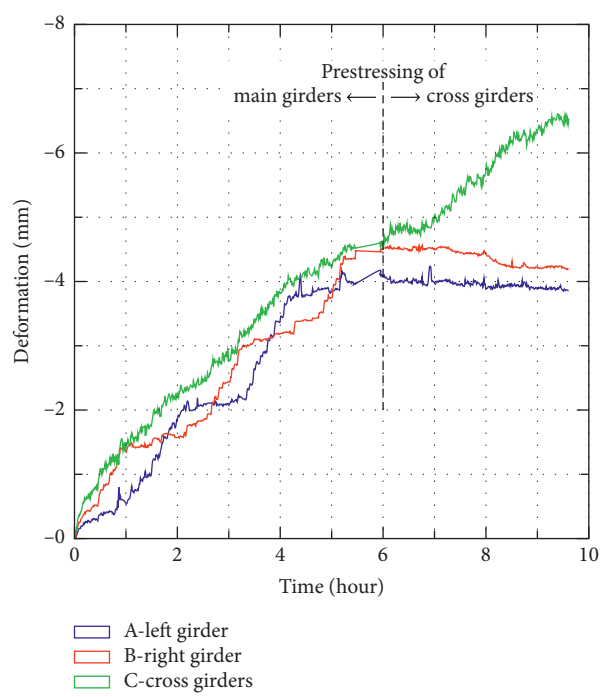

Figure 19: Measured deflections of the main girders and the cross girders during prestressing of the structure [21]. The graph shows the deformation effect of post-tensioning and documents an effective transfer of prestressing forces into the structure.

with a reduction of sagging from the structural dead weight of the structure by almost 85%.

During prestressing, the central cross girder as well as the girders deformed negatively. Because of the torsion of the main beams, the deformation of the central cross girder appeared even before the deformations of the main beams. The prestressing of cross girders was performed between 6 and 10 hours after initiation. Interestingly, the negative sagging of the central cross girder increased by practically the same value during prestressing of not only the central

cross girder itself but also all remaining cross girders. This was caused by the bridge deck grate rigidity and the rigidity in torsion of the main girders. The resulting negative sagging of the central cross girder in comparison with the main girders was measured at the value of 2.3 mm.

5.2. Deformation of a U-Shaped Bridge during Prestressing and a Load Test (1928). The structure in Figure 20 is a single-span U-shaped beam bridge built in 1928 with an effective span of 14.1 m (Figure 7) [23]. Two simple U-shaped (main) girders carry the bridge deck. The bridge deck consists of the grate from cross girders, which carry the bridge deck. The load-bearing structure was built from reinforced concrete. The roadway is overlayered. 100 to 130 mm of asphalt concrete lies on the original roadway layers on average, which significantly increases the dead load of the bridge. During the construction of a nearby highway, the roadway was increased by another 80 mm within roadway modifications. This led to a reduction of bridge traffic to one traffic lane with unsatisfactory load-bearing capacity—e.g., reserved V_r = 18 tonnes.

Bridge strengthening design proposed prestressing with unbonded prestressing cables to at least a load-bearing class B (V_r = 40 tonnes) in accordance with [24]. Main girders and cross girders were strengthened with unbonded prestressing cables laid in substitute (drilled) cable ducts and at the bottom surface of the beams. The overlayered bridge deck was sufficient for the loadbearing class B. The strengthening was performed under regular operation (after reduction to one traffic lane through the center of the bridge) [23].

Four-strand cables in main beams and two-strand cables in cross girders were used for strengthening of the bridge; these cables are composed of monostrands, which are lead in the polygonal trajectory and which were tensioned from both sides. The cables pass through the concrete of the beams via substitute cable ducts in spaces between the original reinforcement. The cables were anchored in the anchoring areas with the single-strand enclosed anchoring system. The spaces above and below anchors were cast in high-strength microconcrete. On the bottom face of beams and cross girders, the cables were protected with reconstructed anchored and reinforced concrete cover layer [23].

Monostrand ϕLs15.7/20 mm1600/1800 MPa (manufactured by Austria DRAHT) prestressing sheathed tendons have been used for prestressing. The monostrands were tensioned to 196 kN with a period of stress of 5 minutes. Single-strand prestressing jacks with a maximum power of 200 kN were used for tensioning. First, the monostrands were tensioned from one side, and then from the other side, once again with a period of stress of 5 minutes. The tensioning started with the outer of the four monostrands in the deviator and ended with the central monostrand. The course of tensioning was set so that the transfer of prestressing forces into main girders and cross girders would be as balanced as possible. At first, cable No. 1 in both main girders were tensioned simultaneously (with a synchronized pair of single-strand tensioning sets), followed by cable No. 2 in the main girders and later by cable No. 3 in cross girders, following the course from the central cross girder symmetrically to both supports of the bridge (Figure 7).

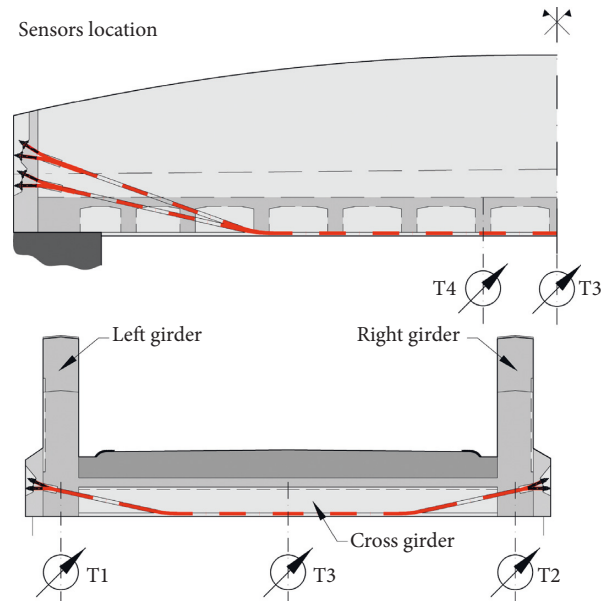

Figure 20: Location and description of deflection sensors in the longitudinal and transverse directions on the U-shaped bridge built in 1928 [23] for the purpose of a static load test.

The static effect of tensioning was monitored by the load test before strengthening, by measuring the hogging of the structure during prestressing, and by the load test after strengthening. The measurings were performed in the following manner:

(1) Test before strengthening: before strengthening, a load test was performed using two vehicles in the most efficient position so that the structure sagging before strengthening could be determined (Figure 21). The following sagging was measured using a strain gauge: sagging of the right main girder at T1, sagging of the left main girder at T2, and sagging of two central cross girders (Nos. 9 and 8) at T3 and T4.

(2) Deformations during prestressing: during the actual strengthening of the bridge during prestressing, negative sagging (structural raising), achieved by the unbonded cables in the main girders and cross girders, was measured at the aforementioned points.

(3) Test after strengthening with unbonded cables: after strengthening, a load test was once again performed using two identical vehicles in the most efficient location so that the sagging of the structure after strengthening could be determined in the same location in which the sagging was measured before strengthening (Figure 21). The measuring was once again performed by monitoring locations measured during the test before strengthening.

The monitored locations are stated in Figure 20. Figure 21 documents the positions of the test vehicles during the load test performed after strengthening. Figures 22 and 23

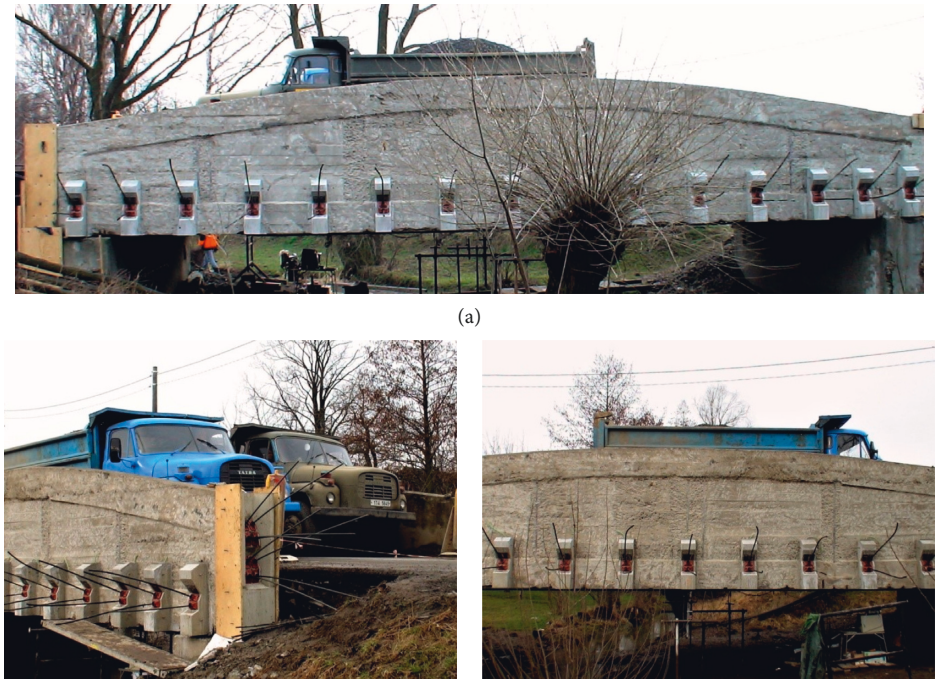

(a) (b) (c)

Figure 21: Static load test of the U-shaped bridge built in 1928 after strengthening [23]. The position of heavy vehicles (vehicles front and rear axles) in the longitudinal and transverse directions is described on the pictures.

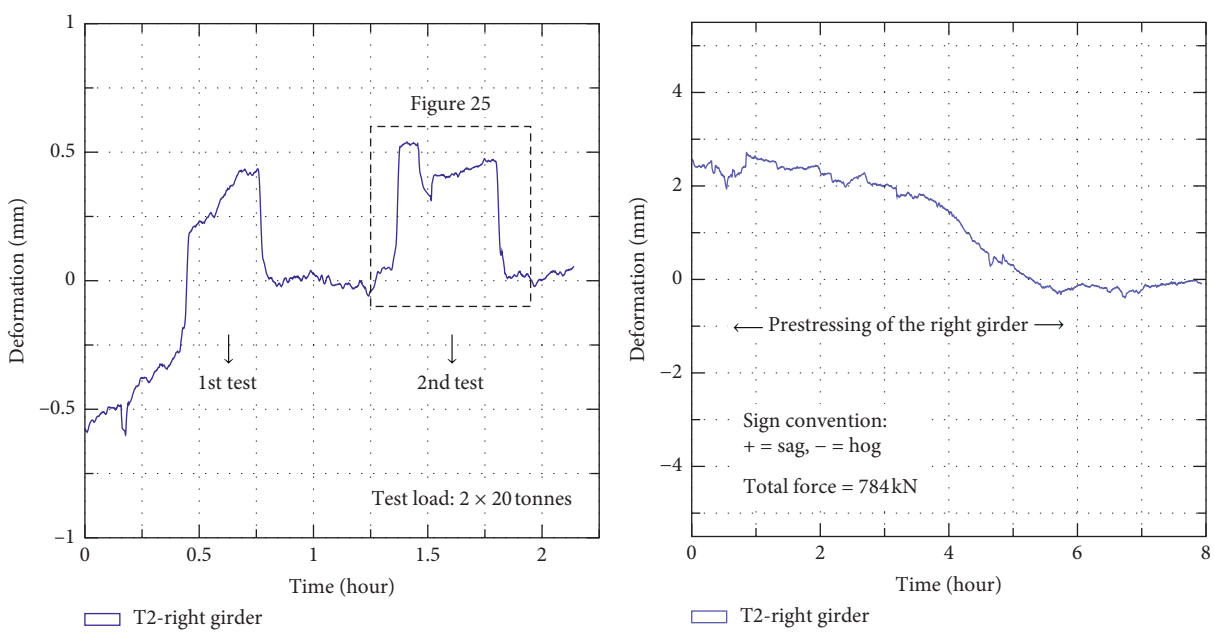

(a) (b)

Figure 22: Continued.

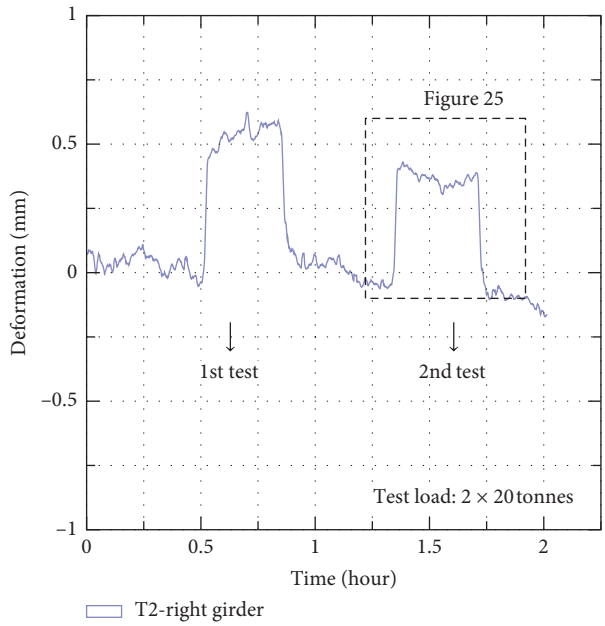

(c)

Figure 22: Graphs of the right girder (see sensor T2 in Figure 20) deflections (a) before strengthening (static load test with two load cases—heavy vehicles), (b) during prestressing, and (c) after strengthening (static load test with an identical load before strengthening).

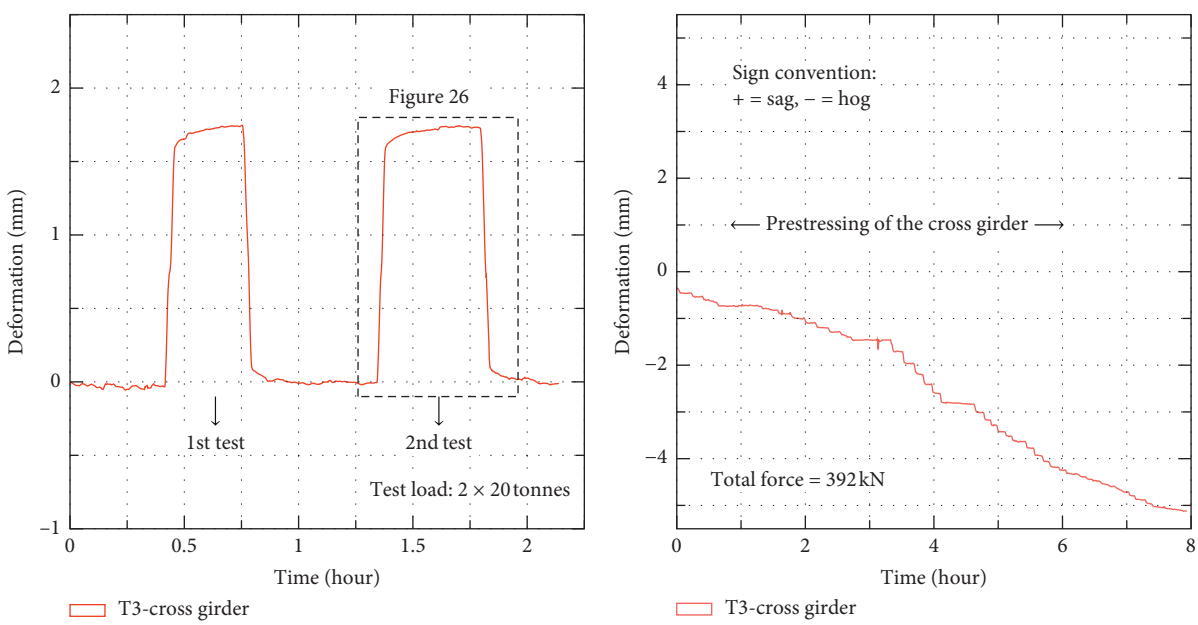

(a) (b)

Figure 23: Continued.

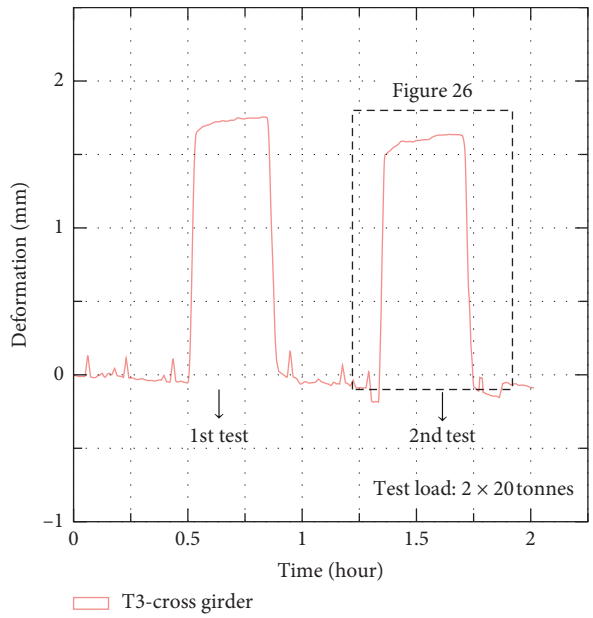

(c)

Figure 23: Graphs of cross girder (see sensor T3 in Figure 20) deflections (a) before strengthening (static load test with two load cases—heavy vehicles), (b) during prestressing, and (c) after strengthening (static load test with exact the same loading like before strengthening).

show examples from an extensive set of measured saggings and hoggings during prestressing and during the load test using the two test vehicles [23].

Within the evaluation of the strengthening effect, the measured values were averaged. The summary of the resulting values is stated in Figure 24. On the basis of the measured data, strengthening of the load-bearing elements of the U-shaped bridge can be evaluated as follows:

(1) Main girders strengthening: the change of internal forces, which led to an increase of load-bearing capacity of the main girders, and therefore the entire bridge, will manifest itself in the hogging of the main girders and in the ratio of the measured sagging before and after strengthening. During prestressing, the main girders have hogged (bent upward) by 2.4 mm. In the absolute value, this value is a 4.6x higher positive deformation effect than the effect caused by two Tatra vehicles weighing 2 × 22 t. This proves the high efficiency of the performed strengthening.

(i) After strengthening, the measured sagging of the main girders loaded by identical vehicles has decreased to 86% of sagging before strengthening (Figure 25). This proves the reinforcement of the main girders achieved by the performed strengthening. This is the proof of increase of deformation stiffness of main girders, even if at a low level of prestressing ($\lambda = 0.14$) [25].

(2) Cross girder strengthening: the change in internal forces has also manifested itself in the ratio of measured sagging before and after cross girder strengthening. The cross girders hogged (bent upwards) by 3.0 mm during the prestressing. In the absolute value, this value is a 2.4x higher positive deformation effect than the effect caused by two Tatra vehicles weighing 2 × 22 t. This is also an example of the high static efficiency of the performed strengthening.

Deflections of the U-shaped bridge structure (mm)				
Part of the structure	Before strengthening	During strengthening	After strengthening	Ratio of average deflections after/before strengthening
Main girder **T1**	0.50	−2.60	−0.47	**0.86**
Main girder **T2**	0.54	−2.20	−0.43	
Cross girder **T3**	1.75	−5.60	1.50	**0.91**
Cross girder **T4**	1.78	−5.20	1.70	

Figure 24: Assessment of deflections before and after the strengthening of the U-shaped bridge in Vražné, built in 1928 [23]. Note: downwards +; upwards −.

After strengthening, the measured sagging of the cross girders loaded by identical vehicles has decreased to 91% of sagging before strengthening (Figure 26). This once again proves the cross girder reinforcement achieved by the performed strengthening. This is the proof of increase of deformation stiffness of cross girders, even if at a low level of prestressing ($\lambda = 0.12$) [25].

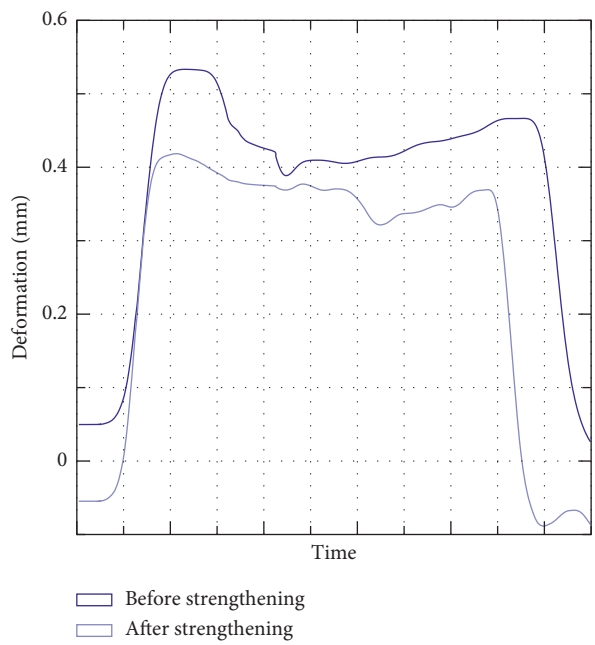

Figure 25: A comparison of the measured deflections of the main girder before and after the strengthening with the same test vehicles in the same position on the U-shaped bridge built in Vražné in 1928 [23].

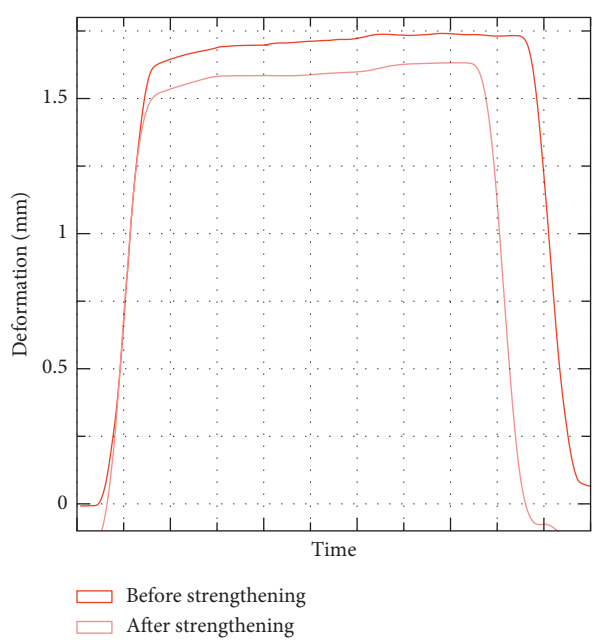

Figure 26: A comparison of the measured deflections of the cross girder before and after the strengthening with the same test vehicles in the same position on the U-shaped bridge built in Vražné in 1928 [23].

6. Recommendations for Design and Performance of Strengthening by Post-Tensioning

On the basis of already designed and realized structures and on the basis of measurements performed during prestressing and subsequently during structure loading, the below mentioned recommendations regarding design and the actual performance of the post-tensioning using the substitute cable duct method can be provided.

6.1. Values for Prestressing Losses. If the cables used are composed of monostrands, the coefficient of friction decreases significantly. This is caused by the lower friction of the plastic protective sheaths and the metal components of the saddle and also by the greasing effect of the anticorrosive passivating filling between the monostrand wires and the protective sheath. The passivating filling contains grease or paraffin wax, which limits friction efficiently. Even though the standard documents state the value of the coefficient of friction in a bend to be 0.06 for cables composed in this way, during practical tests performed during tensioning of the strengthened bridges, the value of 0.10 was determined. This value can be recommended for this post-tensioning system, in which the monostrands individually lean on the saddle reinforcement [31].

Single-strand encapsulated anchor systems are used regularly in bridge strengthening (e.g., [34]). The anchoring is performed using self-locking three-jaw wedges in the conical opening of the anchor. During their use, their slipping was measured at 2.60 mm to 2.90 mm while tensioning with the maximum forces of 200 kN. In consideration of slipping losses, 3.0 mm can be considered a safe value. In such a small size, the slipping reach is not significant and the slipping usually disappears already around the location of the first saddle. This allows a design of continuous cables over three or even four span lengths of continuous structures. Tensioning from both sides is used for these cables (respectively, tensioning from one side of the cable, and after anchoring, the cable is tensioned from the previously nontensioned end), and in such case, friction losses remain acceptably low at the center of the cable (usually within 15%).

The losses caused by the elastic shortening of concrete losses are negligible. This is given by the low level of prestressing (average prestressing in the section achieves 1.5 to 3.0 MPa) and therefore also by the very small elastic deformation of the concrete and the entire structure during prestressing. Because the number of tensioned cables is not large, repeated tensioning of already anchored monostrands can completely exclude this loss even in cases in which the exclusion is not advisable. Relaxation losses can be determined the same in a new structure as from prestressed concrete. In regular cases, in which low relaxation monostrands are used almost exclusively, the losses can be disregarded [27].

Losses caused by concrete shrinking can be completely disregarded because during strengthening, the prestressing is being used on concrete structures 80 to 100 years old. Only in the case of strengthening of a combination of post-tensioning and an additionally cast composite slab, the load from prevented concrete shrinking of a new slab should be included in the calculation. Losses caused by concrete creeping can be disregarded in most cases as well. This is

caused by the low level of transferred prestressing and the decrease of compressive stress in the compressed area of the original sections, which is achieved by the very balancing of a part of permanent load of the structure. Alternatively, they can be quantified more specifically using creeping models used by separately developed computer programs for time-dependent analysis of concrete structure creeping [36].

6.2. Recommendations for Structural Details. As regards the saddle radii, we recommend observation of the minimum radius of $r = 1.2$ m and a creation of haunches on the steel strap with a minimum length of 150 mm and a radius of $r = r/4$. Regular sheet steel saddles can transfer radial forces from one to four monostrands without larger structural issues. The saddle shape should be adapted width-wise for the insertion into the cable duct. Saddle length should not be smaller than 400 mm (without haunches) for practical reasons so that it could even be mounted including the required tolerances. The same radii are applied to tube saddles. Tube saddles should be equipped with haunches in the shape of a hollow cone [31].

The diameters of drilled ducts are supposed to be as small as possible, e.g., ϕ of 35 mm is sufficient for single-strand cables and ϕ of 52 mm is sufficient for multistrand cables up to four monostrands. In beam structure strengthening, it is suitable to allow for weakening by interruption of one or two profiles of the original reinforcement in the static design. Cables with even larger number of monostrands are used rarely, and in such case, they must be placed outside of the section (e.g., [6, 9]). Deviations have to be prescribed for duct drilling and for saddle mounting, and the deviations must be fulfilled.

The design of additional concrete covers always has to include anchoring into the original structure. Anchoring with mere cohesion cannot be considered sufficient because of temperature changes of the cables, elastic sagging of the structure, etc. The covering layer also has to be reinforced with welded wire mesh so that the forces would be distributed from the anchors to the entire covering layer.

7. Conclusion

The described method is suitable for rehabilitation (increase of load-bearing capacity, reconstruction, and prolongation of durability) of reinforced concrete U-shaped bridges, which were built between 1905 and 1930 and the original structure of which almost renders other strengthening methods impossible. Efficiently, the main beams and cross girders can be strengthened, and in that manner, the increase of the dead weight connected to the use of a composite slab to strengthen the bridge deck can be balanced. The static strengthening is significant, and it is accompanied with increase of deformation stiffness, which was proven by the performed load tests. In the case of U-shaped bridges, there is no other option to effectively improve their structural behavior without affecting appearances of these unique historical concrete structures.

The presented method of substitute cable ducts can also be used to strengthen other types of concrete bridges with different static schemes and cross-sectional shapes. It can be used for structural securing of the prestressed bridges and masonry vaults.

Data Availability

The data used to support the findings of this study are available from the corresponding author upon request.

Disclosure

This paper has been worked with the support of the program Competence of Technology Agency of the Czech Republic (TAČR) within the Centre for Effective and Sustainable Transport Infrastructure (CESTI), Project No. TE01020168. This paper has been created during the solution of Specific Junior Research FAST-J-19-5989 Analysis of verification static loading tests of reinforced concrete bridges strengthened by post-tensioning.

Conflicts of Interest

The authors declare that they have no conflicts of interest.

References

[1] N. Holth, "Michigan's unique concrete camelback bridges," 2019, https://historicbridges.org.

[2] Road and Motorway Directorate of the Czech Republic, *Statistical Overviews of the Bridge Database Information System*, Prague: Road and Motorway Directorate of the Czech Republic, Prague, Czech Republic, 2018.

[3] Austrian Ministry of Railways Bridge Standard, *New Bridge Standard: Technical Standard*, Wien: Austrian Ministry of Railways Bridge Standard, Wien, Austria, 1904.

[4] Czech Office for Standards, *First Czechoslovakia Bridge Standard: Technical Standard*, Czech Office for Standards, Prague, Czech Republic, 1923.

[5] European Committee for Standardization (CEN), *Eurocode 1: Actions on Structures—Part 2: Traffic Loads on Bridges (EN 1991-2)*, European Technical Standard, European Committee for Standardization (CEN), Brussels, Belgium, 2003.

[6] A. Recupero, N. Spinella, P. Colajanni, and C. D. Scilipoti, "Increasing the capacity of existing bridges by using unbonded prestressing technology: a case study," *Advances in Civil Engineering*, vol. 2014, Article ID 840902, 10 pages, 2014.

[7] A. Recupero, N. Spinella, and C. D. Scilipoti, "Method for extending life of existing bridge: a case study," in *Proceedings of the 8th International Conference in the Low Carbon Era*, Dundee, Dundee, July 2012.

[8] J. Nilimaa, T. Blanksvärd, B. Täljsten, and L. Elfgren, "Unbonded transverse post-tensioning of a railway bridge in Haparanda, Sweden," *Journal of Bridge Engineering*, vol. 19, no. 3, Article ID 04013001, 2013.

[9] M. Petrangeli, G. Usai, and E. Zoppis, "Bridge repair by external prestress: the Gibe crossing in Ethiopia," *IABSE Symposium Report*, vol. 96, no. 8, pp. 10–19, 2009.

[10] A. Daly and W. Witarnawan, "A method for increasing the capacity of short and medium span bridges," in *Proceedings of the 10th REAAA Conference*, Tokyo, Japan, September 2000.

[11] A. Daly and W. Witarnawan, "Strengthening of bridge using external post-tensioning," in *Proceedings of the Conference of Eastern Asia Society for Transportation (EASTS 97)*, Seoul, Republic of Korea, October 1997.

[12] R. Woodward and A. Daly, *Design of Bridges with External Prestressing: Construction and Testing of a Model bridge*, TLR Report 392, TLR—Transport Research Laboratory, Berkshire, UK, 1999.

[13] L. Dai, L. Wang, M. Deng, B. Wu, R. W. Floyd, and J. Zhang, "Strengthening a 20-year-old post-tensioned concrete box beam with double-layer prestressed steel wire ropes," *Journal of Bridge Engineering*, vol. 23, no. 11, Article ID 05018009, 2018.

[14] A. Miyamoto, K. Tei, H. Nakamura, and J. W. Bull, "Behavior of prestressed beam strengthened with external tendons," *Journal of Structural Engineering*, vol. 126, no. 9, pp. 1033–1044, 2000.

[15] T. Mimoto, T. Sakaki, T. Mihara, and I. Yoshitake, "Strengthening system using post-tension tendon with an internal anchorage of concrete members," *Engineering Structures*, vol. 124, pp. 29–35, 2016.

[16] H. Lee, W. T. Jung, and W. Chung, "Post-tension near-surface mounted strengthening system for reinforced concrete beams with changes in concrete condition," *Composites Part B: Engineering*, vol. 161, pp. 514–529, 2019.

[17] W.-T. Jung, J.-S. Park, J.-Y. Kang, and H. B. Park, "Strengthening effect of prestressed near-surface-mounted CFRP tendon on reinforced concrete beam," *Advances in Materials Science and Engineering*, vol. 2018, Article ID 9210827, 18 pages, 2018.

[18] T. Aravinthan and T. Heidt, "Innovative strengthening technique using post-tensioned fibre composite wraps for bridge headstocks," *Australian Journal of Structural Engineering*, vol. 11, no. 2, pp. 117–128, 2010.

[19] J. Choi, "Comparative study of effective stresses of concrete beams strengthened using carbon-fibre-reinforced polymer and external prestressing tendons," *Structure and Infrastructure Engineering*, vol. 10, no. 6, pp. 753–766, 2014.

[20] L. Klusáček and A. Svoboda, "Strengthening of bridges by post-tensioning using monostrands in substituted cable ducts," *IOP Conference Series: Materials Science and Engineering*, vol. 236, Article ID 012057, 2017.

[21] L. Klusáček, *Rehabilitation Of U-Shaped Bridge n. 2992-2 in Třebechovice. Project Documentation*, Brno University of Technology, Brno, Czech Republic, 2002.

[22] A. Svoboda and L. Klusáček, "Possibility of increasing the load bearing capacity of parapet bridge structures," in *Proceedings of the 24th International Conference Concrete Days 2017 (Solid State Phenomena)*, vol. 272, pp. 319–324, Trans Tech Publications, Switzerland, November 2018.

[23] L. Klusáček, *Strengthening and Rehabilitation of U-Shaped Bridge n. 04732-2 in Vražné. Project Documentation*, Brno University of Technology, Brno, Czech Republic, 2008.

[24] Czech Office for Standards, ČSN 73 6203, *Traffic Loads on Bridges, Technical Standard*, Czech Office for Standards, Metrology and Testing, Prague, Czech Republic, 2010.

[25] H. Bachmann, "Design of partially prestressed concrete structures based on Swiss experiences," *PCI Journal*, vol. 29, no. 4, pp. 84–105, 1984.

[26] A. Svoboda and L. Klusáček, "Strengthening of reinforced concrete bridges by post-tensioning," in *Proceedings of the 12th International PhD Symposium in Civil Engineering*, pp. 923–930, Prague Czech Technical University in Prague, Prague, Czech Republic, August 2018.

[27] T.-Y. Lin and N. H. Burns, *Design of Prestressed Concrete Structures*, John Wiley & Sons, New York, USA, 3rd edition, 1981.

[28] O. Burdet and M. Badoux, "Comparison of internal and external prestressing for typical highway bridges," in *Proceedings of the 16th Congress of IABSE*, Lucerne, Switzerland, 2000.

[29] Czech Office for Standards, ČSN 73 6222, *Load Bearing Capacity of Road Bridges*, Technical Standard, Czech Office for Standards, Metrology and Testing, Prague, Czech Republic, 2013.

[30] European Committee for Standardization (CEN), *Eurocode 2: Design of Concrete Structures. Part 1-1: General Rules and Rules for Buildings (EN 1992-1-1)*, European Technical Standard, European Committee for Standardization (CEN), Brussels, Belgium, 2006.

[31] A. Svoboda and L. Klusáček, "Results of short-term experiments with monostrands in saddles with small radii," in *Proceedings of the 24th International Conference Concrete Days 2017 (Solid State Phenomena)*, vol. 272, pp. 147–153, Trans Tech Publications, Switzerland, November 2018.

[32] C. Chisari, C. Bedon, and C. Amadio, "Dynamic and static identification of base-isolated bridges using Genetic Algorithms," *Engineering Structures*, vol. 102, pp. 80–92, 2015.

[33] L. Wang, L. Dai, H. Bian, Y. Ma, and J. Zhang, "Concrete cracking prediction under combined prestress and strand corrosion," *Structure and Infrastructure Engineering*, vol. 15, no. 3, pp. 285–295, 2019.

[34] Freyssinet Prestressing: Technical Brochure—France: Soletanche Freyssinet Group, 2014, http://www.freyssinet.com.

[35] C. Bedon, E. Bergamo, M. Izzi, and S. Noè, "Prototyping and validation of MEMS accelerometers for structural health monitoring—the case study of the pietratagliata cable-stayed bridge," *Journal of Sensor and Actuator Networks*, vol. 7, no. 3, pp. 2224–2708, 2018.

[36] R. I. Gilbert and G. Ranzi, *Time-Dependent Behaviour of Concrete Structures*, Spon Press, Abingdon, Oxon, UK, 2011.