Hindawi
Advances in Materials Science and Engineering
Volume 2019, Article ID 9657617, 10 pages
https://doi.org/10.1155/2019/9657617

*Research Article*

# Shear Behavior of Hollow Concrete Block Masonry with Precast Concrete Anti-Shear Blocks

**Xinlei Yang**,[1,2] **Hanchen Wu**,[1] **Jianxin Zhang**,[1] **and Hailiang Wang**[1]

[1]*School of Civil Engineering, Tianjin Chengjian University, Tianjin 300384, China*
[2]*Tianjin Key Laboratory of Civil Buildings Protection and Reinforcement, Tianjin 300384, China*

Correspondence should be addressed to Xinlei Yang; yxl@tcu.edu.cn

Received 16 December 2018; Revised 18 March 2019; Accepted 27 March 2019; Published 24 April 2019

Academic Editor: Ivan Giorgio



In order to improve the shear behavior of hollow concrete block masonry, precast concrete anti-shear blocks were proposed to enhance the shear strength of hollow concrete block masonry. Four groups of hollow concrete block masonry triplets with precast concrete anti-shear blocks were tested under shear loading, and their behaviors were compared with a control group. The results show that as the height of precast concrete anti-shear blocks increases, the shear strength of the masonry increases. The maximum shear strength of masonry triplets with precast concrete anti-shear blocks was 234.48 percent higher than that of the control specimens. The shear strength of masonry triplets was mainly determined by the failure of hollow concrete block unit. The majority of specimens exhibited double shear failures; however, these failures showed characteristics of ductile failure to a certain extent. Based on the experimental results, a equation for calculating the shear strength of masonry with precast concrete anti-shear blocks was proposed.

## 1. Introduction

Masonry is one of the oldest forms of construction and has been widely utilized in both developed and developing countries due to ease of construction, availability of materials, relatively low cost of materials, and unskilled workers [1, 2]. There are many masonry materials, such as unfired clay bricks, fired clay bricks, concrete bricks, and hollow concrete blocks [3, 4]. Among these masonry materials, clay bricks are gradually abandoned, and hollow concrete blocks are used more and more widely due to technological advancements, environmental protection, and sustainable development. Hollow concrete blocks could offer the potential for energy savings, decreasing raw material usage, and reducing environmental impact. Therefore, hollow concrete blocks play an important role in the modern building industry [5].

Usually, masonry is considered as a composite structure consisting of block units and mortar and is strong in compression but weak in tension [6]. Under loading, the behavior of masonry is quite complex, which depends on the mechanical and geometrical characteristics of the units, the mortar, and the bond strength between units and mortar [7]. Mortar joints between block units play an important role in determining the behavior of masonry; however, the mortar joints are often considered to be planes of weakness [8, 9]. Masonry is generally adopted for wall construction as a gravity load-bearing system, while masonry walls are subjected to in-plane shear forces during seismic events [10]. A few of postearthquake field investigations showed that many masonry buildings were highly destroyed and damaged by the moderate and strong earthquakes due to the weak joints, resulting in many deaths and huge economic losses [11–17]. It is well known that unreinforced masonry (URM) buildings are the most vulnerable during an earthquake. Among the observed failure modes, the most common failure mode is sliding shear mode, which represents horizontal shearing through the bed joints of masonry. Hence, the shear strength and deformation ability of the block-mortar bed joint in masonry is critical for the in-plane shear behavior of masonry.

In order to enhance the in-plane shear behavior of masonry, confined masonry (CM) structures with horizontal and vertical RC-confining elements are widely used in seismically active regions in developing countries, especially in China, due to their satisfactory behavior. However, horizontal and vertical RC-confining elements have not been

widely used in rural areas of China owing to high cost and lack of skilled workers. How to find a simple and economical construction method to improve the shear strength of masonry is crucial to improve the seismic performance of masonry structures in rural areas of China.

According to the development status of rural China and the needs of rural housing construction, an extensive research program has been carried out in Tianjin Chengjian University. The purpose of this research program is to develop simple and effective structural measures to improve the hollow concrete block masonry structures without horizontal and vertical RC-confining elements. Then, precast concrete anti-shear blocks with different dimensions were proposed to enhance the shear strength of hollow concrete masonry. In this paper, a series of direct shear tests of block masonry triplets (with and without precast concrete anti-shear blocks) have been conducted to validate the effectiveness of the proposed structural strengthening solutions.

## 2. Experimental Program

*2.1. Preparation of Specimens.* Masonry triplets involved here comprised hollow concrete blocks and cement mortar. The size of the hollow concrete block units used in this research was 190 × 190 × 390 mm, and all the hollow concrete block units were manufactured by the same company. Hollow concrete block properties were determined according to GB/T 4111-2013 [18]. The average compressive strength of hollow concrete block units was approximately 7.8 MPa. Absorption, density, and net area were approximately 12%, 1,713 kg/m$^3$, and 40395 mm$^2$, respectively. Five units were tested for nominal compressive strength to verify their strength. The width, height, wall thickness, size of cells, etc., were verified for the masonry units according to the requirements of GB/T 4111-2013 [18]. The masonry units met the visual requirements as well as the specified tolerances of the Chinese codes.

Cement mortar consisting of cement (grade 42.5, ordinary Portland cement (OPC)) and natural river sand in the ratio 1 : 6 by weight was employed for masonry mortar. The Portland cement used in the experiment was the Chinese P.O. 42.5 grade, which contains 80–95% of cement clinker and gypsum. The physical properties of the Chinese P.O. 42.5 grade, provided by the suppliers, are as follows: the specific surface area ≥300 m$^2$/kg; initial setting time ≥45 min; final setting time ≤10 h; 3-day compressive strength ≥17 MPa; 28-day compressive strength ≥42.5 MPa; loss of ignition ≤5%; $SO_3 \leq 3.5\%$; and $MgO \leq 5\%$. The natural river sand was clean, typical fine sand found in Tianjin. The bulk unit weight of the sand was 1,598 kg/m$^3$. Potable water was used to mix the mortar. Material properties were determined by following the specifications of GB 175-2007 "Common Portland cement" [19] and GB/T 1346-2011 "Test methods for water requirement of normal consistency, setting time, and soundness of the Portland cement" [20]. Mortar properties were determined according to JGJ/T 70-2009 "Standard for test method of basic properties of construction mortar" [21]. The mean mortar compressive strength was approximately 8.2 MPa.

The strength grade of concrete used for precast concrete anti-shear blocks is C30, and the mean value of concrete compressive strength (cube) is 33.5 MPa. There are four kinds of precast concrete anti-shear blocks, which are named as PB-H/2 (Figure 1), PB-H/3 (Figure 2), PB-H/4 (Figure 3), PB-B/3 (Figure 4), respectively. "PB" stands for "precast concrete anti-shear block," "$H/i$" ($i = 1, 2, 3$) stands for the height of precast concrete anti-shear blocks, and $H$ is the height of hollow concrete blocks. The size of PB-H/2 was 135 mm × 115 mm × 200 mm, of PB-H/3 was 135 mm × 115 mm × 136 mm, of PB-H/4 was 135 mm × 115 mm × 104 mm, and of PB-B/3 was 135 mm × 40 mm × 200 mm. In the middle of each precast concrete anti-shear block, a steel rod with a diameter of 6 mm is set, whose two ends can be supported on the block webs for construction positioning, as shown in Figures 1–4.

*2.2. Construction of Triplets.* The experimental program consisted of 30 masonry triplets. Each masonry prism was assembled with three block units and a full-bed mortar joint that was struck flush. The mortar bedding thickness was approximately 10 mm, and a professional mason constructed all triplets. The skilled mason exerted extra care during construction of the masonry triplets to ensure that triplets were level and plumb. All phases of the construction of the triplets were followed as specified by the Chinese code GB/T 20129-2011 "Standard for test method of basic mechanics properties of masonry" [22]. Figure 5 shows masonry triplets for testing.

The masonry triplets are divided into 5 groups, and each of which has six test specimens. The notation CO is adopted for masonry triplets without precast concrete anti-shear blocks and used as a control group. The other four groups correspond to each of the four types of precast concrete anti-shear blocks mentioned above and have the same name as the corresponding anti-shear block. Figure 6 shows schematic diagram of five groups of specimens.

*2.3. Test Setup and Instrumentation.* Masonry triplets are adopted to evaluate the shear strength along the block-mortar bed joints of masonry. There are many testing schemes for the evaluation of the shear strength in masonry. According to the boundary conditions and loading configurations, proposed in the Chinese code GB/T 50129-2011 [23], the test setup and instrumentation, shown in Figure 7, is adopted during testing. In order to simulate the shear state at the mortar joint, the middle block was loaded at the top and the side blocks supported at the bottom. Six masonry triplets for each case were prepared to evaluate the shear strength of the masonry units. All masonry triplets were aged for 28 days prior to testing. The load was applied under displacement control at a rate of 0.1~0.15 mm/min. The applied load and displacement of the specimen are recorded automatically.

The main objective of this study is to assess the enhancement in shear strength and shear deformation ability of block-mortar joint due to precast concrete anti-shear blocks. Hence, the masonry triplet shear tests were

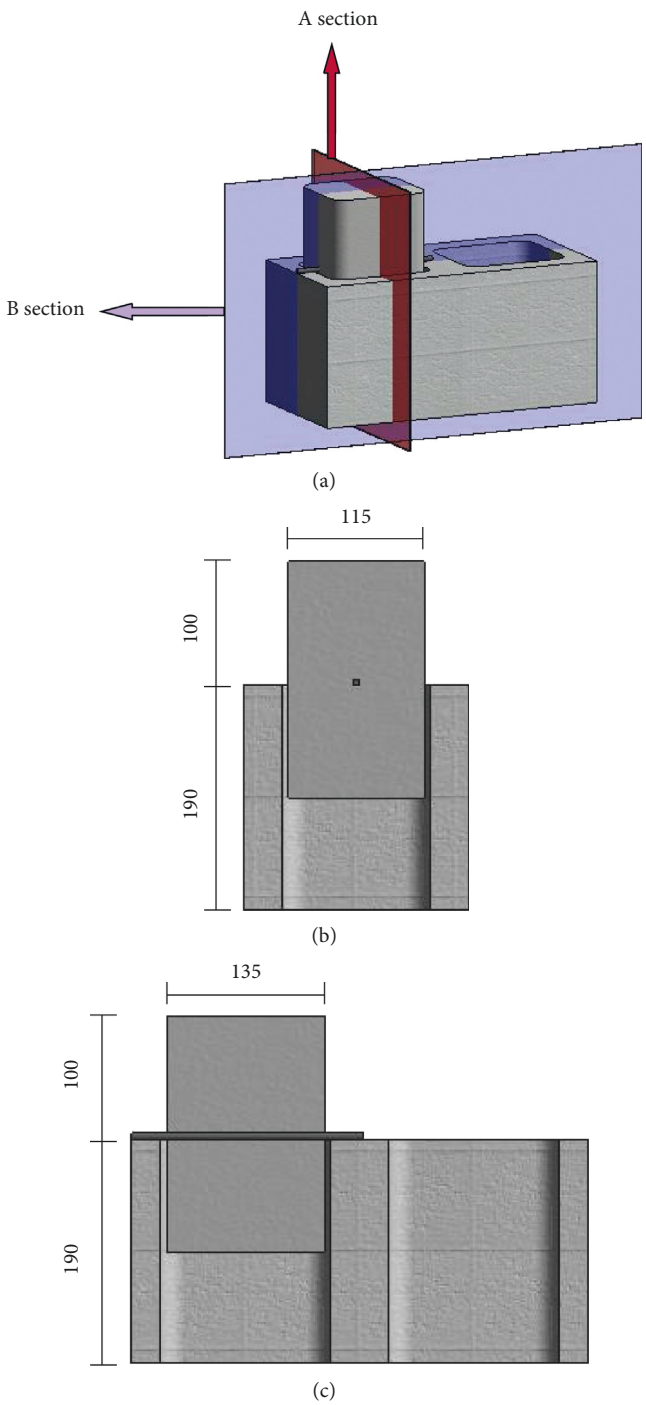


Figure 1: PB-H/2.

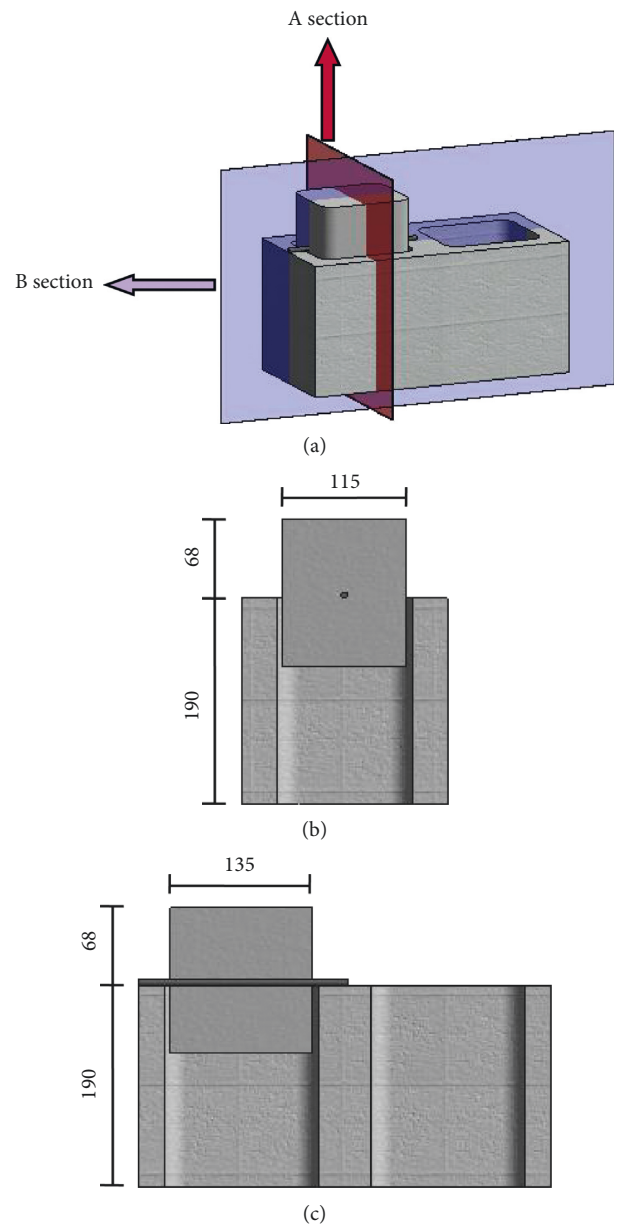


Figure 2: PB-H/3.

performed without axial precompression loads, and the masonry triplets were only subjected to loading parallel to the bed joint.

## 3. Experimental Results

*3.1. Damage Observations (Failure Pattern).* Six specimens of group CO (control triplets) experienced shear bond failures at block mortar interface, as shown in Figure 8. All block triplets that were constructed without precast concrete anti-shear blocks exhibited this failure type. And the shear strengths were governed by the block/mortar interface. When shear bond failure occurred, the bearing capacity was immediately lost, and the blocks themselves remained intact without any damage.

The other four groups of masonry triplets constructed with precast concrete anti-shear block exhibited different failure modes in comparison to control masonry triplets. The masonry triplets with precast concrete anti-shear blocks have two obvious failure characteristics. The first is the bond failure of mortar joint; the specimens could still remain intact and maintain a certain bearing capacity, as shown in Figure 9. The second is cracks occurring in the block shells and webs (Figure 10). Then, the bearing capacity decreased rapidly.

The failure of these specimens constructed with precast concrete anti-shear block indicated that the adjacent blocks

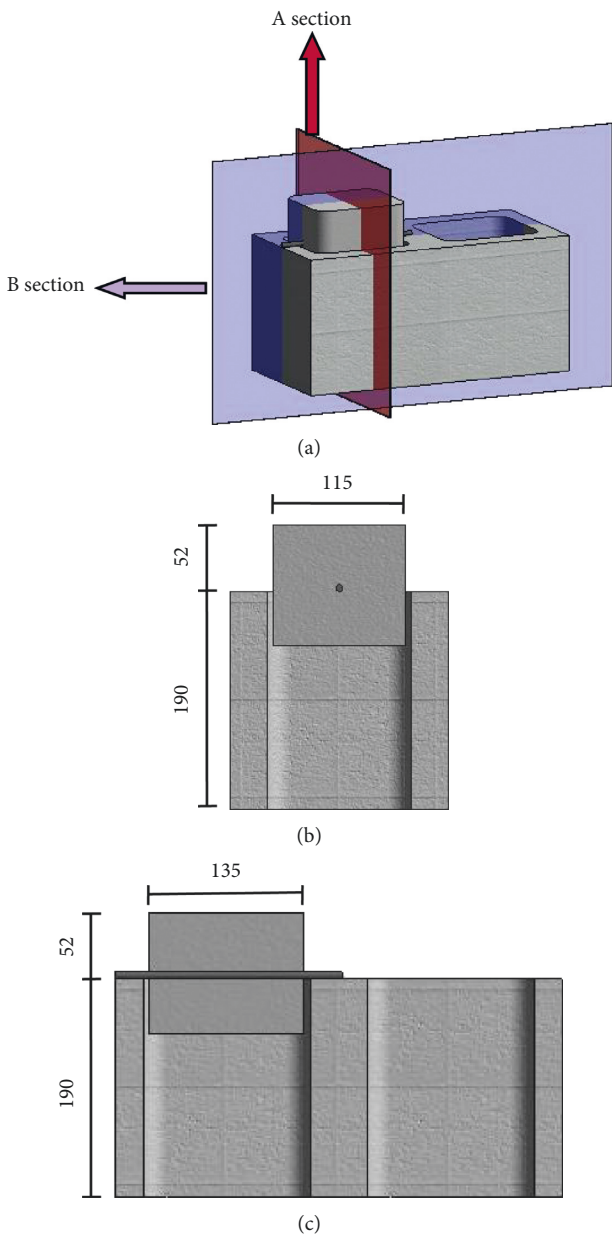


Figure 3: PB-H/4.

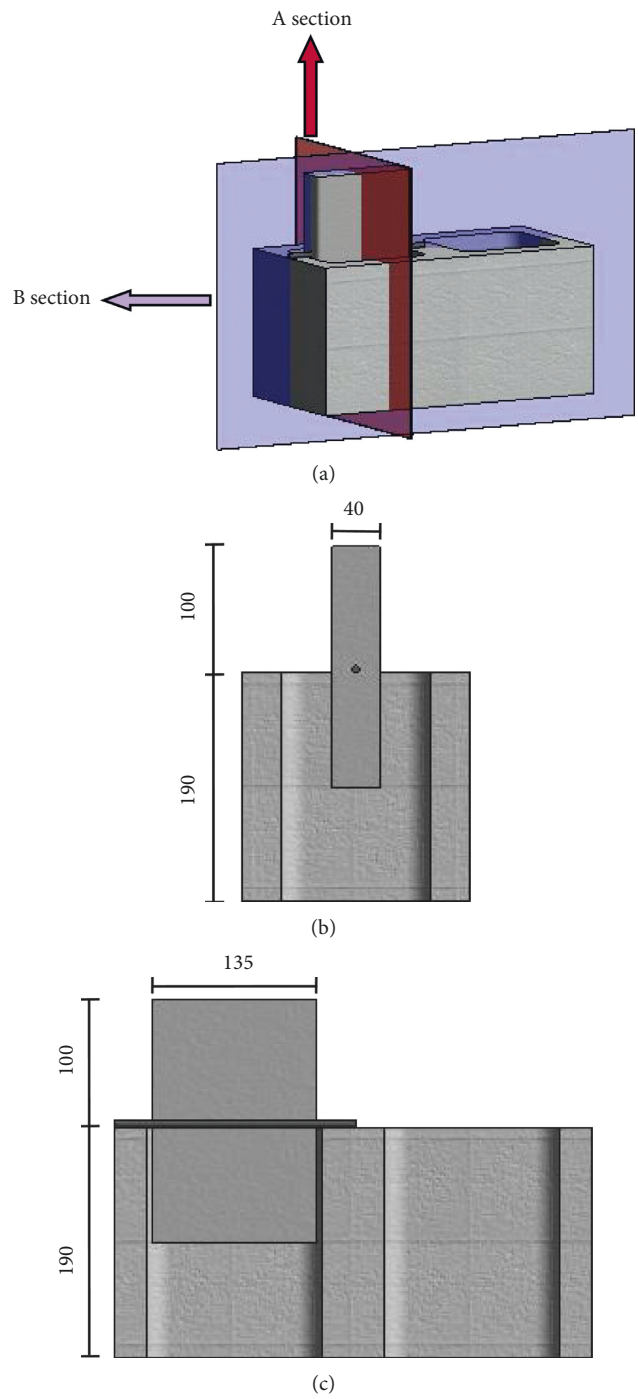


Figure 4: PB-B/3.

and precast concrete anti-shear blocks formed an interlocking action, the block shells and webs also participated in the shear transference between adjacent blocks due to the existence of precast concrete anti-shear blocks. The shear strength of the masonry triplets constructed with precast concrete anti-shear block was not controlled by the damage of the mortar layer, but by the cracks occurring in the block shells and webs. It was shown that the force transmission mechanism of the masonry triplets constructed with precast concrete anti-shear block was different from that of the contrast specimens.

*3.2. Load-Displacement Curves.* The load-displacement responses are the most important characteristic for assessing the behavior of tested specimens. The load versus displacement response of five groups of test specimens is presented in Figures 11–15, respectively.

Figure 11 shows the load-displacement response of group CO triplets (without precast concrete anti-shear blocks). It could be seen that the load-displacement curve of the specimens in group CO is basically linear. After reaching the peak load, the bearing capacity is suddenly completely lost, showing a typical brittle failure behavior. The record of postpeak response is very little, so not shown in Figure 11.

Figure 5: Photo of the specimens.

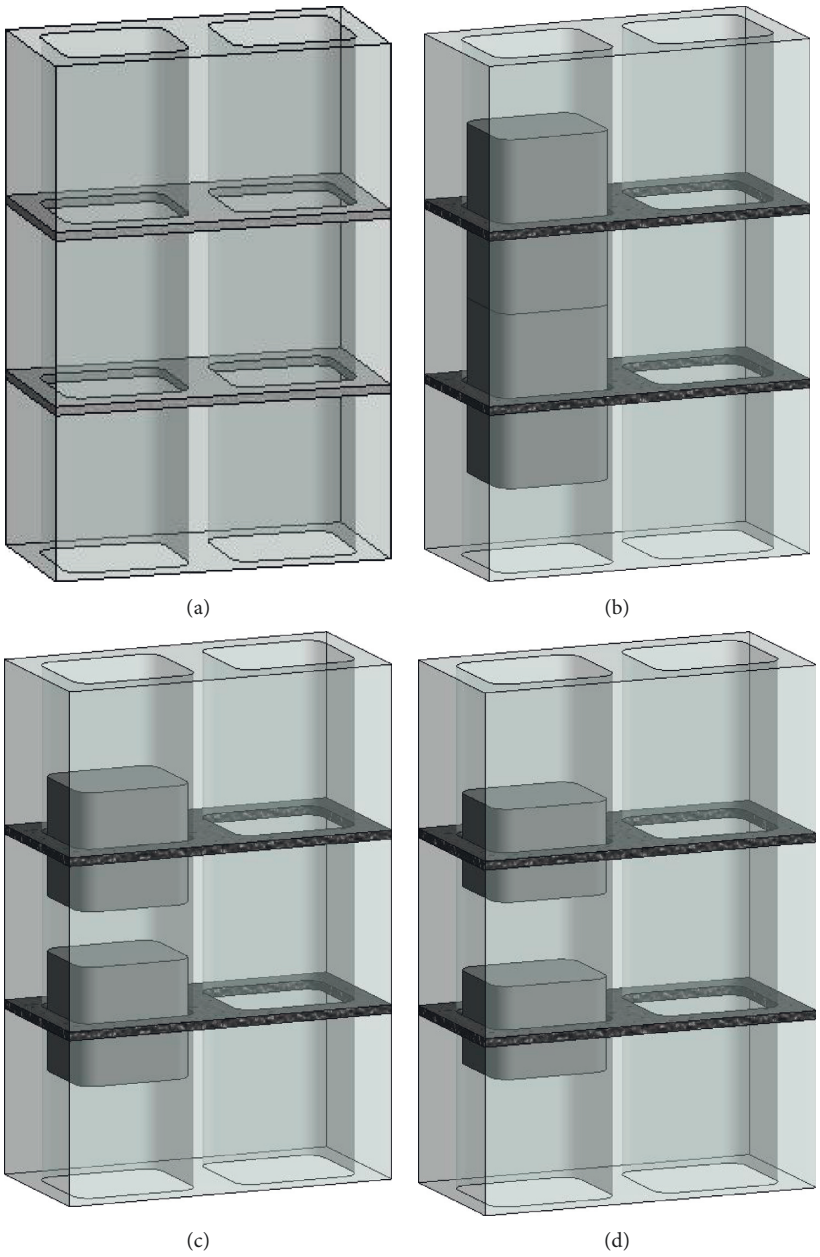


Figure 6: Continued.

(e)

Figure 6: Schematic diagram of five test groups. (a) Group CO. (b) Group PB-H/2. (c) Group PB-H/3. (d) Group PB-H/4. (e) Group PB-B/3.

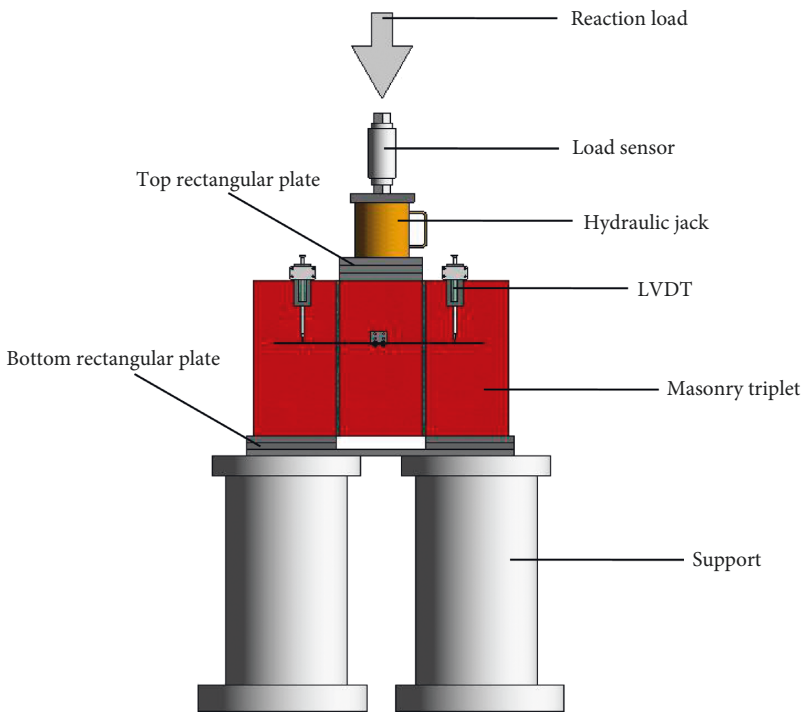


Figure 7: The arrangement of loading device and LVDT.

Masonry triplets constructed with precast concrete anti-shear blocks exhibited different load-displacement responses, as shown in Figures 12–15. The load-displacement curves of these four groups of specimens with precast concrete anti-shear blocks show two clear load peaks. The first load peak corresponds to the bond failure of the mortar joint. Then, sliding occurs between adjacent blocks, and the bearing capacity decreases gradually. When the precast concrete anti-shear blocks come into contact with the block webs, the bearing capacity gradually increases. When the bearing capacity reaches the second peak load point, cracks begin to appear in the block webs and shells, and the bearing capacity of the specimen begins to decline thereafter. Due to the difference of clearance between precast concrete anti-shear blocks and hollow block webs, the relative displacement corresponding to the second peak point of load is also different. In general, the shear behavior of the previously-mentioned masonry triplets with precast concrete anti-shear

Figure 8: Typical failure modes of group CO.

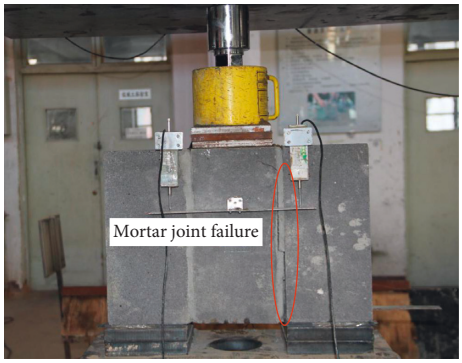


Figure 9: Mortar joint failure.

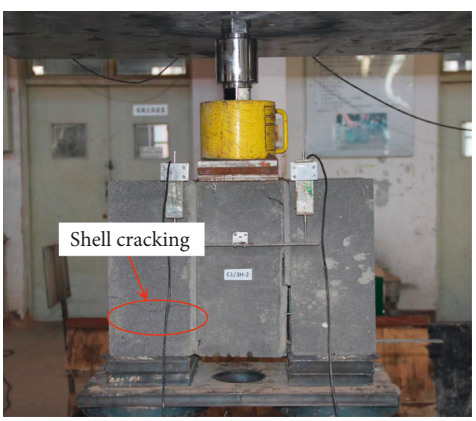


(a)

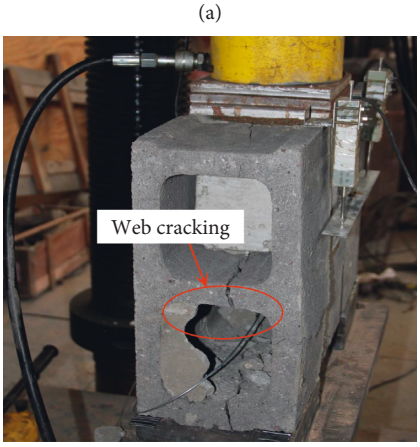


(b)

Figure 10: Shell and web cracking.

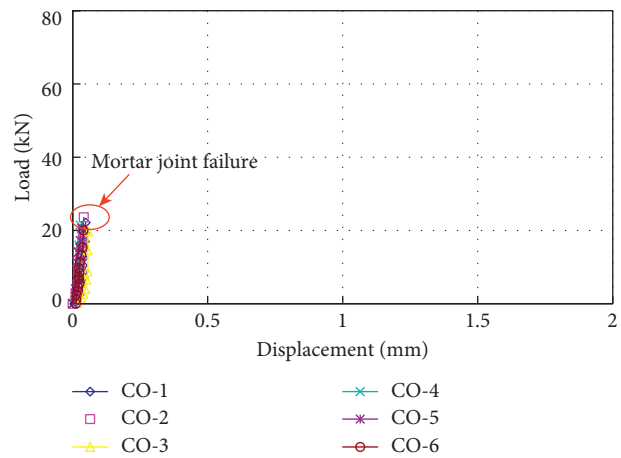


Figure 11: Load-displacement response of group CO.

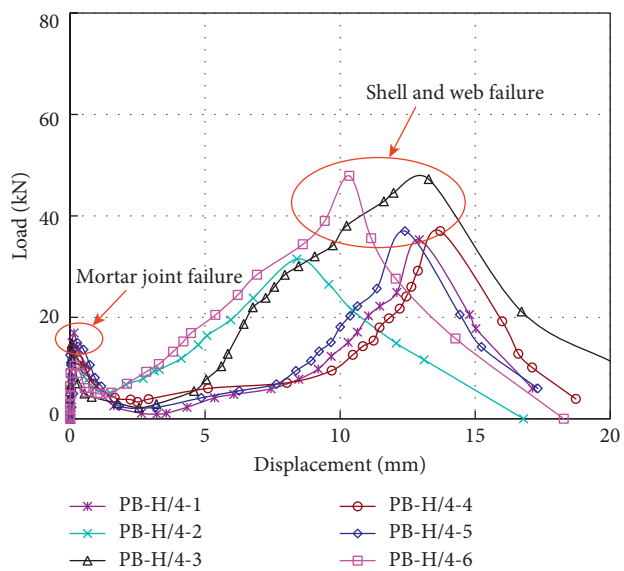


Figure 12: Load-displacement response of group PB-H/4.

blocks exhibits an improved performance in comparison to control masonry triplets.

From Figures 12–14, it could be seen that as the height of the precast concrete anti-shear increases, the strength of the corresponding masonry triplets gradually increases. The wider the width of the precast concrete anti-shear block, the higher the shear strength of the corresponding masonry triplets on condition that the height of the precast concrete anti-shear blocks is the same.

*3.3. The Influence of Precast Concrete Anti-Shear Blocks.* Figure 16 shows a comparison of shear strength of five groups of masonry triplets. The shear strength values provided in Figure 16 are the average values obtained from six triplet specimens. It can be seen that the shear strength of the masonry triplets can be improved by adding precast concrete anti-shear blocks into the cavity of the blocks. The shear strength of group PB-H/4 was increased by 84.65%, that of

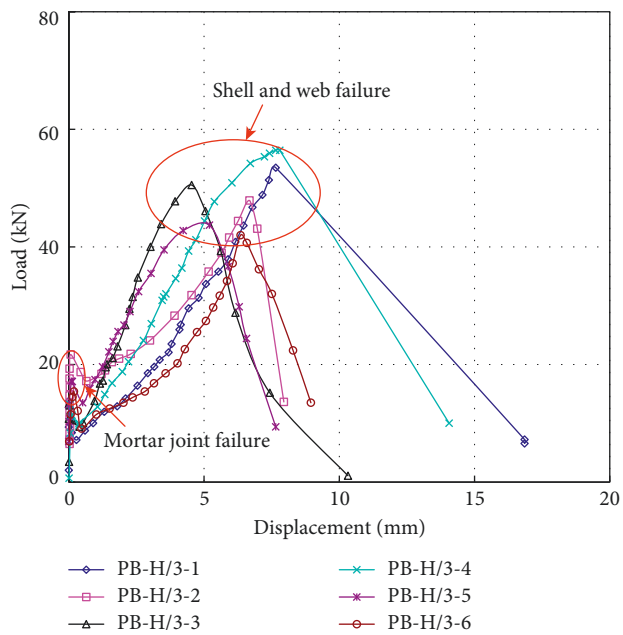


Figure 13: Load-displacement response of group PB-H/3.

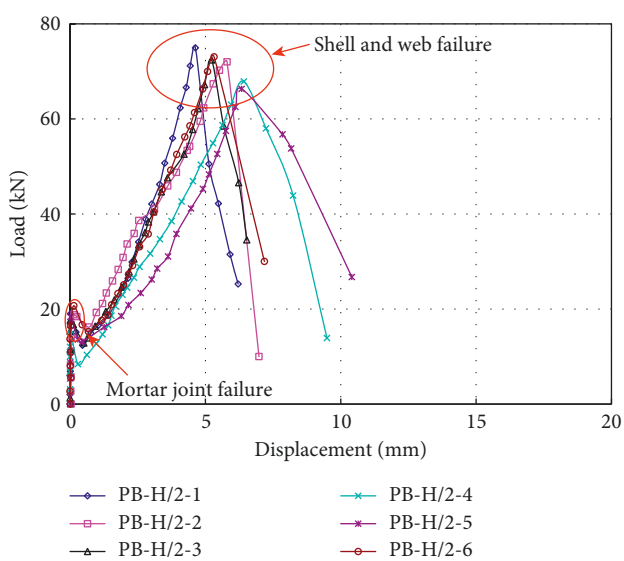


Figure 14: Load-displacement response of group PB-H/2.

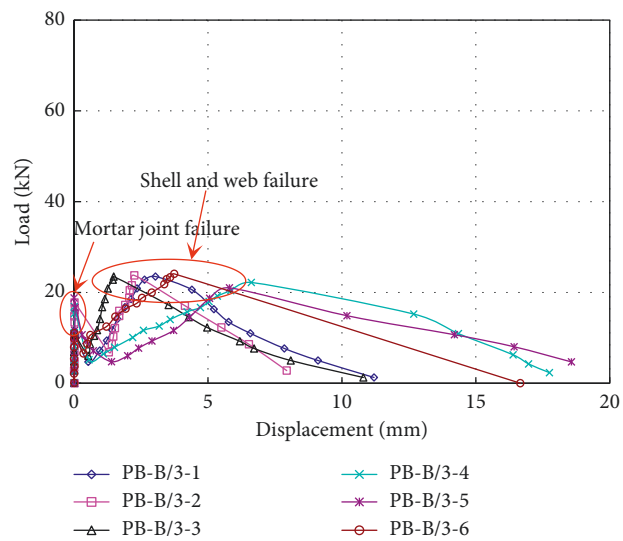


Figure 15: Load-displacement response of group PB-B/3.

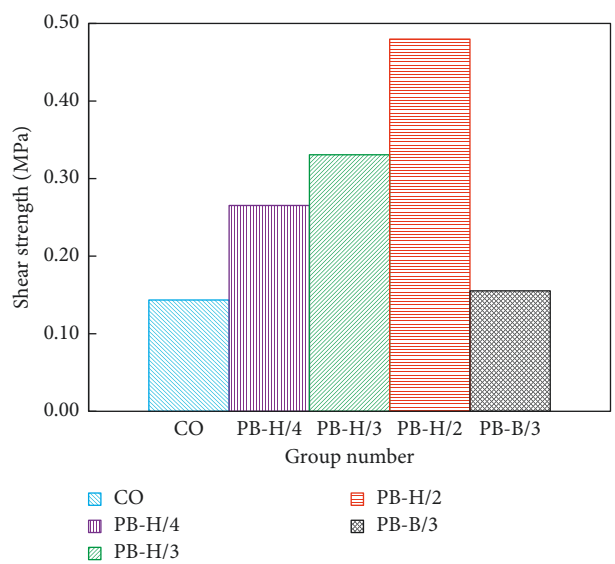


Figure 16: Comparison of shear strength of masonry triplets.

group PB-H/3 was increased by 130.48%, that of group PB-H/2 was increased by 234.48%, and that of group PB-B/3 was not significantly increased. The strength increase of group PB-H/2 is the most significant and that of group PB-B/3 is the smallest, indicating that the width of precast concrete anti-shear blocks has a more significant effect on the shear strength of masonry triplets.

The mean value, standard deviation, and coefficient of variation of shear strength of each group are shown in Table 1. Since the increase amplitude of shear strength in PB-B/3 is not significant, it will not be discussed later.

For groups PB-H/4, PB-H/3, and PB-H/2, it can be concluded that the average value of masonry shear strength increases with the increasing height of precast concrete anti-shear blocks. According to the failure mode of the specimens, it was found that the shear strength of the masonry triplets was only related to the damage degree of the blocks, and the precast concrete anti-shear blocks remain intact. There was a good correlation between the shear strength of masonry triplets and the height of precast concrete anti-shear blocks. Therefore, an equation to the relationship between the height of precast concrete anti-shear block and the shear strength of masonry was derived using parabolic regression, as shown in Figure 17.

The best-fit equations are as follows:

$$f_{\mathrm{v,m}} = 5.05x^2 + 0.67x + 0.15, \tag{1}$$

where $f_{\mathrm{v,m}}$ is the mean value of shear strength of masonry (MPa) and $x$ is the height of the precast concrete anti-shear block (m).

Table 1: Measured value of shear strength.

| Group number | Mean values (MPa) | Standard deviation (MPa) | Coefficient of variation |
|---|---|---|---|
| CO | 0.14 | 0.01 | 0.07 |
| PB-H/4 | 0.27 | 0.04 | 0.15 |
| PB-H/3 | 0.33 | 0.03 | 0.09 |
| PB-H/2 | 0.48 | 0.02 | 0.04 |
| PB-B/3 | 0.16 | 0.02 | 0.13 |

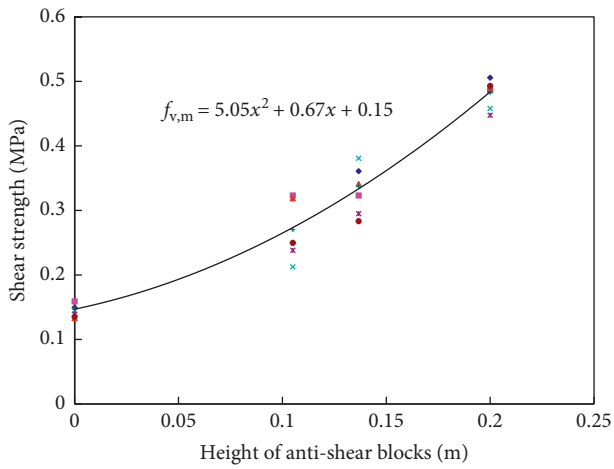


Figure 17: Relationship curve of height of anti-shear blocks and shear strength.

It can be seen from Figure 17 that the test results are in good agreement with the fitting curve; therefore, the parabolic constitutive relation is reasonable.

The above fitting formula is only applicable to hollow concrete blocks with strength grade MU7.5. It can be seen from the failure mode of the tested specimens that the failure of the masonry triplets with precast anti-shear blocks is manifested as the failure of the hollow concrete blocks themselves. The shear strength of masonry triplets with precast concrete anti-shear blocks is only related to the strength of concrete blocks themselves and the size of precast concrete anti-shear blocks. Therefore, the shear strength of the masonry with precast concrete anti-shear blocks can be improved from two aspects: on the one hand, the precast concrete anti-shear blocks can be set; on the other hand, high strength hollow concrete blocks should be used.

## 4. Conclusions

This paper presents an experimental program where the shear behavior of hollow concrete block masonry triplets with precast concrete anti-shear blocks is assessed.

This paper discusses the shear performance of the hollow concrete block masonry triplets with different precast concrete anti-shear blocks, compared with hollow concrete blocks masonry triplets without precast concrete anti-shear block, in shear strength and deformability.

The following points summarize the results from this study:

(1) Hollow concrete block masonry triplets with precast concrete anti-shear blocks exhibited higher gain in deformability in comparison to masonry triplets without precast concrete anti-shear blocks.

(2) The shear strength of the hollow concrete block masonry triplets could be improved by setting precast concrete anti-shear blocks into the cavity of the blocks, up to a maximum of 234.48%.

(3) The shear strength of the masonry triplets constructed with precast concrete anti-shear block was not controlled by the damage of the mortar layer, but by the cracks occurring in the block shells and webs.

(4) For a given grade of hollow concrete blocks, an equation for the relationship between the shear strength of masonry and the height of precast concrete anti-shear block was proposed using parabolic regression.

## Data Availability

The data used to support the findings of this study are included within the article.

## Additional Points

(i) Hollow concrete block masonry triplets with precast concrete anti-shear blocks were tested under monotonic shear loading. (ii) Hollow concrete block masonry triplets with precast concrete anti-shear blocks behaved in a ductile manner under shear loading. (iii) The proposed precast concrete anti-shear blocks could significantly enhance the strength and ductility of hollow concrete block masonry. (iv) The proposed precast concrete anti-shear blocks could provide the advantages of cost effectiveness and rapid construction.

## Conflicts of Interest

The authors declare that there are no conflicts of interest regarding the publication of this paper.

## Acknowledgments

This work was supported by the Tianjin Science and Technology Commission (grant nos. 17ZXCXSF00040 and 18ZXGDGX00050) and Ministry of Science and Technology of the People's Republic of China (grant nos. 2015BAL03B02 and 2016YFC0701508).

## References

[1] S. M. Dehghan, M. A. Najafgholipour, V. Baneshi, and M. Rowshanzamir, "Mechanical and bond properties of solid clay brick masonry with different sand grading," *Construction and Building Materials*, vol. 174, pp. 1–10, 2018.

[2] N. A. Resketi and V. Toufigh, "Enhancement of brick-mortar shear bond strength using environmental friendly mortars," *Construction and Building Materials*, vol. 195, pp. 28–40, 2019.

[3] A. L. Murmu and A. Patel, "Towards sustainable bricks production: an overview," *Construction and Building Materials*, vol. 165, pp. 112–125, 2018.
[4] L. Zhang, "Production of bricks from waste materials—a review," *Construction and Building Materials*, vol. 47, pp. 643–655, 2013.
[5] N. Sathiparan, M. K. N. Anusari, and N. N. Samindika, "Effect of void area on hollow cement masonry mechanical performance," *Arabian Journal for Science and Engineering*, vol. 39, no. 11, pp. 7569–7576, 2014.
[6] R. Meli and S. Brzev, *Seismic Design Guide for Low-Rise Confined Masonry Buildings*, Earthquake Engineering Research Institute, Oakland, CA, USA, 2011.
[7] B. V. V. Reddy and C. V. U. Vyas, "Influence of shear bond strength on compressive strength and stress-strain characteristics of masonry," *Materials and Structures*, vol. 41, no. 10, pp. 1697–1712, 2008.
[8] M. Dhanasekar, "Review of modelling of masonry shear," *International Journal of Advances in Engineering Sciences and Applied Mathematics*, vol. 2, no. 3, pp. 106–118, 2010.
[9] A. Coburn and R. Spence, *Earthquake Protection*, Wiley, West Sussex, UK, 2nd edition, 2002.
[10] G. S. Pavan and K. S. N. Rao, "Behavior of brick-mortar interfaces in FRP-strengthened masonry assemblages under normal loading and shear loading," *Journal of Materials in Civil Engineering*, vol. 28, no. 2, article 04015120, 2016.
[11] R. Oyguc and E. Oyguc, "2011 Van earthquakes: lessons from damaged masonry structures," *Journal of Performance of Constructed Facilities*, vol. 31, no. 5, article 04017062, 2017.
[12] M. A. Sherafati and M. R. Sohrabi, "Performance of masonry walls during Kaki, Iran, earthquake of April 9, 2013," *Journal of Performance of Constructed Facilities*, vol. 30, no. 3, article 04015040, 2016.
[13] G. Fiorentino, A. Forte, E. Pagano et al., "Damage patterns in the town of Amatrice after August 24th 2016 Central Italy earthquakes," *Bulletin of Earthquake Engineering*, vol. 16, no. 3, pp. 1399–1423, 2018.
[14] B. Zhao, F. Taucer, and T. Rossetto, "Field investigation on the performance of building structures during the 12 May 2008 Wenchuan earthquake in China," *Engineering Structures*, vol. 31, no. 8, pp. 1707–1723, 2009.
[15] E. Sayın, B. Yön, Y. Calayır, and M. Karaton, "Failures of masonry and adobe buildings during the June 23, 2011 Maden-(Elazığ) earthquake in Turkey," *Engineering Failure Analysis*, vol. 34, pp. 779–791, 2013.
[16] S. Brzev, M. Astroza, and M. O. Moroni, "Performance of confined masonry buildings in the February 27, 2010 Chile earthquake," EERI Report, Earthquake Engineering Research Institute, Oakland, CA, USA, 2010.
[17] FEMA306, "Evaluation of earthquake damaged concrete and masonry wall buildings—basic procedures," Technical Report FEMA306, Federal Emergency Management Agency (FEMA), Prepared by Applied Technology Council, Washington, DC, USA, 1999.
[18] Ministry of Housing and Urban-Rural Development of the People's Republic of China, *GB/T 4111-2013: Test Methods for the Concrete Block and Brick*, China Architecture Building Press, Beijing, China, 2011.
[19] General Administration of Quality Supervision, *GB 175-2007: Inspection and Quarantine of People's Republic of China. Common Portland Cement*, China Architecture Building Press, Beijing, China, 2007.
[20] General Administration of Quality Supervision, *GB/T 1346-2011: Inspection and Quarantine of People's Republic of China. Test Methods for Water Requirement of Normal Consistency, Setting Time and Soundness of the Portland Cement*, China Architecture Building Press, Beijing, China, 2011.
[21] Ministry of Housing and Urban-Rural Development of the People's Republic of China, *JGJ/T 70-2009: Standard for Test Method of Basic Properties of Construction Mortar*, China Architecture Building Press, Beijing, China, 2009.
[22] Ministry of Housing and Urban-Rural Development of the People's Republic of China, *GB/T 20129-2011: Standard for Test Method of Basic Mechanics Properties of Masonry*, China Architecture Building Press, Beijing, China, 2011.
[23] General Administration of Quality Supervision, *GB/T 50129-2011: Inspection and Quarantine of People's Republic of China. Standard for Test Method of Basic Mechanics Properties of Masonry*, China Architecture Building Press, Beijing, China, 2011.