Active and Passive Elec. Comp., 1995, Vol. 18, pp. 203–210
Reprints available directly from the publisher
Photocopying permitted by license only

ECONOMICAL AND ACCURATE DIGITALLY PROGRAMMABLE DUAL-POLARITY GAIN AMPLIFIER**

PROFESSOR T.S. RATHORE* Visiting Researcher
and DR. L.C. JAIN
Knowledge-Based Engineering Systems Group School of Electronic Engineering
University of South Australia Adelaide, Australia

(Received November 28, 1994; in final form December 29, 1994)

A digitally programmable, dual-polarity gain amplifier is proposed. It uses total resistance less than those presented earlier. The effect of on-resistance of switches can be fully compensated.

1. INTRODUCTION

Some amplifiers that can be programmed for dual-polarity with a single switch, and use minimum number of resistors were presented in [1]. However, in IC fabrication it is preferable to have less total resistance rather than the number of resistors. In this paper, a new amplifier that has not only the facility of programming the polarity of the gain with a single switch, but also possesses total resistance considerably less, is proposed.

2. PROGRAMMABLE AMPLIFIER CONFIGURATION

The proposed amplifier configuration is shown in Fig. 1. Gain of the amplifier is:

$$\frac{V_0}{V_i} = \begin{cases} K_- = -p & \textit{when S closed} \quad (1) \\ K_+ = \dfrac{1+p+b/c}{1+d} - p & \textit{when S open} \quad (2) \end{cases}$$

where

$$p = a + b + \frac{ab}{c},$$

$$a = \frac{R_2}{R_1},\ b = \frac{R_3}{R_1},\ c = \frac{R_4}{R_1},\ d = \frac{R_5}{R_6}. \quad (3)$$

** Short version was presented in Microelectronics Conference, Melbourne, 1993.

* On leave from IIT, Bombay, India.

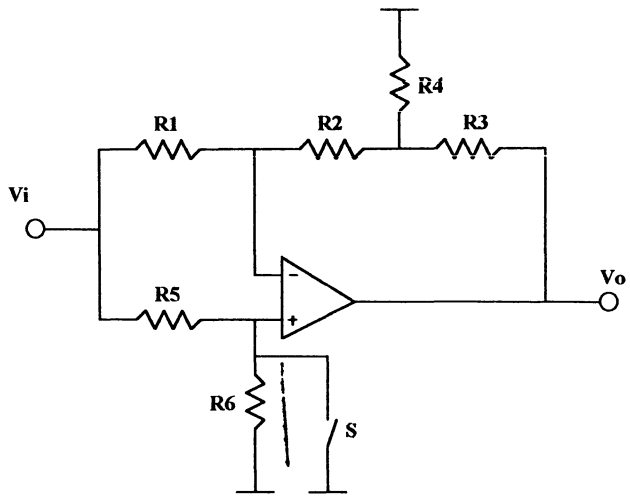

FIGURE 1 Proposed amplifier configuration

It is obvious from eqns (1) and (2) that polarity of the gain can be controlled by the switch S. Conditions for $K_- = -K_+ = K$ imposed by eqns. (1) and (2) are

$$K = a + b + \frac{ab}{c} \tag{4}$$

and

$$d = \left(1 + \frac{b}{c} - K\right)/(2K) \tag{5}$$

For d to be non-negative, eqn. (5) demands

$$\left(1 + \frac{b}{c}\right) \geq K \tag{6}$$

Since, for finite gain, $1 \leq K < \infty$, eqns (4) and (5) imply

$$c \neq 0,\ a \neq \infty,\ b \neq \infty;\ b \neq 0,\ c \neq \infty,\ d \neq \infty. \tag{7}$$

Out of many possibilities that satisfy eqns. (4), (5), we consider the following, which reduces one resistor

Case A: $a = 0$ $\quad R_2 = 0$, or $R_1 = \infty$

Case B: $d = 0$ $\quad R_5 = 0$, or $R_6 = \infty$.

$R_1 = \infty$ is not admissible, as it will reduce, see eqn. (3), $b = c = 0$, the undesirable conditions in eqn. (7). Also, R_5 cannot be zero, because when S is closed (for

negative gains), input will be shorted. However, R_5 can be replaced by a switch $\bar{S}$, which opens when S is closed and vice versa.

Case A: $R_2 = 0$

In this case the circuit of Fig. 1 reduces to a circuit that has been studied in detail in Ref. [1]. Out of the four cases, case (iv) in [1] restricts the gain ≤ 1. Being a case of an attenuator (and not an amplifier), it will not be considered.

For the remaining cases, the amplifier circuits are shown in Fig. 2 (a), (b) and (c), where we have modified the resistances so as to yield an input resistance $\geq R$. In Fig. (c), the resistance R_4 is replaced by a switch $\bar{S}_1$, which opens when S_1 closes and vice versa. The total resistances for a specific gain K for the three circuits are, respectively,

$$R_{ta} = 6(1 + K)R \qquad K \geq 0 \tag{8a}$$

$$R_{tb} = 2\left(4 + \frac{2K^2}{2K - 1}\right)R \qquad K \geq \frac{1}{2} \tag{8b}$$

$$R_{tc} = \left(1 + \frac{K^2}{K - 1}\right)R \qquad K \geq 1. \tag{8c}$$

It can be verified that

$$R_{tb}, R_{tc} < R_{ta}, \qquad \text{for all } K \tag{9a}$$

$$R_{tc} \leq R_{tb}, \qquad K = 1, K \geq 1.112 \tag{9b}$$

Case B: $R_6 = \infty$, R_5 replaced by a switch $\bar{S}$.

For this case, the design relations are

$$R_1 = R \text{ (For } R_{in} \geq R) \tag{10a}$$

$$R_2 = aR \tag{10b}$$

$$R_3 = K(1 - a)R \tag{10c}$$

$$R_4 = \frac{K(1 - a)}{K - 1}R \tag{10d}$$

The total resistance for a specific gain K is

$$R_t = \left(1 + a + \frac{K^2(1 - a)}{K - 1}\right)R \tag{11}$$

From eqns. (8) and (11), we see that $R_t \leq R_{t3}, R_{t2}, R_{t1}$ for all values of $a \leq 1$.

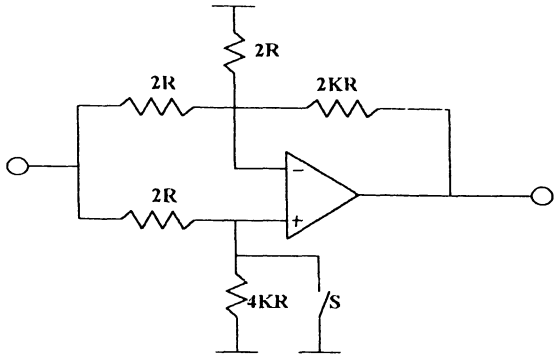

(a) Case (i)

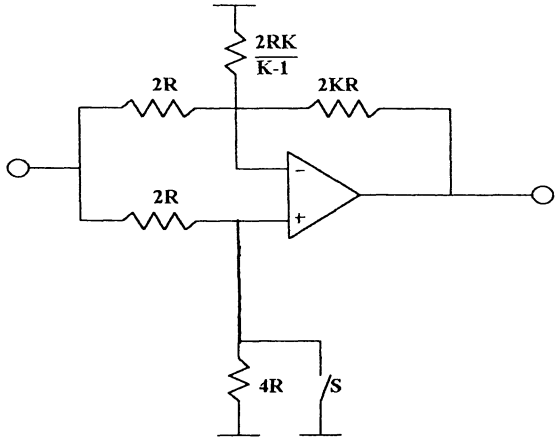

(b) Case (ii)

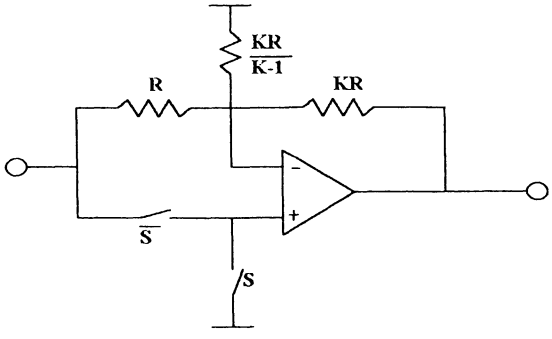

(c) Case (iii)

FIGURE 2 Amplifier configurations reported in reference [1]

Thus, the present circuit has the least value for R_t for any specific gain K. However, a cannot be 1, because $a = 1$ reduces $R_3 = R_4 = 0$ and consequently, the output will be shorted. R_t decreases with increase in a. Therefore, for minimum R_t, a should be chosen as close as possible to unity. We choose $a = 0.9$ to yield low R_t and also reasonably small spread in resistance values given by eqn. (10).

The complete set of design relations are

$$R_1 = R,\ R_2 = 0.9\,R,\ R_3 = \frac{KR}{10},\ R_4 = \frac{K}{10(K-1)}R,\ R_6 = 0 \tag{12}$$

$$R_t = \left(1.9 + \frac{K^2}{10(K-1)}\right)R \tag{13}$$

3. IMPLEMENTATION

Fig. 3 gives the amplifier with N gain values programmed. It uses $(N + 2)$ switches, one more than the minimum value. However, the on-resistances R_s of the switches affect the gain accuracy. The effect can be made negligible by

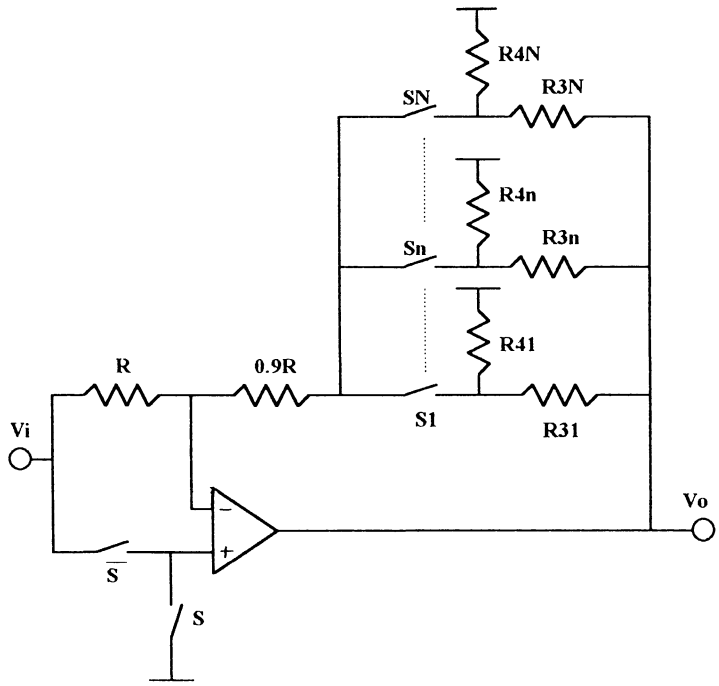

FIGURE 3 Amplifier implementation with less number of switches

choosing the lowest resistance much higher than maximum R_s, but this means using high-valued resistances, increasing the total resistance. To fully compensate for the effect of R_s, an alternative implementation is given in Fig. 4. Now, each resistance has a switch in series. Thus, the effect of on-resistance of each switch can be compensated for by reducing the resistance value by the on-resistance of the switch in series with it.

Assuming that all the switches have equal drift-free on-resistance R_s, another circuit implementation is shown in Fig. 5 where

$$r_{3n} = \begin{cases} R_{3n} - R_{3n-1}, & 2 \le n \le N \\ R_{31}, & n = 1 \end{cases} \tag{14a}$$

$$r_{4n} = \begin{cases} R_{4n} - R_{4n+1}, & 1 \le n \le N-1, \quad K_1 \ne 1 \\ R_{4n} - R_{4n+1}, & 2 \le n \le N-1, \quad K_1 = 1 \\ \infty, & n = 1, \quad K_1 = 1 \end{cases} \tag{14b}$$

The total resistance of the circuit is now given by

$$R_t = \left(1.9 + \frac{K_N}{10} + \frac{K_0}{10(K_0 - 1)}\right)R \tag{15}$$

where $K_0 = K_{\min} > 1$, $K_n > K_{n-1}$ $(n = 1, 2, \cdots, N)$. To have a quantitative feel,

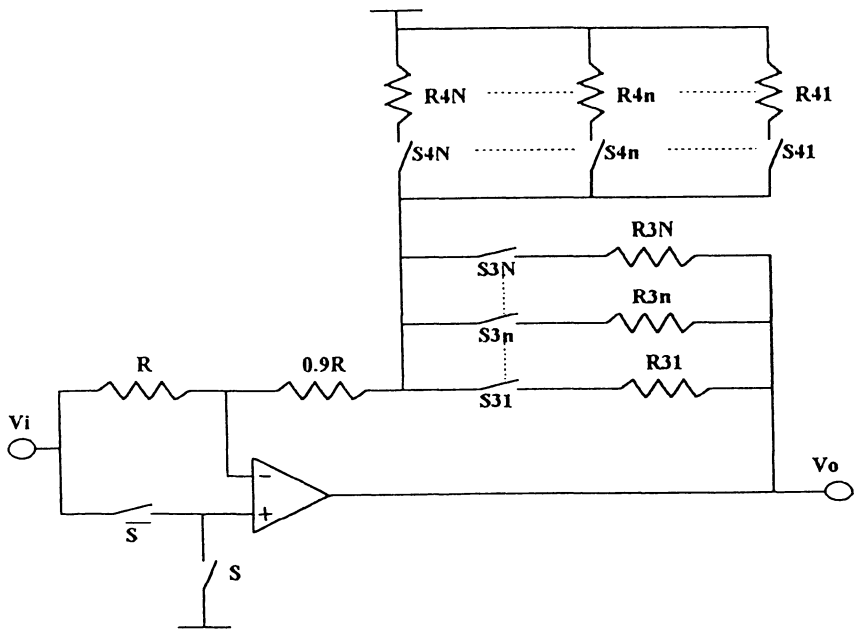

FIGURE 4 Fully compensated implementation of programmable amplifier

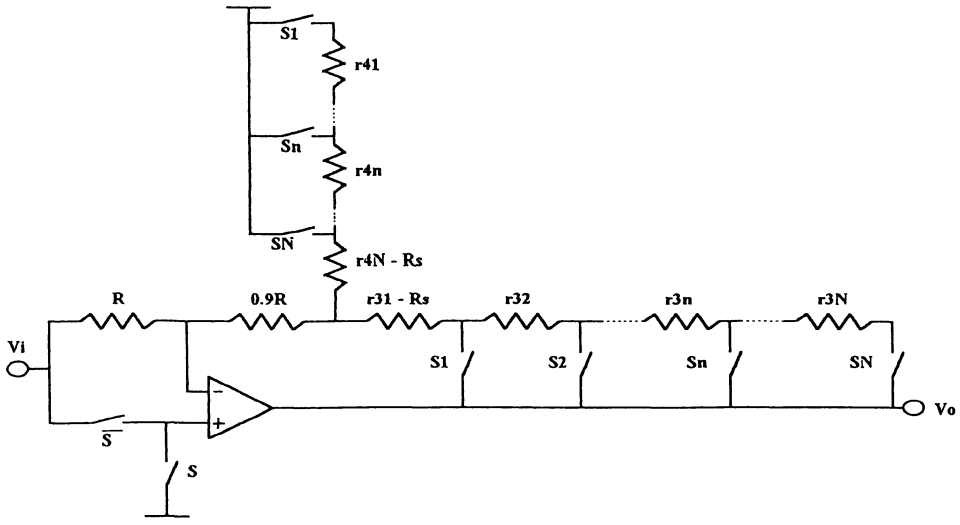

FIGURE 5 Compensated amplifier with reduced total resistance

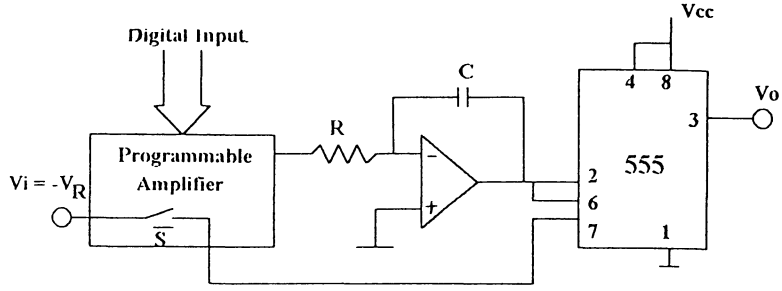

Switch S is replaced by the internal switch of 555.

(a)

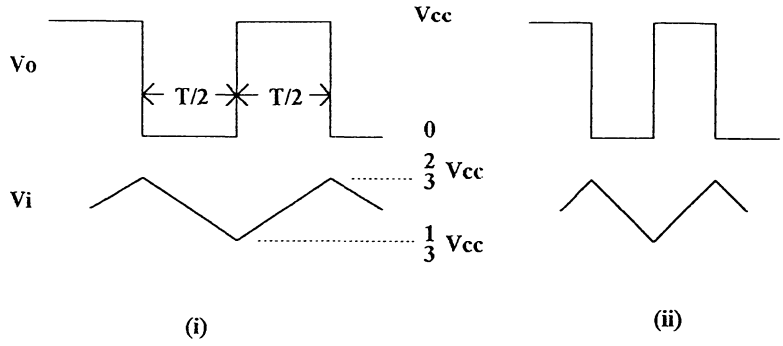

(b)

FIGURE 6 (a) Digitally programmable function generator (b) Waveforms for (i) Digital input D_1 (ii) Digital input D_2, $D_2 > D_1$.

the R_t for implementing 10 gain values (gain 1, 2, 10 and the remaining seven of arbitrary values lying between 2 and 10) and choosing $R = 10K$, eqn. (15) gives $R_t = 31K\Omega$.

4. APPLICATION

A typical application of a dual-polarity controlled amplifier is shown in Fig. 6 in realizing a function generator whose frequency can be digitally programmed.

5. CONCLUSION

A digitally programmable, dual-polarity gain amplifier has been presented. Though it uses more resistors, the total resistance is less than those in Ref. [1]. Thus, the former amplifier is superior to the latter ones for integration. The amplifier can be fully compensated for individual on-resistances of the switches (as shown in Fig. 4). If the on-resistance is assumed to be the same for all the switches, the total resistance can be further reduced (as shown in Fig. 5). An application of a dual-polarity programmable amplifier in realizing a programmable function generator has been given.

ACKNOWLEDGMENTS

The pre-competitive 1993 research grant and the research grand under Visiting Researcher 1993 Scheme by the University of South Australia are acknowledged.

REFERENCE

1. Rathore, T.S.: "Digitally controlled amplifiers with fewer resistors and sensitivities", Electron. Lett., 1983, 19, pp. 646–647.