Active and Passive Elec. Comp., 1998, Vol. 20, pp. 235–240
Reprints available directly from the publisher
Photocopying permitted by license only

NOVEL CURRENT-CONVEYOR-BASED UNIVERSAL CURRENT-MODE BIQUAD FILTER WITH THREE INPUTS AND ONE OUTPUT

MUHAMMAD TAHER ABUELMA'ATTI*
and HUSSAIN ABDULLAH AL-ZAHER

King Fahd University of Petroleum and Minerals, Box 203, Dhahran 31261, Saudi Arabia

(Received 19 August 1997; In final form 3 November 1997)

A novel universal current-mode filter with three inputs and one high imedance output is presented. The proposed circuit uses four plus-type second-generation current-conveyors, grounded resistors and grounded capacitors. The proposed circuit enjoys low active and passive sensitivities and independent control of the parameters ω_o and ω_o/Q_o using grounded resistors.

Keywords: Current conveyors; active filters

INTRODUCTION

Recently, Chang, Chien and Wang, 1994, proposed a universal active current filter with three inputs and one ouput using current conveyors. The proposed circuit uses two plus-type first-generation current-conveyors, two minus-type second-generation current conveyors, two grounded capacitors and two grounded resistors and enjoys the following attractive features:

1. Low filter sensitivity to passive components.
2. The use of grounded capacitors which is attractive for integrated circuit implementation.

*Corresponding author.

3. The versatility to synthesize virtually any type of active filter transfer function.

However, the circuit suffers from the following disadvantages:

1. Use of different types of current conveyors.
2. Interdependent control of the parameters ω_o and ω_o/Q_o. Thus, while the parameter ω_o can be adjusted without disturbing the parameter ω_o/Q_o, the parameter ω_o/Q_o cannot be adjusted without disturbing the parameter ω_o.
3. The sensitivity of the circuit to the voltage and current tracking errors of the current conveyors is not clear.

This paper presents a novel three-input universal current-mode biquad active filter. The proposed circuit enjoys the following attractive features:

1. Use of one type of second-generation current-conveyor.
2. Independent control of the parameters ω_o and ω_o/Q_o. Thus the parameter ω_o can be adjusted without disturbing the parameter ω_o/Q_o, and the parameter ω_o/Q_o, can be adjusted without disturbing the parameter ω_o.
3. Enjoys low active and passive sensitivities.
4. Use of grounded capacitors and grounded resistors.

PROPOSED CIRCUIT

The proposed circuit is shown in Figure 1. The circuit uses plus-type second-generation current-conveyors (CCII+) only. Using the standard notation, the CCII+ characteristics can be described by $i_z = \alpha i_x$, $\nu_x = \beta \nu_y$, where $\alpha = 1 - \varepsilon_i$ and ε_i denotes the current-tracking error, $\beta = 1 - \varepsilon_\nu$ and ε_ν denotes the voltage-tracking error. The single output current I_o can be expressed as

$$I_o = \frac{\alpha_4\beta_4 G_7}{G_4} \frac{s^2 C_1 C_3 \alpha_2\beta_2 I_3 - sC_1 G_4 \alpha_2 I_2 + G_2 G_4 \alpha_1\alpha_2\alpha_3\beta_1 I_1}{s^2 C_1 C_6 + sC_1 G_6 + G_2 G_5 \alpha_1\alpha_2\alpha_3\beta_1\beta_3} \tag{1}$$

From (1) the parameters ω_o and ω_o/Q_o can be expressed as

$$\omega_o^2 = \frac{\alpha_1\alpha_2\alpha_3\beta_1\beta_3 G_2 G_5}{C_1 C_6} \tag{2}$$

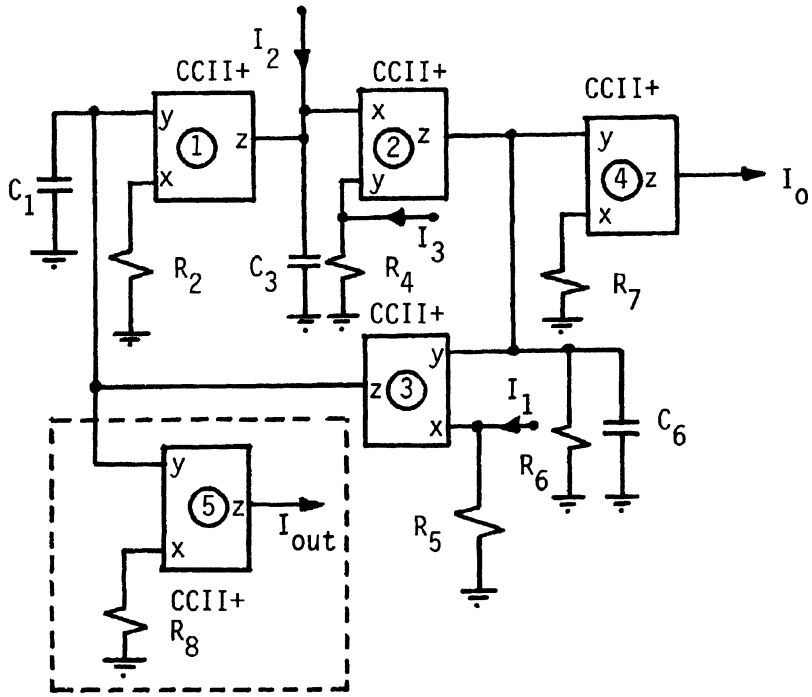

FIGURE 1 Proposed universal current-mode biquad Filter.

and

$$\frac{\omega_o}{Q_o} = \frac{G_6}{C_6} \tag{3}$$

From (1) it can be seen that:

1. The lowpass response can be realised with $I_2 = I_3 = 0$
2. The highpass response can be obtained with $I_1 = I_2 = 0$
3. The bandpass response can be obtained with $I_1 = I_3 = 0$
4. The notch response can be obtained with $I_2 = 0$ and $I_1 = I_3$
5. The allpass response can be obtained with $I_1 = I_2 = I_3$, $G_4 = G_5$ and $C_3 = C_6$.

From (1) it can also be seen that the lowpass gain, the highpass gain and the bandpass gain are approximately given by

$$G_{LP} \cong \frac{G_7}{G_5} \tag{4}$$

$$G_{\mathrm{HP}} \cong \frac{G_7}{G_4}\frac{C_3}{C_6} \tag{5}$$

and

$$G_{\mathrm{BP}} \cong \frac{G_7}{G_6} \tag{6}$$

From (2) – (6) it can be seen that the parameter ω_o can be adjusted by controlling the resistance $R_2 = 1/G_2$ without disturbing the parameters ω_o/Q_o, G_{LP}, G_{HP} and G_{BP}. Also, the highpass gain can be adjusted by controlling the resistance $R_4 = 1/G_4$ without disturbing the parameters ω_o, ω_o/Q_o, G_{LP} and G_{BP}. Moreover, the parameter ω_o/Q_o can be adjusted by controlling the resistance $R_6 = 1/G_6$ without disturbing the parameter ω_o. However, controlling the resistance R_6 will disturb the bandpass gain G_{BP}. A possible strategy for adjusting the parameters ω_o, ω_o/Q_o, G_{LP}, G_{HP} and G_{BP} is, therefore, as follows: First the resistance $R_6 = 1/G_6$ is controlled to adjust the parameter ω_o/Q_o, then the resistor $R_7 = 1/G_7$ is controlled to adjust the bandpass gain G_{BP}; the resistance $R_4 = 1/G_4$ is controlled to adjust the highpass gain G_{HP}; the resistance $R_5 = 1/G_5$ is controlled to adjust the lowpass gain G_{LP}, and finally the resistance $R_2 = 1/G_2$ is adjusted to control the parameter ω_o.

From (2) and (3) it is easy to show that the active and passive sensitivities of the parameters ω_o and Q_o are

$$\begin{aligned}
S_{R_2}^{\omega_o} = S_{R_5}^{\omega_o} = S_{C_1}^{\omega_o} = S_{C_6}^{\omega_o} = -S_{\alpha_1}^{\omega_o} = -S_{\alpha_2}^{\omega_o} = -S_{\alpha_3}^{\omega_o} \\
= -S_{\beta_1}^{\omega_o} = -S_{\beta_3}^{\omega_o} = -\frac{1}{2} \\
S_{R_2}^{Q_o} = S_{R_5}^{Q_o} = S_{C_1}^{Q_o} = -S_{C_6}^{Q_o} = -S_{\alpha_1}^{Q_o} = -S_{\alpha_2}^{Q_o} \\
= -S_{\alpha_3}^{Q_o} = -S_{\beta_1}^{Q_o} = -S_{\beta_3}^{Q_o} = -\frac{1}{2} \\
S_{R_6}^{Q_o} = 1, \quad S_{\alpha_4}^{\omega_o} = S_{\beta_4}^{\omega_o} = S_{\alpha_4}^{Q_o} = S_{\beta_4}^{Q_o} = S_{\beta_2}^{\omega_o} = S_{\beta_2}^{Q_o} = 0 \\
S_{R_4}^{\omega_o} = S_{R_4}^{Q_o} = S_{R_7}^{Q_o} = S_{R_7}^{\omega_o} = 0
\end{aligned}$$

Thus, all the active and passive sensitivities are no more than unity.

It is worth mentioning here that, another output current can be obtained when $I_1 = 0$. By using an additional second-generation current-conveyor and a grounded resistor as shown in the dotted box of Figure 1; this addition is, however, optional, the new output current can be expressed as

$$I_{\text{out}} = \alpha_3\alpha_4\beta_3\beta_4 \frac{G_8}{G_7}\frac{G_5}{sC_1} I_o \tag{7}$$

Thus, when I_o is realising a bandpass response, the current I_{out} will realise a lowpass response. Also, when I_o is realising a highpass response, the current I_{out} will realise a bandpass response.

EXPERIMENTAL RESULTS

To verify the theoretical analysis, the proposed circuit was used to realise LP, HP, BP and notch filters using the AD844 current-conveyor.

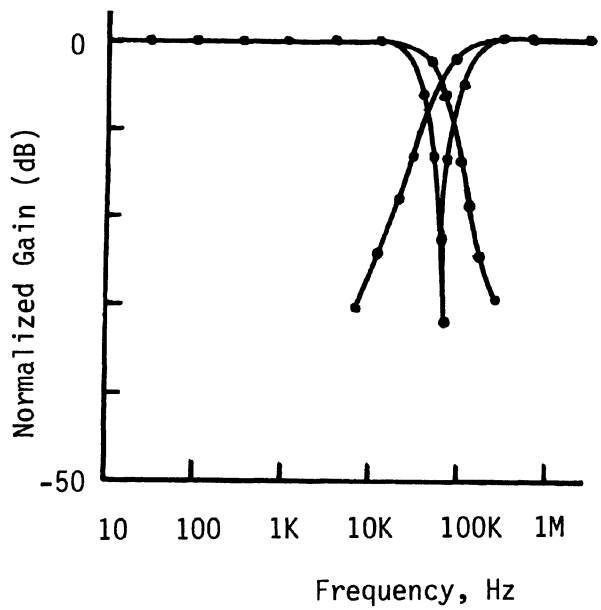

FIGURE 2 Measured lowpass, highpass and notch responses. $C_1 = C_3 = C_6 = 470\,\text{PF}$, $R_2 = 4\,\text{K}$, $R_4 = R_5 = R_6 = R_7 = 5\,\text{K}$.

The results obtained with $C_1 = C_3 = C_6 = 470$ pF, $R_2 = 4$K, $R_4 = R_5 = R_6 = R_7 = 5$K are shown in Figure 2. These results are in good agreement with the theoretical analysis.

CONCLUSION

A new universal current-mode filter has been presented. The proposed filter offers the following advantages:

(i) Use only one type of current-conveyors (CCII+).
(ii) All resistors and capacitors are grounded.
(iii) Low active and passive sensitivities.
(iv) Independent control of the parameters ω_o and ω_o/Q_o using grounded resistors.
(v) High output impedance.
(vi) All the standard filter functions are realised with no component matching requirement except for all allpass realisation.

References

Chang, C.-M., Chien, C.-C. and Wang, H.-Y. (1994) Universal active current filter with three inputs using current conveyors-Part 2, *International Journal of Electroncis*, **76**, 87–89.