Active and Passive Elec. Comp., 1998, Vol. 21, pp. 33–41
Reprints available directly from the publisher
Photocopying permitted by license only

UNIVERSAL CURRENT-CONTROLLED CURRENT-MODE FILTER WITH THREE-INPUTS AND ONE-OUTPUT USING THE CURRENT CONTROLLED CONVEYOR

MUHAMMAD TAHER ABUELMA'ATTI*
and MUHAMMAD ALI AL-QAHTANI

King Fahd University of Petroleum and Minerals, Box 203, Dhahran 31261, Saudi Arabia

(Received 18 November 1997; In final form 23 January 1998)

A new current-mode universal filter is proposed. The filter uses five current-controlled current-conveyors (CCCII) and can realise lowpass, highpass, bandpass, notch and allpass responses. The parameters ω_o, (ω_o/Q_o) can be controlled by adjusting the bias currents of the CCCIIs. The proposed circuit enjoys low sensitivities.

Keywords: Current conveyors; current-mode filters

INTRODUCTION

Universal active filters using the operational transconductance amplifier (OTA) have many advantages such as simplicity, integratability and programmability [1–5]. However, they have some problems with dynamic range and at high frequencies of operation. On the other hand, current-mode current-conveyor based filters can offer wider signal bandwidths, greater linearity and larger dynamic ranges of operation [6–18]. However, they lack programmability. While programmability can be achieved by combining current conveyors and OTAs [19], the recently introduced second-generation current-controlled conveyor (CCCII) [20] allows current conveyor

*Corresponding author.

applications to be extended to the domain of electronically programmable functions. Figure 1(a) shows the electrical symbol of the CCCII+. Using two CCCII+ and two grounded capacitors, a voltage-mode bandpass filter was reported [20] and a current-mode bandpass filter was reported [21]. No attempt has been reported, so far, to present universal second-order current-mode filters using the

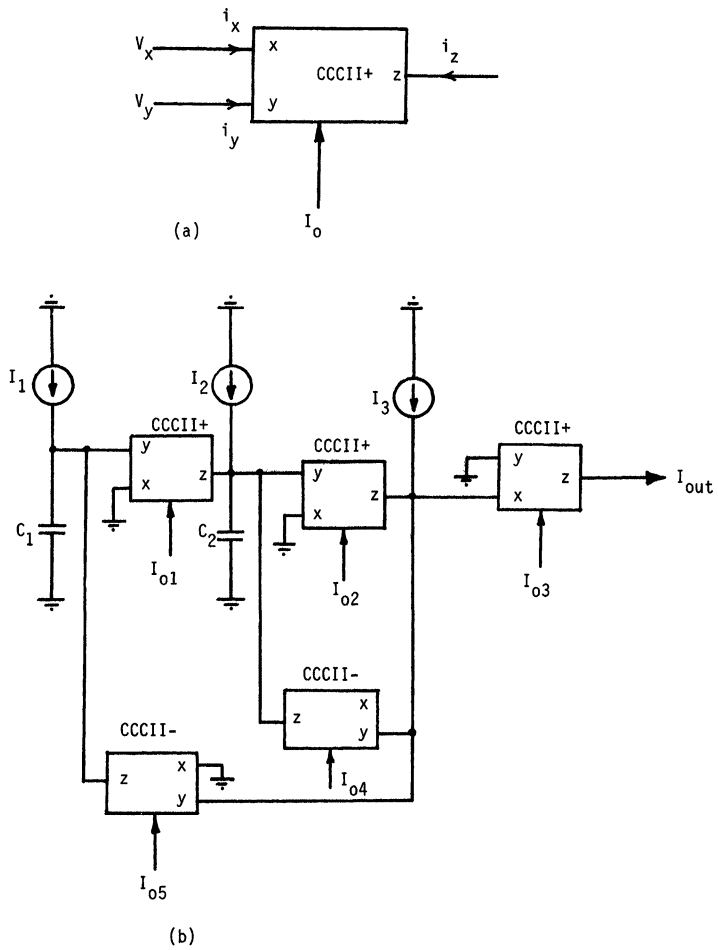

FIGURE 1 (a) Electrical symbol of the plus-type current-controlled current conveyor. (b) Universal current-controlled current-mode filter.

CCCII ± and grounded capacitors only. It is the purpose of this paper to present such a configuration.

PROPOSED CIRCUIT

The proposed circuit is shown in Figure 1(b). Using standard notations, the CCCII± can be characterised by $i_y = 0$, $V_x = V_y + R_x i_x$ and $i_z = \pm i_x$, where $R_x = V_T/2I_o$, V_T is the thermal voltage and I_o is the bias current of the CCCII. Routine analysis yields the current transfer function which can be expressed by

$$I_{\text{out}} = -\frac{s^2 I_3 + s(1/C_2R_{x2})I_2 + (1/C_1C_2R_{x1}R_{x2})I_1}{s^2 + s(R_{x3}/C_2R_{x2}R_{x4}) + ((R_{x3}/R_{x5})/C_1C_2R_{x1}R_{x2})} \quad (1)$$

Now, a current-mode bandpass filter is obtained if we choose $I_1 = I_3 = 0$, thus

$$\frac{I_{\text{BP}}}{I_2} = -\frac{s/C_2R_{x2}}{s^2 + s(R_{x3}/C_2R_{x2}R_{x4}) + ((R_{x3}/R_{x5})/C_1C_2R_{x1}R_{x2})} \quad (2)$$

A current-mode lowpass filter is obtained if we choose $I_2 = I_3 = 0$, thus

$$\frac{I_{\text{LP}}}{I_1} = -\frac{(1/C_1C_2R_{x1}R_{x2})}{s^2 + s(R_{x3}/C_2R_{x2}R_{x4}) + ((R_{x3}/R_{x5})/C_1C_2R_{x1}R_{x2})} \quad (3)$$

A current-mode highpass filter is obtained if we choose $I_1 = I_2 = 0$, thus

$$\frac{I_{\text{HP}}}{I_3} = -\frac{s^2}{s^2 + s(R_{x3}/C_2R_{x2}R_{x4}) + ((R_{x3}/R_{x5})/C_1C_2R_{x1}R_{x2})} \quad (4)$$

A current-mode notch (bandreject) filter is obtained if we choose $I_2 = 0$, $I_1 = I_3 = I_i$ and $R_{x3} = R_{x5}$, thus

$$\frac{I_{\text{NOTCH}}}{I_i} = -\frac{s^2 + (1/C_1C_2R_{x1}R_{x2})}{s^2 + s(R_{x3}/C_2R_{x2}R_{x4}) + ((R_{x3}/R_{x5})/C_1C_2R_{x1}R_{x2})} \quad (5)$$

And a current-mode allpass filter is obtained if we choose $I_1 = I_3 = -I_2 = I_i$ and $R_{x3} = R_{x4} = R_{x5}$, thus

$$\frac{I_{\mathrm{AP}}}{I_i} = -\frac{s^2 - s(1/C_2R_{x2}) + (1/C_1C_2R_{x1}R_{x2})}{s^2 + s(1/C_2R_{x2}) + (1/C_1C_2R_{x1}R_{x2})} \tag{6}$$

From Eqs. (2–6) the parameters ω_o and ω_o/Q_o can be expressed as

$$\omega_o^2 = \frac{R_{x3}/R_{x5}}{C_1C_2R_{x1}R_{x2}} \tag{7}$$

and

$$\frac{\omega_o}{Q_o} = \frac{R_{x3}}{C_2R_{x2}R_{x4}} \tag{8}$$

From Eqs. (2–4) it can be seen that the high frequency gain of the highpass filter is equal to unity, the dc gain of the lowpass filter is equal to

$$G_{\mathrm{LP}} = \frac{R_{x5}}{R_{x3}} \tag{9}$$

and the bandpass gain at ω_o is equal to

$$G_{\mathrm{BP}} = \frac{R_{x4}}{R_{x3}} \tag{10}$$

From Eqs. (7–10) it can be seen that the paramter ω_o can be adjusted by controlling the resistance R_{x1}, that is the bias current I_{o1}, without disturbing the parameters ω_o/Q_o, the lowpass gain G_{LP} and the bandpass gain, G_{BP}. Moreover, the parameter ω_o/Q_o can be adjusted by controlling the resistance R_{x2}, that is the bias current I_{o2}, without disturbing the parameter ω_o, the lowpass gain, G_{LP} and the bandpass gain G_{BP}. Furthermore, the bandpass gain can be adjusted by controlling the resistance R_{x4}, that is the bias current I_{o4}, without disturbing the parameter ω_o. However, this will disturb the parameter ω_o/Q_o. Finally, the lowpass gain can be adjusted by controlling the resistance R_{x5}, that is the bias current I_{o5}, without disturbing the

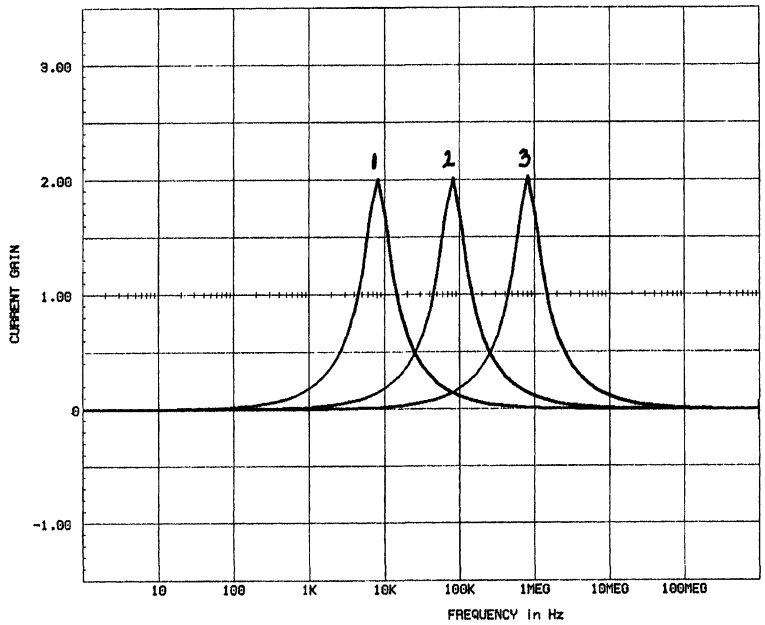

(a)

1: I_{o1}= 1uA 2: I_{o1}= 10 uA 3: I_{o1}= 100 uA

FIGURE 2 Simulated gain-frequency characteristics of the (a) BPF obtained from the circuit of Figure 1 with $C_1 = C_2 = 1000\,\text{pF}$, $I_{o1} = I_{o2} = 1\,\mu\text{A}$, $10\,\mu\text{A}$, $100\,\mu\text{A}$, $I_{o3} = 100\,\mu\text{A}$, $I_{o4} = I_{o5} = 50\,\mu\text{A}$, $I_1 = I_3 = 0$, $I_2 = 1\,\mu\text{A}$ (b) LPF obtained from the circuit of Figure 1 with $C_1 = C_2 = 1000\,\text{pF}$, $I_{o1} = I_{o2} = 1\,\mu\text{A}$, $10\,\mu\text{A}$, $100\,\mu\text{A}$, $I_{o3} = I_{o4} = 100\,\mu\text{A}$, $I_{o5} = 50\,\mu\text{A}$, $I_2 = I_3 = 0$, $I_1 = 1\,\mu\text{A}$ (c) HPF obtained from the circuit of Figure 1 with $C_1 = C_2 = 1000\,\text{pF}$, $I_{o1} = I_{o2} = 1\,\mu\text{A}$, $10\,\mu\text{A}$, $100\,\mu\text{A}$, $I_{o3} = 100\,\mu\text{A}$, $I_{o4} = 100\,\mu\text{A}$, $I_{o5} = 50\,\mu\text{A}$, $I_1 = I_2 = 0$, $I_3 = 1\,\mu\text{A}$.

parameter ω_o/Q_o. However, this will disturb the parameter ω_o. A possible strategy for adjusting the parameters $\omega_o, \omega_o/Q_o$ and the bandpass or the lowpass gains is therefore as follows: first the resistance R_{x4} or R_{x5}, that is the bias current I_{o4} or I_{o5}, is adjusted to control the bandpass gain G_{BP} or the lowpass gain G_{LP}, then the bias current I_{o1} is adjusted to control the parameter ω_o and finally the bias current I_{o2} is adjusted to control the bandpass gain.

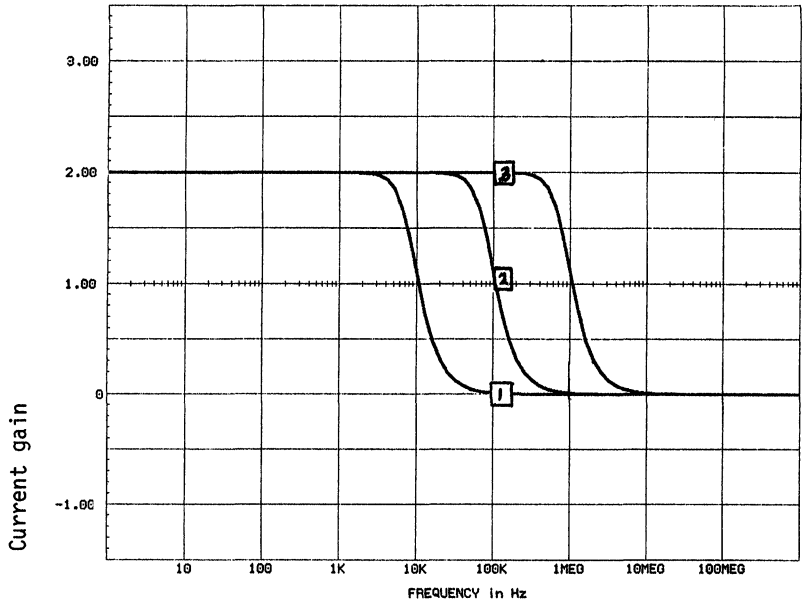

(b)

1: I_{o1}= 1 uA 2: I_{o1}= 10 uA 3: I_{o1}= 100 uA

FIGURE 2 (Continued).

From Eqs. (7 and 8) it is easy to show that the sensitivities of the parameters ω_o and Q_o are

$$S_{R_{x1}}^{\omega_o} = S_{R_{x2}}^{\omega_o} = S_{R_{x5}}^{\omega_o} = S_{C_1}^{\omega_o} = S_{C_2}^{\omega_o} = -S_{R_{x3}}^{\omega_o} = -\frac{1}{2}$$

and

$$S_{R_{x2}}^{\omega_o/Q_o} = -S_{R_{x3}}^{\omega_o/Q_o} = S_{R_{x4}}^{\omega_o/Q_o} = S_{C_2}^{\omega_o/Q_o} = -1$$

all of which are small.

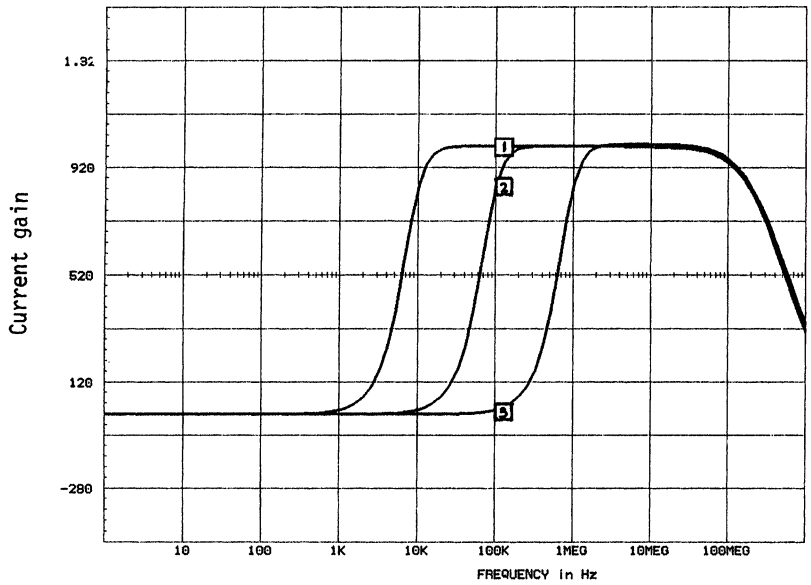

(c)

1: I_{o1}= 1 uA 2: I_{o1}= 10 uA 3: I_{o1}= 100 uA

FIGURE 2 (Continued).

SIMULATION RESULTS

The universal filter circuit of Figure 1(b) has been simulated using the ICAPS circuit simulation program. The CCCII± have been simulated using the schematic implementation of [20] with dc supply voltage = ±2.5 V. The results obtained are shown in Figure 2 for the bandpass filter with $C_1 = C_2 = 1000$pF, $I_{o1} = I_{o2} = 1\mu$A, 10μA, 100μA, $I_{o3} = 100\mu$A, $I_{o4} = I_{o5} = 50\,\mu$A and input current $I_2 = 1\mu$A, for the lowpass filter with $C_1 = C_2 = 1000$pF, $I_{o1} = I_{o2} = 1\mu$A, 10 μA, 100 μA, $I_{o3} = I_{o4} = 100\,\mu$A, $I_{o5} = 50\,\mu$A and input current $I_1 = 1\mu$A, and for the highpass filter with $C_1 = C_2 = 1000$pF, $I_{o1} = I_{o2} = 1\mu$A, 10μA, 100μA, $I_{o3} = 100\,\mu$A $= I_{o4} = 100\,\mu$A, $I_{o5} = 50\,\mu$A. and input current $I_3 = 1\mu$A. The results obtained by simulation are in fairly good agreement with the presented theory.

CONCLUSION

A new universal second-order current-mode filter has been presented. The proposed filter uses the current-controlled current-conveyor and enjoys the following advantages:

a. current control of the parameters ω_o and ω_o/Q_o of the filters and the gains of the bandpass and the lowpass filters.
b. independent control of the parameter ω_o without disturbing the parameter ω_o/Q_o and the bandpass and the lowpass gains.
c. independent current control of the bandpass gain without disturbing the parameter ω_o.
d. independent current control of the lowpass gain without disturbing the parameter ω_o/Q_o.
e. low sensitivities of the parameters ω_o and ω_o/Q_o.

References

[1] Chang, C.-M. and Chen, P. C. (1991). Universal active filter with current gain using OTAs, *International Journal of Electronics*, **71**, 805–808.
[2] Nawrocki, R. and Klein, U. (1986). New OTA-capacitor realization of a universal biquad, *Electronics Letters*, **22**, 50–51.
[3] Sanchez-Sinencio, E., Geiger, R. L. and Navarez-Lozano, H. (1988). Generation of continuous-time two integrator loop OTA filter structures, *IEEE Transactions on Circuits and Systems*, **35**, 936–945.
[4] Wu, J. and Xie, C.-Y. (1933). New multifunction active filter using OTAs, *International Journal of Electronics*, **74**, 235–239.
[5] Sun, Y. and Filder, J. K. (1993). Novel OTA-C realization of biquadratic transfer functions, *International Journal of Electronics*, **75**, 333–340.
[6] Sun, Y. and Fidler, J. K. (1994). Versatile active biquad based on second-generation current conveyors, *International Journal of Electronics*, **76**, 91–98.
[7] Chang, C.-M., Chien, C.-C. and Wang, H.-Y. (1994). Universal active current filter with three inputs using current conveyors-Part 2, *International Journal of Electronics*, **76**, 87–89.
[8] Chang, C.-M., Chien, C.-C. and Wang, H.-Y. (1993). Universal active current filters using single second-generation current conveyor, *Electronics Letters*, **29**, 1159–1160.
[9] Chang, C.-M. (1991). Universal active current filters using single second-generation current conveyor, *Electronics Letters*, **27**, 1614–1617.
[10] Chang, C.-M. (1991). Current mode allpass/notch and bandpass filter using single CCII, *Electronics Letters*, **27**, 1812–1813.
[11] Chang, C.-M. (1993). Universal active current filter with single input and three outputs using CCIIs, *Electronics Letters*, **29**, 1932–1933.
[12] Chang, C.-M. (1993). Novel universal current-mode filter with single input and three outputs using five current conveyors, *Electronics Letters*, **29**, 2005–2006.
[13] Chang, C.-M. (1993). Current-mode lowpass, bandpass and highpass biquads using two CCIIs, *Electronics Letters*, **29**, 2020–2021.

[14] Roberts, G. W. and Sedra, A. S. (1992). A general class of current amplifier-based biquadratic filter circuits, *IEEE Transactions on Circuits and Systems*, **39**, 257–263.
[15] Chang, C.-M. and Chen, P.-C. (1991). Universal active current filter with three inputs and one output using current conveyors, *International Journal of Electronics*, **71**, 817–819.
[16] Wu, D.-S., Hwang, Y.-S., Liu, S.-I. and Wu, Y.-P. (1994). New multifunction filter using an inverting CCII and a voltage follower, *Electronics Letters*, **30**, 551–552.
[17] Senani, R. (1992). New current-mode biquad filter, *International Journal of Electronics*, **73**, 735–742.
[18] Chang, C.-M., Tu, S.-H. and Yieh, P.-W. (1994). Synthesis of analog signal filtering circuits using second-generation current conveyors, *Proceedings National Science Council*, ROC(A), **18**, 421–427.
[19] Horng, J.-W., Lee, M.-H. and Hou, C.-L. (1995). Universal active filter using four OTAs and one CCII, *International Journal of Electronics*, **78**, 903–906.
[20] Fabre, A., Saaid, O., Wiest, F. and Boucheron, C. (1996). High frequency applications based on a new current controlled conveyor, *IEEE Transactions on Circuits and Systems-I: Fundamental Theory and Applications*, **43**, 82–91.
[21] Fabre, A., Saaid, O., Wiest, F. and Boucheron, C. (1995). Current controlled bandpass filter based on translinear conveyors, *Electronics Letters*, **31**, 1727–1728.