Hindawi Publishing Corporation
Active and Passive Electronic Components
Volume 2010, Article ID 785631, 5 pages
doi:10.1155/2010/785631

Research Article

Voltage/Current-Mode Multifunction Filters Using Current-Feedback Amplifiers and Grounded Capacitors

Jiun Wei Horng, Pei-Young Chou, and Jian-Yu Wu

Department of Electronic Engineering, Chung Yuan Christian University, Chung-Li 32023, Taiwan

Correspondence should be addressed to Jiun Wei Horng, jwhorng@cycu.edu.tw

Received 17 October 2009; Revised 15 April 2010; Accepted 16 April 2010

Academic Editor: Ashok Goel

One configuration for realizing voltage-mode multifunction filters and another configuration for realizing current-mode multifunction filters each using two current-feedback amplifiers (CFAs) are presented. The proposed voltage-mode circuit exhibits simultaneously lowpass, bandpass, and highpass filters. The proposed current-mode circuit also exhibits simultaneously lowpass, bandpass, and highpass filters. The proposed circuits offer the following features: no requirements for component matching conditions, low active and passive sensitivities, employing only grounded capacitors, and the ability to obtain multi-function filters from the same circuit configuration.

1. Introduction

The applications and advantages in the realization of active filter transfer functions using current-feedback amplifiers (CFAs) have received considerable attention. This amplifier can provide constant bandwidth (independent of closed-loop gain) and a high slew-rate capability. Thus, it is beneficial to use a CFA as a basic building block to realize various analogue signal-processing circuits.

In 1992 [1], Fabre proposed a voltage-mode bandpass and highpass filters circuit by using two CFAs, one grounded capacitor, one floating capacitor, and three resistors. In 1993 [2], Fabre proposed another voltage-mode or current-mode biquads. The voltage-mode biquad exhibits simultaneously bandpass and highpass filters by using one CFA, one grounded capacitor, one floating capacitor, and two resistors. The current-mode biquad exhibits simultaneously bandpass and highpass filters by using one CFA, two grounded capacitors, and two resistors. In 1995 [3], Liu proposed four voltage-mode biquads with high input impedance for realization lowpass, bandpass or highpass filters by using two CFAs, two (or three) capacitors, and three (or two) resistors. However, only one filter function can be obtained in each realization. Moreover, two topologies of Liu's circuits used floating capacitors.

In 1996 [4], Soliman proposed many voltage-mode biquadratic filter circuits. The four two-CFAs biquads in [4] realize lowpass and bandpass filters simultaneously and using only grounded capacitors. The two three-CFAs biquads in [4] realize lowpass, bandpass, and highpass filters simultaneously and using only grounded capacitors. In 1997 [5], Horng and Lee proposed a voltage-mode biquad for realizing lowpass, bandpass, and highpass filters simultaneously by using three CFAs, three grounded capacitors and four resistors. In 1998 [6], Senani proposed another voltage-mode biquad for realizing lowpass, bandpass and highpass filters simultaneously by using three CFAs, two grounded capacitors and four resistors.

In this paper, a new configuration is proposed to realize voltage-mode lowpass, bandpass, and highpass filters simultaneously by using two CFAs, two grounded capacitors, and five resistors. One (or two) more filtering signal can be obtained with respect to the previous two-CFAs biquads in [1, 3, 4]. With respect to the voltage-mode three-CFAs lowpass, bandpass, and highpass biquads in [4–6], the proposed circuit uses one less active component.

A new configuration is proposed to realize current-mode lowpass, bandpass and highpass filters simultaneously. One more filtering signal can be obtained with respect to the previous current-mode biquad in [2]. Critical component

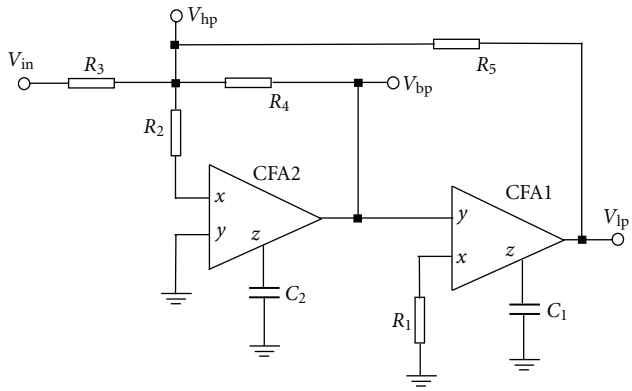

Figure 1: The proposed voltage-mode lowpass, bandpass and highpass filter.

matching conditions are not required in the design of all proposed circuits.

2. Voltage-Mode Filters

Using standard notation, the port relations of a CFA can be characterized by $V_x = V_y, V_o = V_z, I_z = I_x$, and $I_y = 0$. The proposed voltage-mode circuit is shown in Figure 1. The output transfer functions of Figure 1 can be expressed as

$$\frac{V_{lp}}{V_{in}} = \frac{-G_1G_2G_3}{s^2C_1C_2(G_2+G_3+G_4+G_5)+sC_1G_2G_4+G_1G_2G_5},$$
$$\frac{V_{bp}}{V_{in}} = \frac{-sC_1G_2G_3}{s^2C_1C_2(G_2+G_3+G_4+G_5)+sC_1G_2G_4+G_1G_2G_5},$$
$$\frac{V_{hp}}{V_{in}} = \frac{s^2C_1C_2G_3}{s^2C_1C_2(G_2+G_3+G_4+G_5)+sC_1G_2G_4+G_1G_2G_5}. \quad (1)$$

Thus, the circuit realizes an inverting lowpass signal at V_{lp}, an inverting bandpass signal at V_{bp}, and a noninverting highpass signal at V_{hp}, simultaneously. The circuit employs two grounded capacitors, five resistors and only two CFAs. Critical component matching conditions are not required. The output terminals of V_{lp} and V_{bp} can be directly connected to the next stage, respectively. The various parameter values of Figure 1 are given by

$$\omega_o = \sqrt{\frac{G_1G_2G_5}{C_1C_2(G_2+G_3+G_4+G_5)}},$$
$$\frac{\omega_o}{Q} = \frac{G_2G_4}{C_2(G_2+G_3+G_4+G_5)}, \quad (2)$$
$$Q = \frac{1}{G_4}\sqrt{\frac{C_2G_1G_5(G_2+G_3+G_4+G_5)}{C_1G_2}}.$$

The gain constants are

$$H_{o(\mathrm{lp})} = -\frac{G_3}{G_5}, \quad H_{o(\mathrm{bp})} = -\frac{G_3}{G_4},$$
$$H_{o(\mathrm{hp})} = \frac{G_3}{G_2+G_3+G_4+G_5}. \quad (3)$$

One possible design equations for the specified ω_o and Q can be obtained by

$$G_1 = \frac{Q^2G_5}{4},$$
$$C_1 = C_2 = \frac{QG_5}{4\omega_o}, \quad (4)$$
$$G_2 = G_3 = G_4 = G_5.$$

Under the design (4), the gain constants of Figure 1 become

$$H_{o(\mathrm{lp})} = -1, \quad H_{o(\mathrm{bp})} = -1 \quad H_{o(\mathrm{hp})} = \frac{1}{4}. \quad (5)$$

All capacitors are grounded in Figure 1. The use of grounded capacitors is particularly attractive for integrated circuit implementation [7]. Moreover, the two capacitors in Figure 1 are connected to the z terminals of the CFAs this design offers another features of (i) a direct incorporation of the parasitic compensation capacitance (C_p) as a part of the main capacitance, and (ii) operation of the proposed circuit in Figure 1 as external-capacitor-less active-R biquad by deleting the external capacitors and accounting only the parasitic compensating capacitors (C_p) into the design [6]. Note that while cascading the highpass signal of Figure 1 to next stage, other buffering device is needed because the output impedance V_{hp} in Figure 1 is not small.

Taking into account the tracking errors of CFAs, namely $V_x = \beta(s)V_y, V_o = \gamma(s)V_z$, and $I_z = \alpha(s)I_x$, where $\alpha(s)$ and $\beta(s)$ represent the frequency transfers of the internal current and voltage followers of the CFA, respectively, and $\gamma(s)$ represents the frequency transfer of the output voltage follower of the CFA. They can be approximated by the first-order lowpass functions [2]. Assume that the circuits are working at frequencies much less than the corner frequencies of $\alpha(s)$, $\beta(s)$, and $\gamma(s)$, that is, $\beta = 1-\varepsilon_1$ and $\varepsilon_1(|\varepsilon_1| \ll 1)$ is the input voltage tracking error, and $\gamma = 1-\varepsilon_2$ and $\varepsilon_2(|\varepsilon_2| \ll 1)$ is the output voltage tracking error, $\alpha = 1-\varepsilon_3$ and $\varepsilon_3(|\varepsilon_3| \ll 1)$ is the current tracking error of a CFA. The resonance angular frequency ω_o, bandwidth ω_0/Q, and quality factor Q of Figure 1 become

$$\omega_o = \sqrt{\frac{G_1G_2G_5\alpha_1\alpha_2\beta_1\gamma_1\gamma_2}{C_1C_2(G_2+G_3+G_4+G_5)}},$$
$$\frac{\omega_o}{Q} = \frac{G_2G_4\alpha_2\gamma_2}{C_2(G_2+G_3+G_4+G_5)}, \quad (6)$$
$$Q = \frac{1}{G_4}\sqrt{\frac{C_2G_1G_5\alpha_1\beta_1\gamma_1(G_2+G_3+G_4+G_5)}{C_1G_2\alpha_2\gamma_2}}.$$

The active and passive sensitivities in Figure 1 can be calculated from (6) and found to be less than unity.

3. Current-Mode Filters

The proposed current-mode circuit is shown in Figure 2. The output transfer functions of Figure 2 can be expressed as

$$\frac{I_{\text{lp}}}{I_{\text{in}}} = \frac{-G_1G_2G_6}{s^2C_1C_2(G_2+G_3+G_4+G_5)+sC_1G_2G_4+G_1G_2G_5},$$
$$\frac{I_{\text{bp}}}{I_{\text{in}}} = \frac{-sC_1G_1G_2}{s^2C_1C_2(G_2+G_3+G_4+G_5)+sC_1G_2G_4+G_1G_2G_5},$$
$$\frac{I_{\text{hp1}}}{I_{\text{in}}} = \frac{s^2C_1C_2G_3}{s^2C_1C_2(G_2+G_3+G_4+G_5)+sC_1G_2G_4+G_1G_2G_5},$$
$$\frac{I_{\text{hp2}}}{I_{\text{in}}} = \frac{-s^2C_1C_2G_2}{s^2C_1C_2(G_2+G_3+G_4+G_5)+sC_1G_2G_4+G_1G_2G_5}. \tag{7}$$

Thus, the circuit realizes an inverting lowpass signal at I_{lp}, an inverting bandpass signal at I_{bp}, a noninverting highpass signal at I_{hp1}, and an inverting highpass signal at I_{hp2}, simultaneously. The resonance angular frequency ω_o, bandwidth ω_o/Q, and quality factor Q have the same values as in (6). The gains of Figure 2 are

$$H_{\text{o(lp)}} = -\frac{G_6}{G_5}, \quad \text{H}_{\text{o(bp)}} = -\frac{G_1}{G_4}, \quad \text{H}_{\text{o(hp1)}} = \frac{G_3}{G_2+G_3+G_4+G_5} \quad H_{\text{o(hp2)}} = \frac{-G_2}{G_2+G_3+G_4+G_5}. \tag{8}$$

Because the output currents are flowing in grounded elements, additional current followers are required for sensing and taking out the output currents. The active and passive sensitivities in Figure 2 can be calculated as in voltage-mode circuit and were found to be less than unity.

4. Nonideal Equivalent Circuit of CFA

The nonideal equivalent circuit model of the CFA is shown in Figure 3, where R_x is the x terminal input resistance, $R_y//(1/sC_y)$ represents the y terminal parasitic input impedance, and $R_p//(1/sC_p)$ represents the parasitic impedance at the compensation terminal z [2]. The typical data sheet values of the various parasitics for the bipolar CFAs (such as AD844) are $R_x = 50\,\Omega$, $C_p = 5.5$ pF, $R_p = 3\,\text{M}\Omega$, $\text{R}_y = 2\,\text{M}\Omega$ and $C_y = 2$ pF. When non-ideal equivalent circuit model of the CFAs used instead of ideal ones and assuming the circuits are working at frequencies much less than the corner frequencies of α(s), β(s), and γ(s), namely, $\alpha \cong \beta \cong \gamma \cong 1$, the voltage transfer functions of Figure 1 become

$$\frac{V_{\text{lp}}}{V_{\text{in}}} = \frac{-G_1'G_2'G_3}{D(s)} \tag{9}$$

$$\frac{V_{\text{bp}}}{V_{\text{in}}} = \frac{-\left(sC_1'G_2'G_3+G_2'G_3G_{p1}\right)}{D(s)}, \tag{10}$$

$$\frac{V_{\text{hp}}}{V_{\text{in}}} = \frac{s^2C_1'C_2'G_3+sC_1'G_3G_{p2}+sC_2'G_3G_{p1}+G_3G_{p1}G_{p2}}{D(s)} \tag{11}$$

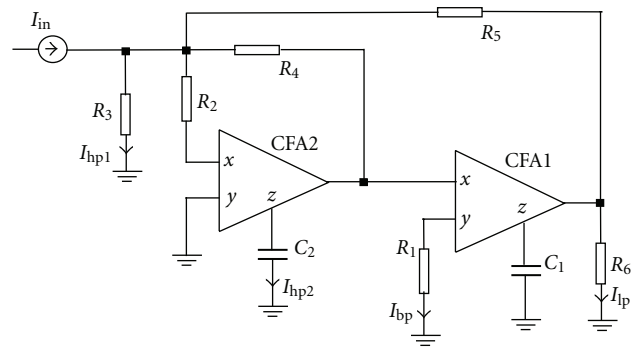

Figure 2: The proposed current-mode filter.

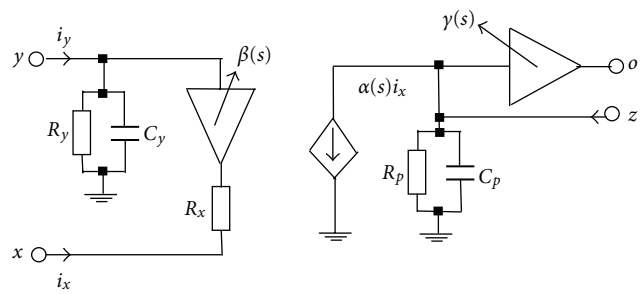

Figure 3: Nonideal equivalent circuit of the CFA includes the parasitic impedances.

where

$$\begin{aligned} D(s) = {} & s_2C_1'C_2'(G_2' + G_3+G_4+G_5) \\ & + s\Big[C_1'G_2'G_4 + C_1'G_{p2}(G_2'+G_3+G_4+G_5) \\ & \quad + G_2'G_{p1}(C_2'+G_3+G_4+G_5)\Big] \\ & + G_1'G_2'G_5 + G_2'G_4G_{p1} + G_{p1}G_{p2}(G_2'+G_3+G_4+G_5), \end{aligned} \tag{12}$$

$$G_1' = 1/(R_1 + R_{x1}); \quad G_2' = 1/(R_2 + R_{x2}); \quad C_1' = C_1 + C_{p1}; \quad C_2' = C_2 + C_{p2} \tag{13}$$

From (9) to (11), undesirable factors are yielded by the effects of CFAs' parasitic impedances. It is found that such factors can be made negligible by operating the filters in high frequencies. But, if the filters are used for lower frequencies, the parasitic impedances could not be negligible. So the characteristics will depart from the theoretical values, especially for the highpass and bandpass filter signals in Figure 1.

Note that the influence of the parasitic elements on the frequency responses of the current-mode filters in Figure 2 can be studied by a similar procedure, as above.

5. Experimental results

Experiments were carried out to demonstrate the feasibility of the proposed circuit. The CFAs were implemented using

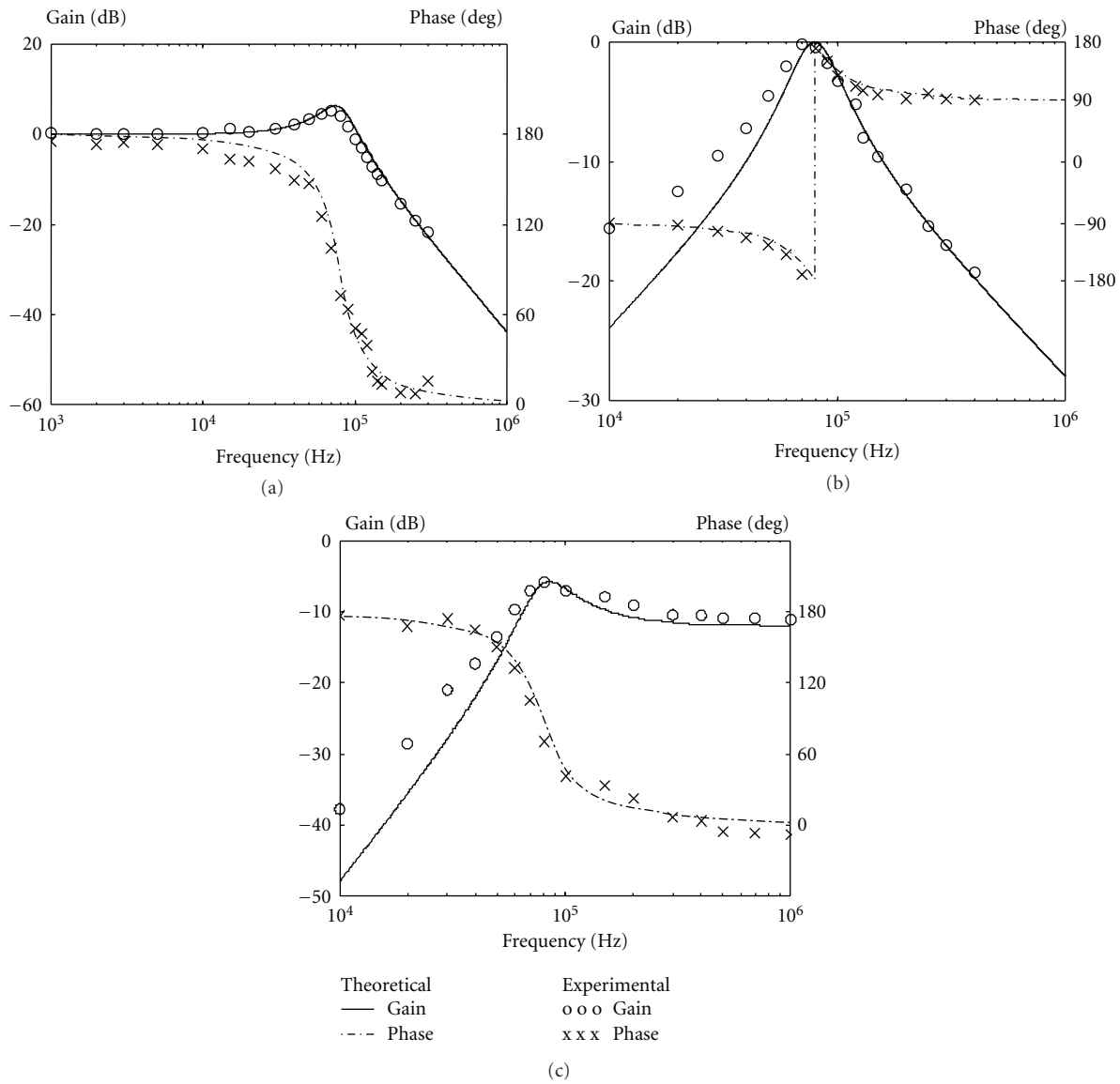

Figure 4: Experimental frequency responses of Figure 1 design with $C_1 = C_2 = 100\,\text{pF}$ and $R_1 = R_2 = R_3 = R_4 = R_5 = 10\,\text{k}\Omega$: (a) lowpass filter (V_{lp}), (b) bandpass filter (V_{bp}), and (c) highpass filter (V_{hp}).

AD844s. Figures 4(a), 4(b), and 4(c) represent the frequency responses for the lowpass, bandpass, and highpass filters of Figure 1, respectively, designed with $C_1 = C_2 = 100\,\text{pF}$ and $R_1 = R_2 = R_3 = R_4 = R_5 = 10\,\text{k}\Omega$. Experimental results confirm the theoretical analysis.

6. Conclusions

In this paper, a configuration for realizing voltage-mode multi-function filters and another configuration for realizing current-mode multi-function filters using CFAs are presented. The proposed voltage-mode circuit exhibits simultaneously lowpass, bandpass and highpass filters by using two CFAs, two grounded capacitors, and five resistors. The proposed current-mode circuit exhibits simultaneously lowpass, bandpass, and highpass filters by using two CFAs, two grounded capacitors, and six resistors. The proposed circuits have no requirements for component matching conditions. The active and passive sensitivities are low.

Acknowledgment

The authors would like to thank the anonymous reviewers for their constructive criticisms to improve the manuscript.

References

[1] A. Fabre, "Gyrator implementation from commercially available transimpedance operational amplifiers," *Electronics Letters*, vol. 28, no. 3, pp. 263–264, 1992.

[2] A. Fabre, "Insensitive voltage-mode and current-mode filters from commercially available transimpedance opamps," *IEE Proceedings G*, vol. 140, no. 5, pp. 319–321, 1993.
[3] S. I. Liu, "High input impedance filters with low component spread using current-feedback amplifiers," *Electronics Letters*, vol. 31, no. 13, pp. 1042–1043, 1995.
[4] A. M. Soliman, "Applications of the current feedback operational amplifiers," *Analog Integrated Circuits and Signal Processing*, vol. 11, no. 3, pp. 265–302, 1996.
[5] J.-W. Horng and M.-H. Lee, "High input impedance voltage-mode lowpass, bandpass and highpass filter using current-feedback amplifiers," *Electronics Letters*, vol. 33, no. 11, pp. 947–948, 1997.
[6] R. Senani, "Realization of a class of analog signal processing/signal generation circuits: novel configurations using current feedback Op-Amps," *Frequenz*, vol. 52, no. 9-10, pp. 196–206, 1998.
[7] M. Bhushan and R. W. Newcomb, "Grounding of capacitors in integrated circuits," *Electronic Letters*, vol. 3, no. 4, pp. 148–149, 1967.