Hindawi Publishing Corporation
International Journal of Antennas and Propagation
Volume 2013, Article ID 282373, 6 pages
http://dx.doi.org/10.1155/2013/282373

Research Article

A Novel Ultrawideband Planar Inverted-F Antenna with Capacitive Ground Plane

Haixia Liu, Fei Wang, Yang Yang, Xiaowei Shi, and Long Li

School of Electronic Engineering, Xidian University, Xi'an 710071, China

Correspondence should be addressed to Long Li; longliee@foxmail.com

Received 30 December 2012; Revised 30 March 2013; Accepted 6 April 2013

Academic Editor: Tzyh-Ghuang Ma

With the trend of the miniaturization, broadband, and integration of multisystems of wireless communication terminals, a new ultrawideband planar inverted-F antenna (PIFA) with capacitive ground plane is proposed in this paper. The capacitive ground plane is composed of a sheet of metal islands, which makes a major contribution to ultra-wideband from 2.3 GHz to 9.0 GHz by applying the capacitive compensation for input impedance of the PIFA in high-order modes frequency bands. The effect of geometric parameters of capacitive ground plane and antenna height on antenna performance is analyzed. It is found that the radiation pattern in free space and the gain of the proposed antenna also meet the demands of the wireless communication terminals. The reported antenna was fabricated and measured, and the experimental results are in good agreement with the simulation results.

1. Introduction

To expand the capacity of communication system or achieve a multimode communication, a real communication system is required to be implemented with multiband or wideband characteristics. Therefore, it is important to develop a wideband antenna for wireless communication terminal equipments which are usually limited in a confined space for antennas. A compact wideband mobile handset or wireless data card multiple-input multiple-output (MIMO) antenna for long term evolution (LTE) applications especially has been a challenging problem. A planar inverted-F antenna (PIFA) is widely used in mobile devices because of its advantages of compact size, low profile, and easy integration with portable devices. However, the narrow impedance bandwidth of a conventional PIFA is difficult for wideband and ultrawideband applications. Hence, it is most desirable to find methods which can improve the bandwidth of the PIFA antenna for multiband or wideband applications. A tapered-type radiating patch [1] and multilayer patches [2] are introduced into the internal PIFA to enhance its bandwidth. U-shaped slits are inserted into the antenna-radiating surface to realize a quad-band PIFA [3]. Parasitic elements are often added to a PIFA to radiate more frequency bands [4]. A T-shaped ground plane is proposed to broaden the bandwidth of the PIFA [5]. A slotted ground plane for handset devices is described to lower the profile and improve the bandwidth of PIFA antennas [6–17].

In this paper, we propose a novel ultrawideband PIFA with capacitive ground plane which consists of a sheet of periodic metal patches. By applying the capacitive compensation for the input impedance of the PIFA in higher frequencies, the proposed PIFA has a broad working frequency band. The effect of geometric parameters of the periodic metal patches and antenna height on antenna performance is analyzed. It is found that the radiation pattern in free space and gain of the proposed antenna also meet the demands of the broadband wireless communication terminals. Good agreement of the measurement with simulation results can be observed.

2. Analysis and Design of Ultrawideband PIFA

Figure 1 shows the geometry of a conventional PIFA. The dimension of the radiating patch is 38 mm × 25 mm, and the ground plane is a traditional solid metal surface with

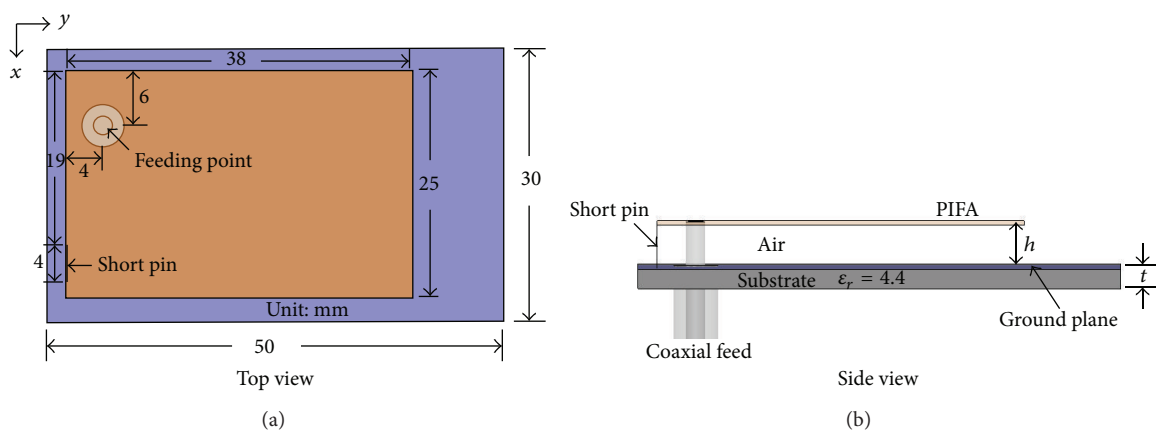

Figure 1: Geometry of a conventional PIFA.

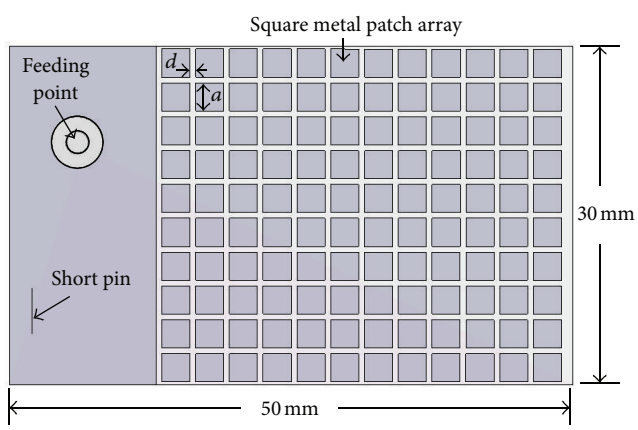

Figure 2: Capacitive ground plane composed of a sheet of periodic metal square patches.

50 mm × 30 mm. The height of the antenna is h. The locations of the feeding point and short pin are shown in Figure 1. In this paper, the antenna structure and dimension are kept the same as in Figure 1; the traditional ground plane would be changed to a capacitive ground plane for bandwidth enhancement. The capacitive ground plane is composed of a sheet of periodic metal patches [18], as shown in Figure 2. The width of the metal patch is w, and the gap width between two metal square patches is g. Thus, the period of the patch element of the designed capacitive ground plane is $a = w + g$. This structure is often called a frequency selective surface. If the metal plates are not connected, it is called a "capacitive" surface, and it transmits low frequencies while reflecting high frequencies [18]. The substrate dielectric has a relative permittivity of $\varepsilon_r = 4.4$ and a loss tangent of 0.013. The thickness of the substrate of the capacitive surface is $t = 2.0$ mm. It should be pointed out that the periodicity is flexible to design a capacitive surface.

Parametric studies were performed to analyze the effects of the capacitive ground plane structure parameters on the antenna performance. It is worth pointing out that the radiating patch and the positions of feeding point and short pin are kept constant. Here we only pay attention to the contribution from the proposed capacitive ground plane. Figures 3(a), 3(b), 3(c), and 3(d) show the frequency characteristics and effect of period a, radiating patch height h, substrate permittivity and thickness on the S_{11} of the PIFA, respectively. Note that, when the value of one parameter was changed, such as when the period a was changed from 3.0 mm to 9.0 mm, the values of other parameters were kept the same as shown in Figure 1. It can be seen from Figure 3 that the implementation of replacing the conventional ground plane with the capacitive surface will produce an important influence on the PIFA over the wide frequency band. According to the parametric analysis, we can determine the favorable design parameters: $a = 3.0$ mm, $h = 3.5$ mm, $\varepsilon_r = 4.4$, and $t = 2.0$ mm. In this case, the designed PIFA has an ultrawideband working frequency band (less than −10 dB) from 2.3 GHz to 9.0 GHz, and the relative bandwidth is up to 118%, as the solid line shown in Figure 3.

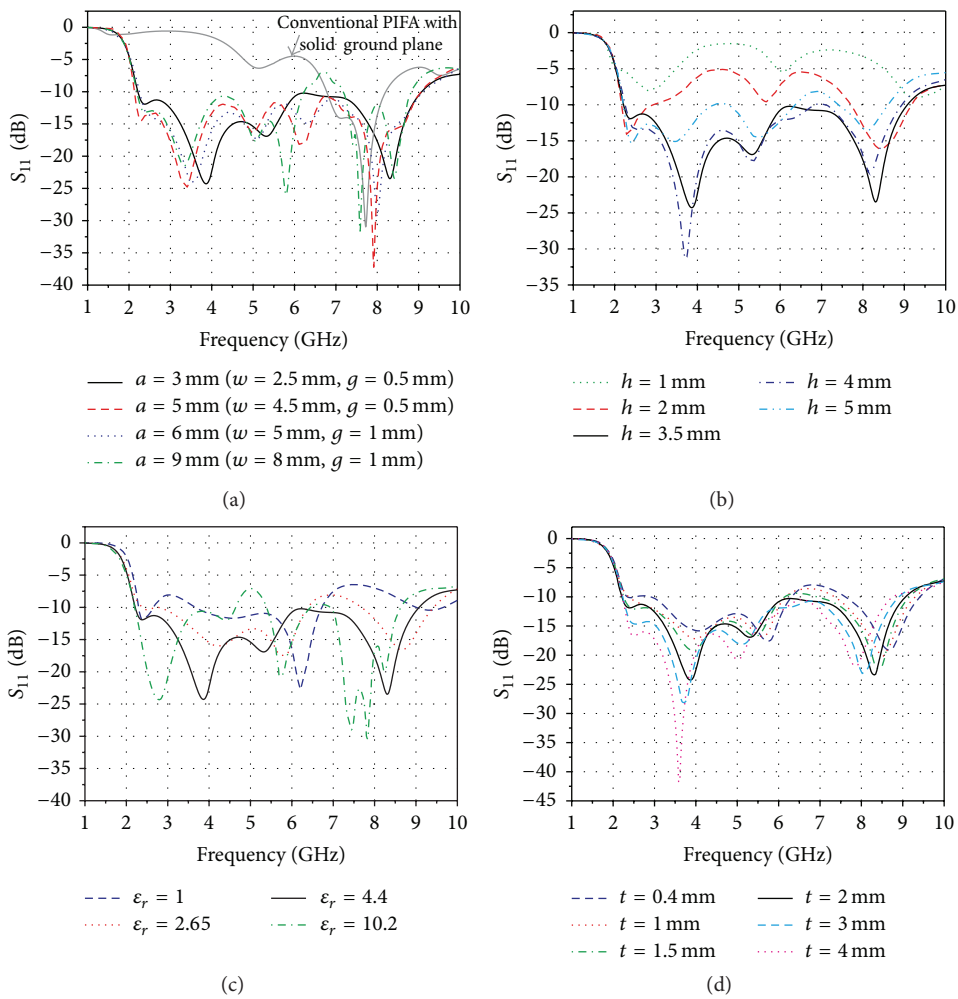

FIGURE 3: Parametric analyses of the effect of capacitive ground plane on the return loss of the PIFA. (a) Period a effect (h = 3.5 mm, ε_r = 4.4, and t = 2.0 mm), (b) radiating patch height h effect (a = 3.0 mm, ε_r = 4.4, and t = 2.0 mm), (c) substrate permittivity ε_r effect (a = 3.0 mm, h = 3.5 mm, and t = 2.0 mm), and (d) substrate thickness h effect (a = 3.0 mm, ε_r = 4.4, and h = 3.5 mm). The S_{11} of the conventional PIFA with a solid ground plane is also given in (a).

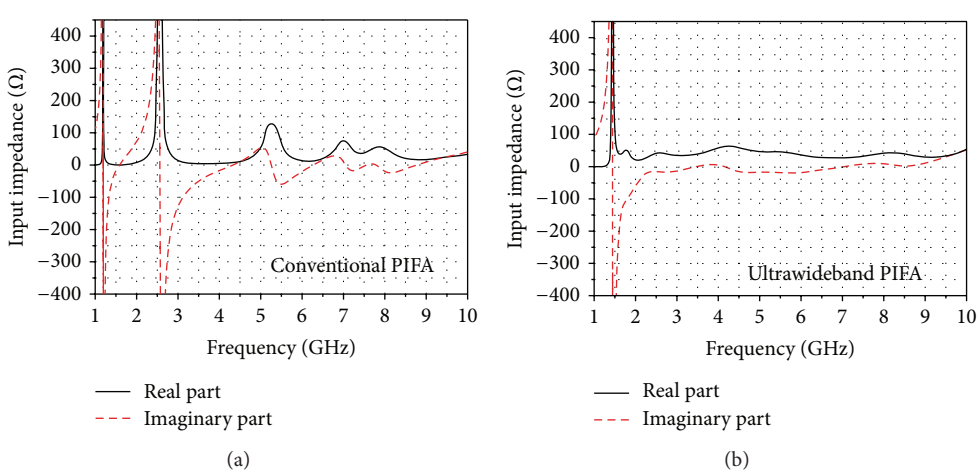

FIGURE 4: Comparison of the input impedance characteristics of the conventional PIFA with solid ground plane and the proposed ultrawideband PIFA with capacitive ground plane.

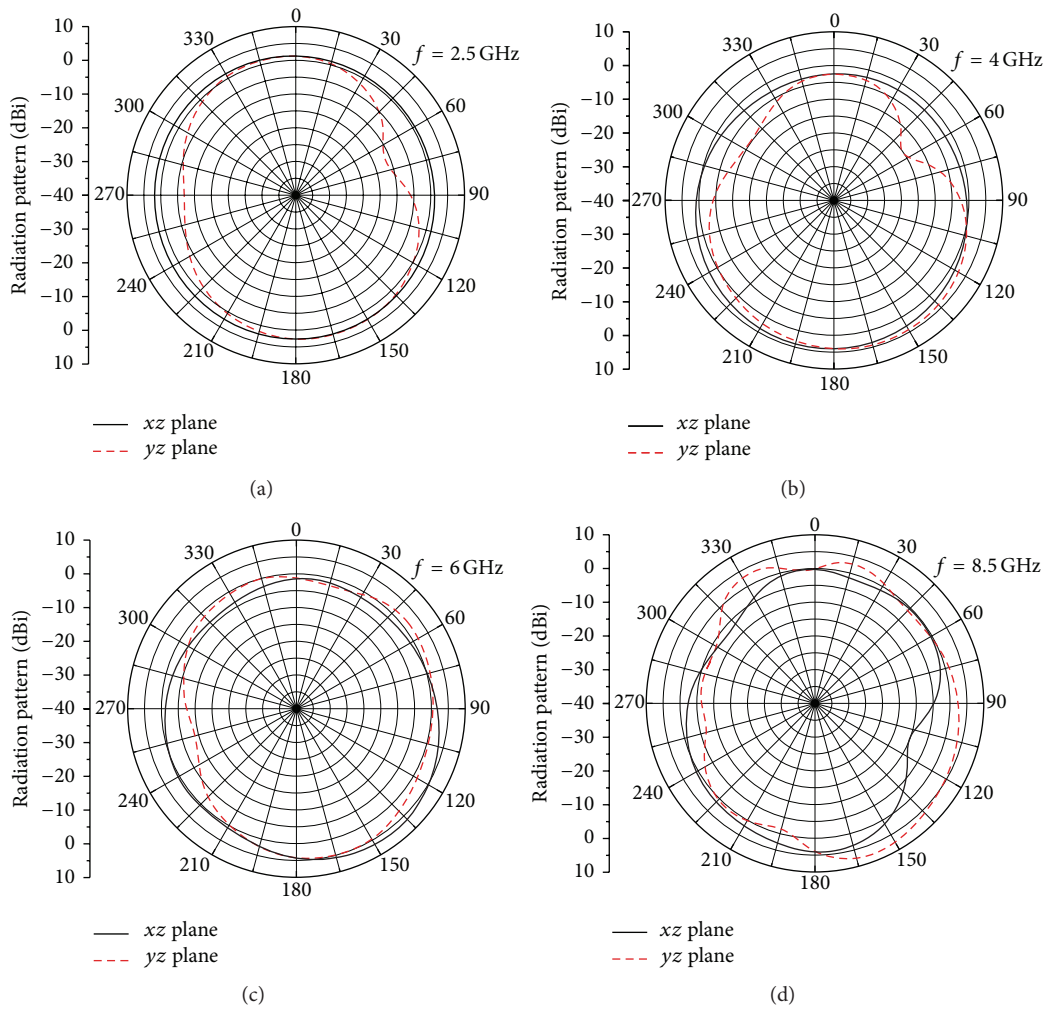

Figure 5: Radiation patterns of the ultrawideband PIFA: (a) 2.5 GHz, (b) 4.0 GHz, (c) 6.0 GHz, and (d) 8.5 GHz.

Furthermore, we analyzed and compared the input impedance characteristics of and between the proposed PIFA and conventional antennas, as shown in Figure 4. It can be seen that the parallel resonance at 2.5 GHz disappears due to the compensation of the capacitive ground plane. Moreover, the radiating impedance at high frequency increases, which indicates that the proposed PIFA achieves not only wide bandwidth but also high radiating efficiency.

Figure 5 shows the radiation patterns of the ultrawideband PIFA at 2.5 GHz, 4.0 GHz, 6.0 GHz, and 8.5 GHz, respectively. It can be seen that these radiation patterns at *xz* and *yz* planes are almost omnidirectional, which also meet the demands of the wireless communication terminals. The peak gains are 2.88 dBi, 4.42 dBi, 6.48 dBi, and 7.67 dBi, respectively.

3. Fabrication and Measurement of the Ultrawideband PIFA

According to the designed parameters, the proposed PIFA was fabricated and shown in Figure 6. The radiating patch and short pin are made of a copper sheet with thickness of 0.2 mm. The height of the radiating patch is 3.0 mm. The ground plane is composed of the capacitive surface with the square patch lattice $w = 5.0$ mm, $g = 1.0$ mm, as shown in Figure 6(a). The substrate dielectric has a relative permittivity of 4.6 and a loss tangent of 0.02 with thickness of 2.0 mm. The experiment was conducted by using an Agilent N5230A vector network analyzer. From the comparison of measurement with simulation results shown in Figure 7, it can be seen that the measurement results agree well with the simulation results. Measurement result shows that the working frequency band is from 2.8 to 8.3 GHz, which verifies the correctness and effectiveness of the proposed ultrawideband PIFA antenna.

Furthermore, we apply the ultrawideband PIFA to a wireless mobile phone platform, as shown in Figure 8. The proposed capacitive ground plane is locally embedded into the printed circuit board. The dimension of the PCB is about 100 mm × 50 mm. Figure 9 shows the simulated and measured S_{11} of the proposed PIFA on the mobile phone platform. It can be seen that the PIFA antenna still has good ultrawideband characteristics.

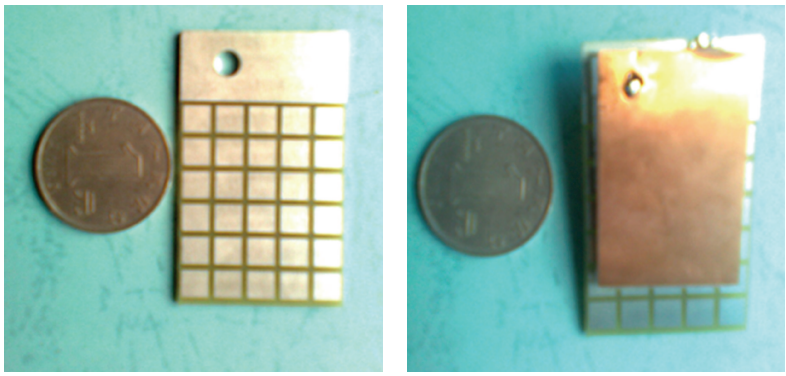

(a) (b)

Figure 6: Fabricated ultrawideband PIFA antenna, (a) capacitive ground plane, and (b) PIFA antenna.

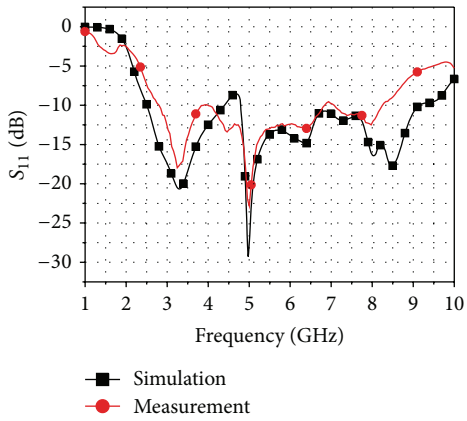

Figure 7: Comparison of measured and simulated S_{11} of the ultrawideband PIFA.

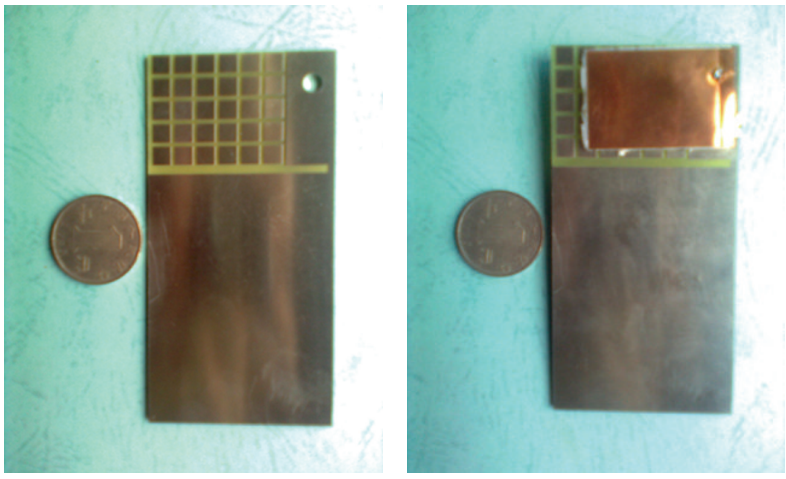

(a) (b)

Figure 8: (a) Capacitive ground plane is locally embedded into the PCB, (b) ultrawideband PIFA on the mobile phone platform.

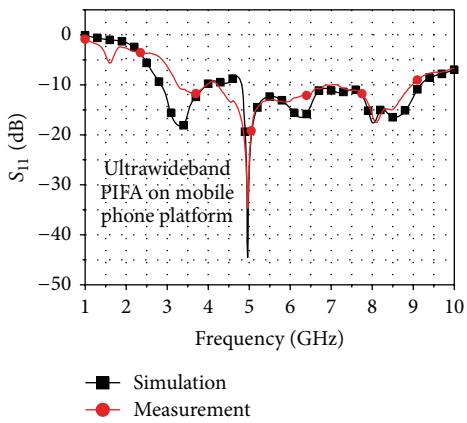

FIGURE 9: Comparison of measured and simulated S_{11} of the ultrawideband PIFA on a mobile phone platform.

4. Conclusion

This paper proposed a new ultrawideband PIFA antenna with a capacitive ground plane which is composed of a sheet of metal periodic patches. By applying the capacitive compensation for input impedance of the PIFA in high frequency bands, the proposed PIFA can work from 2.3 GHz to 9.0 GHz, and the relative bandwidth is up to 118%. The effect of geometric parameters of capacitive ground plane and antenna height on antenna performance was analyzed in detail. It is found that the radiation pattern in free space and the gain of the proposed antenna also meet the demands of the wireless communication terminals. Due to the small dimension of the capacitive ground plane, the proposed ultrawideband PIFA is easily integrated with other systems of wireless communication terminal applications. Simulation and measurement results verify that the proposed PIFA antenna has good ultrawideband characteristics.

Acknowledgments

This work is supported partly by the Program for New Century Excellent Talents in University of China, the National Natural Science Foundation of China under Contract no. 61072017 and no. 61072021, the National Key Laboratory Foundation, the Fundamental Research Funds for the Central Universities, and Foundation for the Returned Overseas Chinese Scholars, State Education Ministry and Shaanxi Province.

References

[1] J. S. Kuo and K. L. Wong, "Dual frequency operation of planar inverted L antenna with tapered patch width," *Microwave and Optical Technology Letters*, vol. 28, no. 2, pp. 126–127, 2001.

[2] K. L. Wong and Y. F. Lin, "Small broadband rectangular microstrip antenna with chip-resistor loading," *Electronics Letters*, vol. 33, no. 19, pp. 1593–1594, 1997.

[3] D. M. Nashaat, H. A. Elsadek, and H. Ghali, "Single feed compact quad-band PIFA antenna for wireless communication applications," *IEEE Transactions on Antennas and Propagation*, vol. 53, no. 8, pp. 2631–2635, 2005.

[4] Y. J. Cho, S. H. Hwang, and S. O. Park, "A dual-band internal antenna with a parasitic patch for mobile handsets and the consideration of the handset case and battery," *IEEE Antennas and Wireless Propagation Letters*, vol. 4, no. 1, pp. 429–432, 2005.

[5] F. Wang, Z. Du, and Q. Wang, "Enhanced-bandwidth PIFA with T-shaped ground plane," *Electronics Letters*, vol. 40, no. 23, pp. 1504–1505, 2004.

[6] C. Picher, J. Anguera, A. Cabedo, C. Puente, and S. Kahng, "Multiband handset antenna using slots on the ground plane: considerations to facilitate the integration of the feeding transmission line," *Progress in Electromagnetics Research C*, vol. 7, pp. 95–109, 2009.

[7] M. F. Abedin and M. Ali, "Modifying the ground plane and its effect on planar inverted-F antennas (PIFAs) for mobile phone handsets," *IEEE Antennas and Wireless Propagation Letters*, vol. 2, pp. 226–229, 2003.

[8] P. Salonen, M. Keskilammi, and M. Kivikoski, "Single-feed dual-band planar inverted-F antenna with U-shaped slot," *IEEE Transactions on Antennas and Propagation*, vol. 48, no. 8, pp. 1262–1264, 2000.

[9] R. Hossa, A. Byndas, and M. E. Bialkowski, "Improvement of compact terminal antenna performance by incorporating open-end slots in ground plane," *IEEE Microwave and Wireless Components Letters*, vol. 14, no. 6, pp. 283–285, 2004.

[10] K. L. Wong, *Compact and Broadband Microstrip Antennas*, Wiley, New York, NY, USA, 2002.

[11] J. Anguera, I. Sanz, A. Sanz et al., "Enhancing the performance of handset antennas by means of groundplane design," in *Proceedings of the IEEE International Workshop on Antenna Technology: Small Antennas and Novel Metamaterials (IWAT '06)*, pp. 29–32, White Plains, NY, USA, March 2006.

[12] A. Byndas, R. Hossa, M. E. Bialkowski, and P. Kabacik, "Investigations into operation of single- and multi-layer configurations of planar inverted-F antenna," *IEEE Antennas and Propagation Magazine*, vol. 49, no. 4, pp. 22–33, 2007.

[13] A. Cabedo, J. Anguera, C. Picher, M. Ribó, and C. Puente, "Multiband handset antenna combining a PIFA, slots, and ground plane modes," *IEEE Transactions on Antennas and Propagation*, vol. 57, no. 9, pp. 2526–2533, 2009.

[14] A. R. Razali and M. E. Bialkowski, "Coplanar inverted-F antenna with open-end ground slots for multiband operation," *IEEE Antennas and Wireless Propagation Letters*, vol. 8, pp. 1029–1032, 2009.

[15] J. Anguera, I. Sanz, J. Mumbrú, and C. Puente, "Multiband handset antenna with a parallel excitation of PIFA and slot radiators," *IEEE Transactions on Antennas and Propagation*, vol. 58, no. 2, pp. 348–356, 2010.

[16] J. Anguera and A. Andújar, "Ground plane contribution in wireless handheld devices using radar cross section analysis," *Progress in Electromagnetics Research M*, vol. 26, pp. 101–114, 2012.

[17] M. A. Peyrot-Solis, G. M. Galvan-Tejada, and H. Jardon-Aguilar, "A novel planar UWB monopole antenna formed on a printed circuit board," *Microwave and Optical Technology Letters*, vol. 48, no. 5, pp. 933–935, 2006.

[18] D. Sievenpiper, *High-impedance electromagnetic surfaces [Ph.D. dissertation]*, Department of Electrical Engineering, University of California at Los Angeles, Los Angeles, Calif, USA, 1999.