Hindawi
International Journal of Antennas and Propagation
Volume 2017, Article ID 1538728, 6 pages
https://doi.org/10.1155/2017/1538728

Research Article

Radio Frequency Fingerprint Extraction Based on Multidimension Permutation Entropy

Shouyun Deng, Zhitao Huang, Xiang Wang, and Guangquan Huang

College of Electronic Science and Engineering, National University of Defense Technology, No. 137, Street Yanwachi, Changsha, China

Correspondence should be addressed to Shouyun Deng; shouyundeng@126.com

Received 8 February 2017; Revised 28 June 2017; Accepted 30 July 2017; Published 28 August 2017

Academic Editor: Symeon Nikolaou

Radio frequency fingerprint (RF fingerprint) extraction is a technology that can identify the unique radio transmitter at the physical level, using only external feature measurements to match the feature library. RF fingerprint is the reflection of differences between hardware components of transmitters, and it contains rich nonlinear characteristics of internal components within transmitter. RF fingerprint technique has been widely applied to enhance the security of radio frequency communication. In this paper, we propose a new RF fingerprint method based on multidimension permutation entropy. We analyze the generation mechanism of RF fingerprint according to physical structure of radio transmitter. A signal acquisition system is designed to capture the signals to evaluate our method, where signals are generated from the same three Anykey AKDS700 radios. The proposed method can achieve higher classification accuracy than that of the other two steady-state methods, and its performance under different SNR is evaluated from experimental data. The results demonstrate the effectiveness of the proposal.

1. Introduction

Just like we each have unique fingerprints, radio transmitters also have different radio frequency fingerprints, namely, RF fingerprints [1, 2]. The RF fingerprints come from differences between hardware components of transmitters, and the differences can be reflected in communication signals. The fingerprints can be extracted by processing transient signal or steady-state signal from received RF signals. The method to obtain transmitter hardware characteristics is called RF fingerprint extraction, and the method to identify individual transmitter with fingerprints is called RF fingerprint identification. The RF fingerprints work in physical layer within transmission devices, so they cannot be destroyed or copied.

RF fingerprint is a popular area of research in recent decades, and it is widely applied in spectrum resource management, wireless equipment safety certification, the mobile phone network protection, and other fields [3]. The fractal dimensions (box dimension and information dimension) were extracted as RF fingerprints to identify 3 FM stations in [4]. Three fingerprint extraction algorithms based on the Hilbert spectrum were introduced in [5]. RF fingerprints based on dual-tree complex wavelet transform (DT-CWT) features were extracted from the nontransient preamble response of OFDM-based 802.11a signals in [6].

In this paper, the inherent nonlinearities of radio transmitters are analyzed, and they can be extracted as RF fingerprints of the signals. As a result, a new RF fingerprinting method based on multidimension permutation entropy is proposed. We design a signal acquisition system to collect signals, and the DSSS signals from the same three radio transmitters are used in identification experiments. The results show that the proposed method is effective in differentiating individual transmitters.

2. Proposed Method

2.1. Generation Mechanism of RF Fingerprinting. Radio transmitter equipment has a complicated structure, and it is composed of many electronic devices [7]. As shown in Figure 1, baseband signal is processed in digital signal processor block and then goes into analog circuit parts. There are many nonlinear elements and unit circuits in analog circuit parts. Examples of nonlinear elements include power amplifier, nonlinear resistors, diodes, transistors, and field-effect tubes.

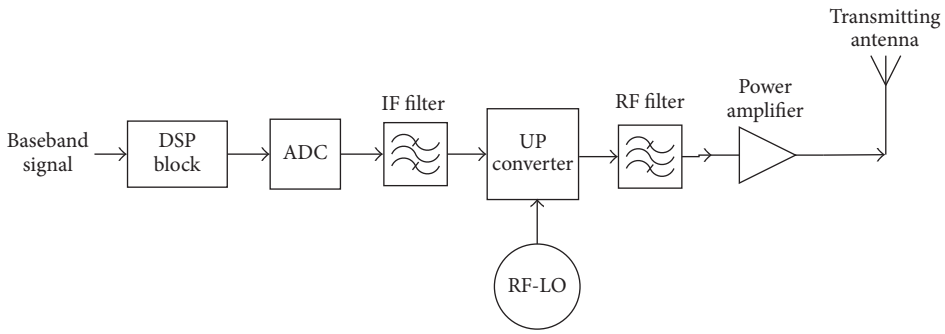

Figure 1: Architecture of radio transmitter.

The unit circuits may contain operational amplifiers, multipliers, absolute value circuits, and so on. The existence of these nonlinear devices makes communication signals have nonlinear components.

Special nonlinear components come from device's tolerance effect, which means that there are a few differences between transmitters produced by the same manufacturers. Even if transmitters have the same modes and production batches, the actual parameters of devices are different, such as oscillator frequency deviation, phase noise, modulation error, nonlinear distortion of power amplifier, and filter distortion. These hardware tolerances are the material basis of RF fingerprint. While in the process of circuit design, we usually consider adopting some measures to compensate nonlinear tolerances [8]. But, in fact, no matter what kind of model is adopted, there must be some errors during the establishment of model, so the nonlinear components of signal cannot be completely eliminated. These nonlinear components are unintentional, inevitably, and they are derived from the physical defects in the devices. Each transmitter device has its own characteristics for the reason that these defects are individual and special, so they can be used as RF fingerprints to identify radio transmitters [9].

2.2. Multidimension Permutation Entropy. Permutation entropy algorithm was firstly introduced by Christoph Bandt and Bernd Pompe. Permutation entropy is an appropriate complexity measure for chaotic time series, and it is extremely fast and robust when compared with all known complexity parameters such as zero-crossing rate and Lyapunov exponent [10]. As a signal analysis method of nonlinear theory, it can extract and amplify tiny changes in time series and can fast detect the dynamic mutation in complex systems. In addition, it is easy to be implemented and has strong antinoise ability [11]. Its basic principle is as follows.

The key to the algorithm is phase space reconstruction. It can reconstruct one-dimensional time series into high dimension vectors in multidimensional state space and find motion rules hidden in the whole system. Then consider a discrete time sequence $\{x(i),\ i = 1, 2, \ldots, N\}$ and the phase space reconstruction of it can be calculated as follows:

$$X_i = [x(i), x(i+l), \ldots, x(i+(m-1)l)]. \tag{1}$$

m is the embedding dimension ($m \geq 2$), and l is the time delay. The variable i should be valued as $1 \leq i \leq N-(m-1)l$. And m components of X_i can be ranged in an ascending order:

$$\begin{aligned} X_i = [&x(i+(j_1-1)l) \leq x(i+(j_2-1)l) \leq \cdots \\ &\leq x(i+(j_m-1)l)]. \end{aligned} \tag{2}$$

If two values are equal, for example, when $x(i+(j_{n1}-1)l) = x(i+(j_{n2}-1)l)$, they should be ordered by j value firstly. And then each X_i corresponds to a permutation:

$$\pi_i = [j_1, j_2, \ldots, j_m]. \tag{3}$$

The m independent number is $[1, 2, \ldots, m]$, so the number of arrangement ways is $m!$. In the reconstructed phase space, it is assumed that there are k arrangement ways, and probability of each permutation can be recorded as $p_1, p_2, \ldots, p_k$. According to the definition of Shannon entropy, permutation entropy H_p is defined as

$$H_p = -\sum_{j=1}^{k} p_j \ln p_j. \tag{4}$$

It can usually be normalized by the formula:

$$0 \leq H_p = -\sum_{j=1}^{K} \frac{p_j \ln p_j}{\ln(m!)} \leq 1. \tag{5}$$

According to the definition, H_p clearly reflects the randomness of time series on the m dimension. In the above process, the embedding dimension m is a very important parameter; Bandt and Pompe suggest m should be valued between 3 and 7 in [10].

Radio transmitter is a complicated system, and it contains different nonlinear characteristics from each analog module. So we cannot reconstruct a complete system phase space using only one dimension. An improved permutation entropy algorithm, which considers multiple dimensions, is proposed in the paper. The improved permutation entropy is called multidimension permutation entropy, and its definition is as follows. The multidimension vector m is defined as

$$m = [m_1 \ \ m_2 \ \ \cdots \ \ m_i \ \ \cdots \ \ m_n]. \tag{6}$$

m_i is the ith dimension embedded in the signal. The permutation entropy under the ith dimension is

$$H_{pi} = \frac{H_p(m_i, l)}{\ln(m_j!)}. \quad (7)$$

Finally, the multidimension permutation entropy can be calculated by the formula:

$$H = [H_{p1} \ H_{p2} \ \cdots \ H_{pi} \ \cdots \ H_{pn}]. \quad (8)$$

The multidimension permutation entropy is a high dimension feature vector to characterize a sample of signal, and it can reflect complexity of system under n dimensions. The new method reconstructs phase space of signal under different dimensions, so it contains rich nonlinear significance of transmitter and approximates to the real system space of device.

2.3. Feature Extraction. Based on the above analysis, we extract the envelope of the radio communication signal and then calculate multidimension permutation entropy of the envelope time series as a radio frequency fingerprint. The fingerprint feature can be calculated by following these steps:

(i) Capture the time slot from the radio communication signal as the signal sample $\{x(i)\}$ $(i = 1, 2, \ldots, N)$ for the feature extraction, where N is the signal length.

(ii) Calculate the envelope sequence $\{\xi(i)\}$ $(i = 1, 2, \ldots, N)$ from the signal sample $\{x(i)\}$.

(iii) Reconstruct phase space of signal envelope sequence $\{\xi(i)\}$ under n dimensions according to (1).

(iv) Range sequence X_i in an ascending order for different dimensions.

(v) Calculate multidimension permutation entropy of the signal sample according to (5).

3. Experimental Results

3.1. Signal Acquisition. To evaluate the performance of the proposed method, an experimental system shown in Figure 2 is implemented. The test equipment comprises PCs, Anykey AKDS700 radios, a digital receiver, and an oscilloscope. Two digital radios are, respectively, a transmitter and a receiver, and the distance between them is ten meters due to laboratory space limitation. There is no obstacle between the transmitter and the receiver, and signals propagate in HF line-of-sight (LOS) channel. Then, real time wireless communication is performed between the transmitting side and the receiving side. The bandwidth of the channel is fixed at 5 M, and the bandwidth of receiver is 20 M. Following this, a digital oscilloscope connected with the digital receiver is utilized to collect the radio's RF signals which are DSSS modulation signals, and its capturing bandwidth is fixed at 10 M. We collect communication signals from the same three model digital radios named R1, R2, and R3.

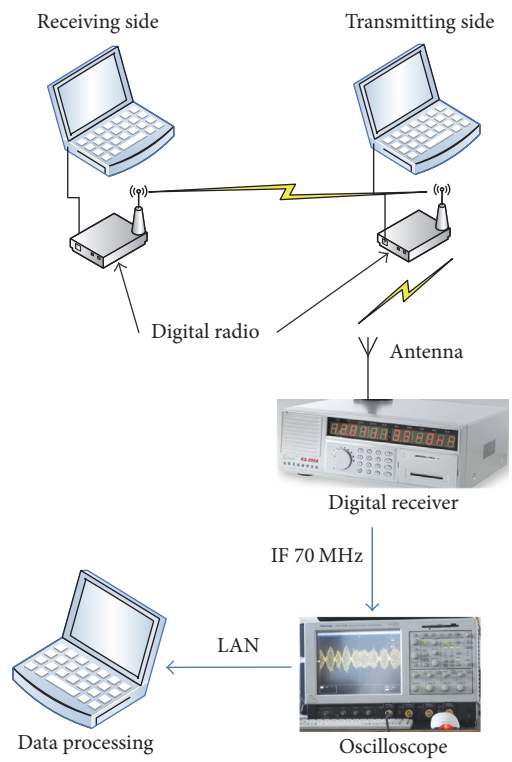

Figure 2: The scheme of experiment.

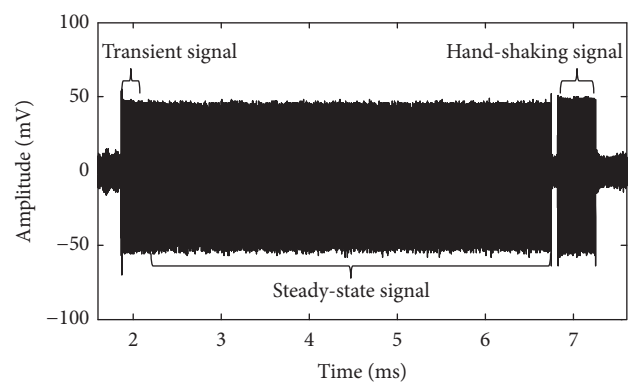

Figure 3: The time domain waveform of radio signal.

3.2. Feature Extraction and Classification Result. In the experiment, one hundred sets of data are collected for each radio. The time domain waveform of radio's DSSS signal is shown in Figure 3, and a complete waveform period comprises transient portion, steady-state portion, and hand-shaking portion. The transient portion which indicates power turns on is very short and difficult to be detected precisely. However, the steady-state and hand-shaking portions come out under stable communication state and are easy to be found out. The steady-state portion includes the random communication data payload, and the hand-shaking portion includes the fixed protocol data payload. To make the performance comparison between fixed and random payload, both the steady-state portion and hand-shaking portion of signal are used for extracting RF fingerprint. We use the

Table 1: Classification confusion matrix for random payload data: steady-state signal of radios (%).

True class	Classified		
	R1	R2	R3
R1	94.7000	4.7251	1.6168
R2	2.1518	90.9079	2.8132
R3	3.1482	4.3670	95.5700

Table 2: Classification confusion matrix for fixed payload data: hand-shaking signal of radios (%).

True class	Classified		
	R1	R2	R3
R1	95.1300	3.9310	1.5484
R2	2.3702	91.0810	3.0253
R3	2.4998	4.9880	95.4263

average power of signal and noise within the same capturing bandwidth 10 M to calculate S/N on the postcollection phase, and their average SNR is 20 dB.

Multidimension permutation entropy of each signal sample is calculated as RF fingerprint. The multidimension vector $m = [3\ \ 4\ \ 5\ \ 6\ \ 7]$ is used in the experiment according to permutation entropy theory, so each radio transmitter has a feature set composed of 100 vectors whose dimension is 5. Then we use a support vector machine (SVM) classifier with RBF kernel [12, 13] to classify these feature vectors. 1000 classification experiments are conducted with feature vectors of each radio transmitter divided equally into two groups for training and testing, and each group constitutes fifty percent of the total. The final average percentages of classification results for steady-state and hand-shaking signals are given by Tables 1 and 2 separately.

As we can see from Tables 1 and 2, when analyzing steady-state signals or hand-shaking signals, correct recognition rates are all above 90% for the three Anykey AKDS700 radios. And according to 500 testing inputs for SVM classifier, we use preconfigured functions to return class confidences for the three classes. Then we take the maximum class confidence 98.7% as the generalized confidence of classification results eventually. The classification results demonstrate that the proposed method for extracting RF fingerprint is an effective and stable technique to identify the individual radio transmitter at a minimum amount of 3 and it is little affected by fixed or random payload data.

4. Performance Comparison

4.1. Comparison with Other Methods. A series of experiments are conducted to evaluate the performance of the proposed method. Two other different steady-state based techniques are used in the experiments. And the classification experiments of two techniques are implemented under the same conditions with the proposed method. As in [4], we extract the envelop of an individual signal and then compute the box dimension and information dimension as individual fractal dimension features. And the average classification accuracy achieves 76.43%, which is almost as many as [4]. Its implementation process is as follows:

(i) Calculate the envelope sequence of the signal sample $\{x(i)\}$.

(ii) Put the signal envelope sequence in the unit square box and then calculate box dimension according to its definition.

(iii) Reconstruct the signal envelope sequence.

(iv) Use the reconstructed signal sequence to calculate the information dimension according to its definition.

Table 3: Comparing classification accuracies.

Method	Average classification accuracy (%)
Multidimension permutation entropy	93.73
Fractal dimension	76.43
Dual-tree complex wavelet transform	84.56

However, unlike the dual-tree complex wavelet transform which is implemented in [6], we extract features from steady-state communicational portions of DSSS signals rather than the preamble response of OFDM-based 802.11a signals. Then we calculate fingerprint features on the wavelet domain based on DT-CWT. Its implementation process is as follows:

(i) For each signal sample $\{x(i)\}$, get real-valued wavelet domain coefficients from two real-valued filter banks for dual-tree complex wavelet transform.

(ii) Use real-valued wavelet domain coefficients to form the sequence of complex sampled WD signal.

(iii) Calculate the variance, skewness, and kurtosis of these WD signal sequences.

(iv) Use the statistics vector including variance, skewness, and kurtosis to generate DT-CWT fingerprints.

Eventually, the average classification accuracy reaches 84.56% by training SVM classifier. The compared average classification accuracies for the three methods are given in Table 3. The experiment results show that average classification accuracy of the proposed method is higher than that of methods based on fractal dimension and dual-tree complex wavelet transform for three radio transmitters under our experiment scene.

4.2. The Effect of Noise. In order to test the performance of the proposed method in different SNR, the Gaussian white noise simulated by MATLAB is added directly to the steady-state signals for comparison. Figure 4 shows the average classification accuracies for the three radio transmitters under different simulation SNR. As can be seen from Figure 4, the classification accuracy begins to degrade obviously when

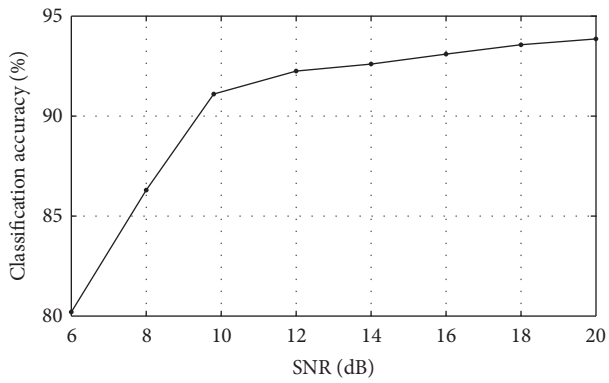

Figure 4: Classification accuracies for different SNR.

SNR is below 10 dB and the classification accuracy of the proposed method is greater than 90% when SNR is above 10 dB. Because RF fingerprints of steady-state signals are minor components hidden in signals, they will be overwhelmed more seriously if the noise is greater. And when SNR is above 10 dB, noise is too weak to overwhelm fingerprints. As a result, the proposed method based on multidimension permutation entropy has a good performance, especially when SNR is above 10 dB.

4.3. Computational Complexity Analysis. From the process of extracting RF fingerprint characteristics, computation of the algorithm is mainly concentrated on the calculation of the multidimension permutation entropy, and other calculation on data preprocessing is negligible. From (1), we can know that phase space reconstruction needs $N - (m - 1)l$ addition operations, so the computational complexity for (1) is $O(N - (m - 1)l)$. And according to (2), the sort operation needs a complexity of $O(N * m \log m)$. Then according to (4) and (8), the complexity for calculating the value of multidimension permutation entropy is $O(nk)$. So the total computational complexity for the method is about $O(N - (m - 1)l) + O(N * m \log m) + O(nk)$. From the complexity analysis, we can know that when data length N is fixed, computational complexity for the method is mainly effected by embedding dimension m and dimension's number n. Obviously, the larger m and n are, the higher the computational complexity will be. Large dimension parameters can make RF fingerprint characteristics contain more abundant information representing individual. Therefore, in practice, the m and n values should be compromised between calculation and classification ability.

5. Conclusions

In this paper, we propose a new RF fingerprint method based on multidimension permutation entropy. The proposed method is based on the principle that the inherent nonlinear components within transmitters are unintentional, inevitably, and individual can designate the unique transmitter. Multidimension permutation entropy contains rich nonlinear characteristics of transmitter and can be used to extract RF fingerprint of transmitter. Then, classification experiments for three radios are conducted by a signal acquisition system. The experimental result demonstrates that the proposed method is effective for both fixed and random payload at a minimum of 3 transmitters, and the comparison experiment results show that the method works better than the fractal dimension and dual-tree complex wavelet transform techniques under our experiment scene. Also, the proposed method can achieve a good performance when SNR is above 10 dB. The method provides a new convenient and effective solution for radio frequency communication protection and other security fields.

Conflicts of Interest

The authors declare that they have no conflicts of interest.

Acknowledgments

This work is supported by the National Natural Science Foundation of China (Grant no. 61401490).

References

[1] O. Ureten and N. Serinken, "Wireless security through RF fingerprinting," *Canadian Journal of Electrical and Computer Engineering*, vol. 32, no. 1, pp. 27–33, 2007.

[2] V. Lakafosis, A. Traille, H. Lee et al., "RF fingerprinting physical objects for anticounterfeiting applications," *IEEE Transactions on Microwave Theory and Techniques*, vol. 59, no. 2, pp. 504–514, 2011.

[3] W. C. Suski II, M. A. Temple, M. J. Mendenhall, and R. F. Mills, "Radio frequency fingerprinting commercial communication devices to enhance electronic security," *International Journal of Electronic Security and Digital Forensics*, vol. 1, no. 3, pp. 301–322, 2008.

[4] S. Xu, L. Xu, Z. Xu, and B. Huang, "Individual radio transmitter identification based on spurious modulation characteristic of signal envelop," in *Proceedings of the IEEE Military Communications Conference, MILCOM '08*, USA, 2008.

[5] J. Zhang, F. Wang, O. A. Dobre, and Z. Zhong, "Specific emitter identification via hilbert-huang transform in single-hop and relaying scenarios," *IEEE Transactions on Information Forensics and Security*, vol. 11, no. 6, pp. 1192–1205, 2016.

[6] R. W. Klein, M. A. Temple, and M. J. Mendenhall, "Application of wavelet-based RF fingerprinting to enhance wireless network security," *Journal of Communications and Networks*, vol. 11, no. 6, pp. 544–555, 2009.

[7] S. C. Pires, P. M. Cabral, and J. C. Pedro, "Radio frequency carrier amplitude-burst transmitters - from architecture to circuit," *IET Microwaves, Antennas and Propagation*, vol. 9, no. 3, pp. 271–280, 2015.

[8] H. W. Kang, Y. S. Cho, D. H. Youn et al., "On compensating nonlinear distortions of an OFDM system using an efficient adaptive predistorter," *IEEE Transactions on Communications*, vol. 47, no. 4, pp. 522–526, 1999.

[9] T. J. Bihl, K. W. Bauer, and M. A. Temple, "Feature selection for RF fingerprinting with multiple discriminant analysis and using ZigBee device emissions," *IEEE Transactions on Information Forensics and Security*, vol. 11, no. 8, pp. 1862–1874, 2016.

[10] C. Bandt and B. Pompe, "Permutation entropy: a natural complexity measure for time series," *Physical Review Letters*, vol. 88, Article ID 174102, 2002.

[11] K. El-Darymli, E. W. Gill, C. Moloney, P. McGuire, and D. Power, "Permutation entropy for signal analysis: A case study of synthetic aperture radar imagery," in *Proceedings of the 14th IEEE Canadian Workshop on Information Theory, CWIT 2015*, pp. 66–70, can, July 2015.

[12] M. Hearst, S. Dumais, E. Osman, J. Platt, and B. Scholkopf, "Support vector machines," *IEEE Intelligent Systems and their Applications*, vol. 13, no. 4, pp. 18–28, 1998.

[13] D. Gao and T. Zhang, "Support vector machine classifiers using RBF kernels with clustering-based centers and widths," in *Proceedings of the 2007 International Joint Conference on Neural Networks, IJCNN 2007*, pp. 2971–2976, usa, August 2007.