Hindawi
International Journal of Antennas and Propagation
Volume 2018, Article ID 3453495, 7 pages
https://doi.org/10.1155/2018/3453495

Research Article

Matrix Generation by First-Order Taylor Expansion in a Localized Manner

Jun Hu, Wen Zhang, Tong-Tong Qiu, and Xue Lan

Ministerial Key Laboratory of JGMT, Nanjing University of Science and Technology, Nanjing, China

Correspondence should be addressed to Jun Hu; junhu@njust.edu.cn

Received 6 July 2018; Revised 8 October 2018; Accepted 31 October 2018; Published 27 December 2018

Academic Editor: Renato Cicchetti

The method of moments is widely used, but its matrix generation is time-consuming. In the present paper, a localized multifrequency matrix-filling method is proposed. The method is based on the retarded first-order Taylor expansion of Green's functions on each field point, which can reduce the number of callback Green's functions and hence can solve double-surface integrals quickly. It is also based on the extraction of the common factors of different frequencies, and hence can sweep the frequency points quickly. Numerical examples are provided to validate the efficiencies of the proposed method.

1. Introduction

The method of moments (MoM) has been widely used, and its solutions for most problems are still time-consuming. The matrix of MoM may come from electric-field integral equation (EFIE), magnetic-field integral equation, combined field integral equation [1–3], or current and charge integral equation [4] discretized by pulse basis functions, rooftop basis functions, RWG basis functions [5], pyramid-shaped functions [6], or other higher-order basis functions [7]. Among the above, solving the discretized EFIE with RWG functions is preferred. In most cases, the matrix-filling (both for single-frequency and wide-band problems) in the EFIE with RWG functions is time-consuming [8].

Many research activities have been finalized to accelerate the filling of MoM matrices. In particular, to save time in single-frequency problems, some researchers have provided exact closed-form expressions useful to analyze thin cylindrical structures [9], while others have accelerated the RWG-RWG cycle in primary MoM code using parallel technologies [7, 10, 11]. Some replaced the RWG-RWG loop by the optimized triangle-triangle loop [7, 12]. In order to save matrix-filling time for a wideband sweeping, some researchers developed matrix interpolation methods [8, 13] including Lagrange's interpolation method, Chebyshev interpolation method, rational polynomial approximation, and Hermite interpolation method. Some developed result interpolation/extrapolation methods, like the MBPE [14], the AWE [15], and the ANN [16] methods.

Although these methods are very efficient, the matrix-filling problems are still serious. In both matrix interpolation and result interpolation/extrapolation methods, matrices of sampling frequencies should be filled independently. Meanwhile, in single-frequency problems, double-surface integrals are usually solved by many callback Green's functions. It would be amazing if a method can alleviate double-surface integrals and also generate multimatrices of different frequencies quickly. Recently, several amazing methods based on the higher-order retarded Taylor expansion are developed, where one real matrix depending on geometry parameters is introduced [17–19]. They are applied into partial equivalent element method as in [20–24]. In these works, the Taylor expansions are usually global and of higher order [17].

In this paper, we will propose an amazing method where the 1-ordered Taylor expansion approximates Green's functions locally. Like methods already published, it reduces the number of callback Green's functions because of the

ultra-wideband approximation. It also extracts the common factors in double-surface integrals of different frequencies and improves the matrix generation of multifrequency.

2. Principle of the Proposed Method

The proposed method can be integrated into numerical solvers involving surface integral equations. In order to explain the principle clearly, the following description refers to the EFIE-based Galerkin's method.

The discretized EFIE is usually written as

$$-\frac{\mathrm{j}}{\omega\mu}\mathbf{E}_{\mathrm{i}}(r)=\int_S\left(\underline{\mathbf{I}}+\frac{\nabla\nabla}{k^2}\right)\cdot\sum_{n=1}^{N}\frac{e^{-\mathrm{j}kR}}{4\pi R}I_n\mathbf{f}_n\mathrm{d}s', \tag{1}$$

where S denotes the support of surface current, $R=|\mathbf{r}-\mathbf{r}'|$ is the distance between source point $\mathbf{r}'$ and field point $\mathbf{r}$, $\mathbf{f}_n$ is the nth basis function, N is the number of basis functions, I_n is the coefficient, $\mathbf{E}_{\mathrm{i}}$ is the incident electrical field, k is the wave number, ω is the angular frequency, and μ is the magnetic permeability. After being tested and transformed, the discretized EFIE is rewritten as follows:

$$\underline{\mathbf{Z}}\mathbf{I}=\mathbf{V}, \tag{2}$$

where $\mathbf{I}$ denotes the vector consisting of unknown I_n, $\mathbf{V}$ is the vector consisting of tested incident electrical field $\mathbf{E}_{\mathrm{i}}$, and $\underline{\mathbf{Z}}$ is the impedance matrix.

In order to avoid singularities $1/R^2$ and $1/R^3$ in Eq. (1), the above matrix $\underline{\mathbf{Z}}$ is filled by the following transformed double-surface integral:

$$Z_{mn}=\int_S\int_S\left[\mathbf{g}_m\cdot\mathbf{f}_n-\frac{1}{k^2}\nabla\cdot\mathbf{g}_m\nabla\cdot\mathbf{f}_n\right]\frac{e^{-\mathrm{j}kR}}{R}\mathrm{d}s'\mathrm{d}s, \tag{3}$$

element by element, where $\mathbf{g}_m$ denotes the mth testing function. In Eq. (3), testing functions and basis functions are in the same completed function system. The preferred system of functions employed to describe the unknowns on arbitrary surfaces is that of based on linear functions, including the RWG and the rooftop basis functions. The traditional matrix filling and its repeated operations are very time-consuming. An improvement based on retarded Taylor expansion is as follows:

$$\begin{aligned}Z_{mn}=e^{-\mathrm{j}kR_{t,b}}\sum_{l=0}^{N_{\max}}\int_S\int_S\left[\mathbf{g}_m\cdot\mathbf{f}_n-\frac{1}{k^2}\nabla\cdot\mathbf{g}_m\nabla\cdot\mathbf{f}_n\right]\\ \cdot\frac{(-\mathrm{j}k)^l(R-R_{\mathrm{t,b}})^l}{l!R}\mathrm{d}s'\mathrm{d}s,\end{aligned} \tag{4}$$

where $R_{\mathrm{t,b}}$ denotes the distance between the testing function and the basis function [17] and $N_{\max}$ is the maximum order of expansion terms. In the above, the retarded Taylor expansion method is globally used for every element, and we call it as the global method. In the present paper, a different method based on first-order Taylor expansion is proposed, which is called as the localized method.

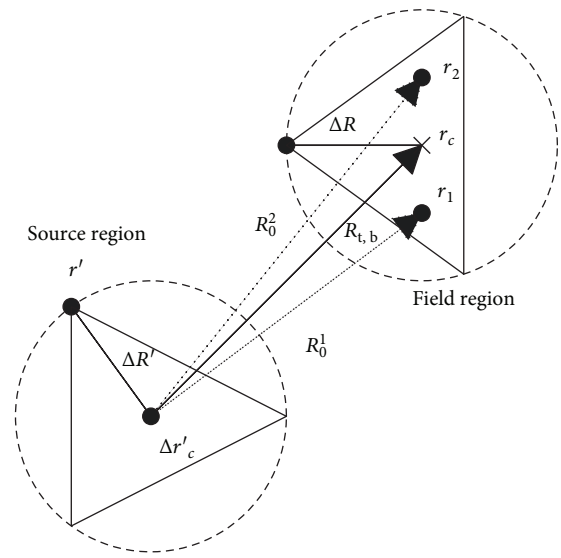

Figure 1: The sketch of the distances for the retarded Taylor expansion.

The localized method focuses on the following two important primary integrals, $\mathbf{I}_{\mathrm{v}}$ and I_{s}, on the source regions for every field

$$\mathbf{I}_{\mathrm{v}}=\int_S\frac{e^{-\mathrm{j}kR}\mathbf{f}_n}{R}\mathrm{d}s', \tag{5}$$

$$I_{\mathrm{s}}=\int_S\frac{e^{-\mathrm{j}kR}\nabla\cdot\mathbf{f}_n}{R}\mathrm{d}s'. \tag{6}$$

Although the above two integrals can be solved by exact closed-form expression [9] for thin cylindrical structures, fast methods with primary functions for surface structures are necessary. After the first-order Taylor expansion, Eqs. (5) and (6) are approximated by concise expressions.

$$\mathbf{I}_{\mathrm{v}}\approx e^{-\mathrm{j}kR_0}\left[(1+\mathrm{j}kR_0)\int_S\frac{\mathbf{f}_n}{R}\mathrm{d}s'-\mathrm{j}k\int_S\mathbf{f}_n\mathrm{d}s'\right], \tag{7}$$

$$I_{\mathrm{s}}\approx e^{-\mathrm{j}kR_0}\left[(1+\mathrm{j}kR_0)\int_S\frac{\nabla\cdot\mathbf{f}_n}{R}\mathrm{d}s'-\mathrm{j}k\int_S\nabla\cdot\mathbf{f}_n\mathrm{d}s'\right], \tag{8}$$

where R_0 denotes the distance between the field point and the center of source region. Their relative errors are the following:

$$\epsilon_{\mathbf{I}_{\mathrm{v}}}\le 0.5k^2\Delta R'^2, \tag{9}$$

$$\epsilon_{I_{\mathrm{s}}}\le 0.5k^2\Delta R'^2, \tag{10}$$

respectively, where $\Delta R'$ is the diameter of the source region as shown in Figure 1. In Figure 1, points $\mathbf{r}'$ and $\mathbf{r}'_{\mathrm{c}}$ denote the source points in the source region and points $\mathbf{r}_1$, $\mathbf{r}_2$, and $\mathbf{r}_{\mathrm{c}}$ denote the field points in the field region,

Table 1: The complexity comparison (p-point Gaussian quadrature).

Operations	Traditional method	Proposed method	Difference Items	Difference Total
Multiplication	p	5	p-5	
Division	p	p	0	
Exponential	p	1	p-1	15.8p -21.6
Addition	0	1	-1	
Subtraction	0	1	-1	

respectively. The accuracy ($\epsilon < 0.01$) of the above approximation can be assured if the condition $k|R - R_0| < 0.1$ holds. This condition is usually compatible with the meshing requirement for linear basis functions. Compared with the global method in [17], the approximation based on Taylor expansion is localized for each field point in test function. The localized operation makes it easier to achieve the required accuracy. In the global method, the accuracy is assured by high order or by both ΔR and $\Delta R'$; in the localized method, the accuracy is assured by $\Delta R'$.

From the above approximations, one can find that the complexity of the proposed method is much smaller than the traditional Galerkin's methods. This improvement contributes to fewer exponential terms than the traditional methods. In order to explain it clearly, we make a comparison, reported in Table 1, where the p-point quadrature is used to compute surface integrals. From Table 1, one can find that the numbers of different operations change significantly, especially for the multiplication operations and the exponential operations. Since the exponential terms in Eqs. (5) and (6) have been extracted from the surface integral, the number of multiplication operations is independent to the p-point quadrature for surface integrals and is only dependent on the operations out of the surface integrals. When different operations are converted as in Table 2, the theoretical complexity is about $15.8p - 21.6$, where p equals to the number of multiplication operations. In Table 2, the first row indicates the CPU time of different operations and the second row indicates the converting ratios of different operations to multiplication operations. Combining the converting ratios with the numbers of different operations, one can obtain the above complexity easily.

By the above approximations, we can build the fast wideband matrix generating method. Let

$$\begin{aligned} \mathbf{A}_n &= \int_S \frac{\mathbf{f}_n}{R} \mathrm{d}s', \\ \mathbf{B}_n &= \int_S \mathbf{f}_n \mathrm{d}s', \\ C_n &= \int_S \frac{\nabla \cdot \mathbf{f}_n}{R} \mathrm{d}s', \\ D_n &= \int_S \nabla \cdot \mathbf{f}_n \mathrm{d}s'. \end{aligned} \tag{11}$$

They are independent to frequency. These integrals can be solved analytically [20] or numerically solved like by the triangle rendering method using adaptive subdivision [25]. Combined with terms dependent on frequency, we have

$$\mathbf{I}_\mathrm{v} \approx e^{-\mathrm{j}kR_0}[(1 + \mathrm{j}kR_0)\mathbf{A}_n - \mathrm{j}k\mathbf{B}_n], \tag{12}$$

$$I_\mathrm{s} \approx e^{-\mathrm{j}kR_0}[(1 + \mathrm{j}kR_0)C_n - \mathrm{j}kD_n]. \tag{13}$$

Compared with the traditional linear sweeping method, one can find that the matrices of different frequencies share the same frequency-less terms and avoid many redundant numerical integrals. Because of the above sharing, the frequency sweeping can be greatly accelerated. Finally, we have the matrix element

$$Z_{mn} = \int_S \mathbf{I}_\mathrm{v} \cdot \mathbf{g}_m - \frac{1}{k^2} I_\mathrm{s} \nabla \cdot \mathbf{g}_m \mathrm{d}s. \tag{14}$$

3. Numerical Examples and Performance Analysis

In order to validate the accuracy and the efficiency of the proposed method, three typical strip antennas are analyzed by the traditional Galerkin's method of moments and the proposed method. Both the traditional Galerkin's method of moments and the proposed method are based on rooftop basis functions. In addition, the matrix-filling method based on double-surface integrals is studied here because of its flexibilities and extensibilities, which is similar to the realization in [25]. Other specified methods, like reduced kernel methods and closed-form methods, are more powerful for thin line structures. However, the proposed method works well for arbitrary planar line structures, and it can be extended to arbitrary surface structures. The realizations are coded in Python 2.7 (Windows version) with NumPy 1.13.3. These examples are validated on a laptop whose CPU frequency is 2.3 GHz. Moreover, double-surface integrals are numerically solved by the adaptive subdivision method with a 9-point Gaussian quadrature for inner integrals and a 1-point Gaussian quadrature for outer integrals. Meanwhile, all antennas have delta-gap voltage sources at their centers.

The first antenna is a strip dipole antenna with 0.5 m length and 0.001 m width, whose frequency ranges from 200 MHz to 400 MHz. It is divided into 100 pieces, according to the highest frequency. The accuracy of the proposed method can be appreciated by the curves shown in Figures 2–4. In Figure 2, the radiation pattern at 300 MHz is provided, which agrees with the result in [25]. In Figures 3 and 4, the S-parameters of the two methods and their comparison are provided, respectively, which suggests that the proposed method has great accuracy. The efficiency of the proposed method is validated by Table 3. Table 3 shows that the CPU time of the single-frequency sweeping is greatly reduced by about 45%. It also shows that the CPU time of the multifrequency sweeping is further reduced by about 50%. It is worth pointing out that the practical speedup

Table 2: The CPU time of different operations (repeated by 100 M times).

	Addition	Subtraction	Multiplication	Division	Exponential
Time (s)	0.63	0.71	0.73	0.81	10.8
Ratio	0.86	0.97	1.	1.10	14.8

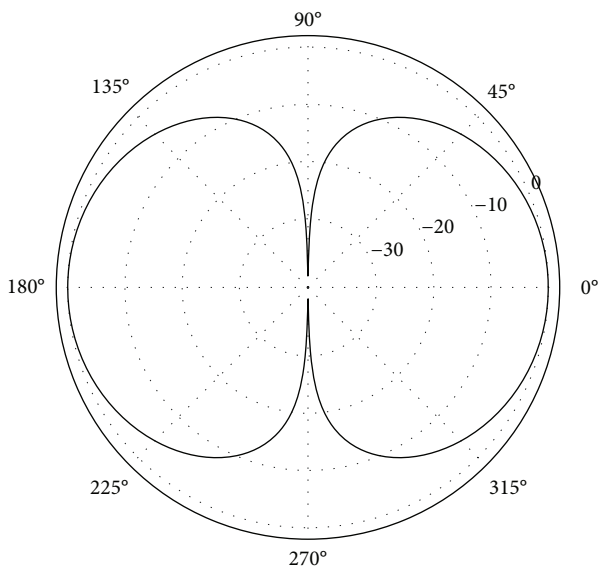

Figure 2: Radiation pattern on E-plane (300 MHz).

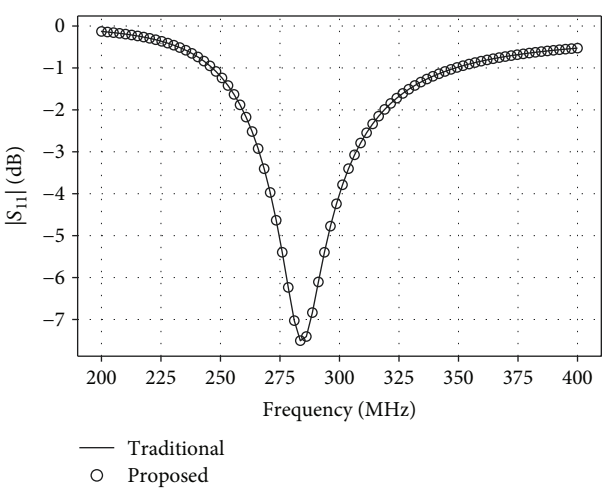

Figure 3: S-parameter of the dipole.

in Table 3 does not increase significantly with the number of frequency samples. It is because the practical speedup comes only from the sharing of frequency-less terms. Sharing technologies cannot reduce other exponential terms dependent on frequency. So higher practical speedup can be obtained by combining the proposed method with other interpolation/extrapolation methods for exponential terms. Interpolation/extrapolation methods for exponential terms can bring about a significant increase with the number of frequency samples.

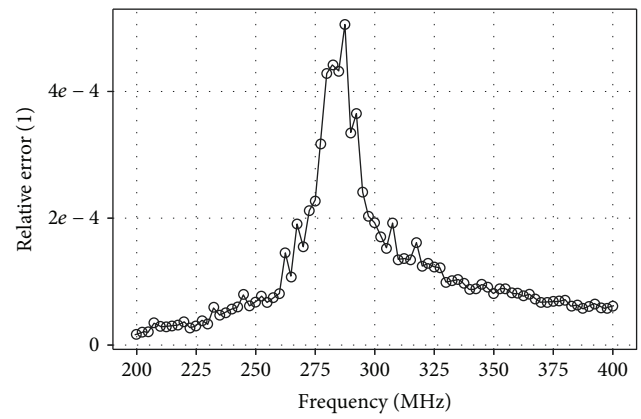

Figure 4: The relative error of the S-parameters between the results of the proposed method and the traditional method.

The second antenna is a strip circle loop antenna with a 1 m radius and 0.04 m width, whose frequency ranges from 3.0 MHz to 6.0 MHz. It is divided into 100 pieces. The accuracy of the proposed method is validated as shown in Figures 5 and 6. In Figure 5, the radiation pattern at 4.8 MHz is provided, which agrees with the result in [25]. In Figure 6, the comparison of S-parameters from the two methods are provided, which also suggests that the proposed method has great accuracy. The efficiency of the proposed method is validated by Table 4. Table 4 shows that the matrix-filling CPU time of the single-frequency sweeping is greatly reduced by about 27% and the time of the multifrequency sweeping is further reduced by about 50%.

The third antenna is an Archimedes strip spiral antenna with a 1 m length and 10 turns as shown in Figure 7, whose frequency ranges from 300 MHz to 600 MHz. It is divided into 500 pieces. The accuracy of the proposed method is validated by Figures 8–10. In Figure 8, the radiation pattern at 300 MHz is provided, which agrees with the result in [25]. In Figures 9 and 10, the S-parameters and their comparison are provided, which also suggests that the proposed method has great accuracy. The efficiency of the proposed method is validated by Table 5. Table 5 shows that the CPU time of the single-frequency sweeping is greatly reduced by about 56% and the time of the multifrequency sweeping is further reduced by about 71%. All of these suggest that the efficiency of matrix generation has been greatly improved. For the sake of completeness, the current behaviors at the frequency of 300 MHz are shown in Figures 11–13. In Figure 11, both the real and imaginary parts of the current are shown. In Figure 12, the amplitude level of the current is shown using different colors, where blue denotes small values, while high values are depicted in red. In Figure 13, the phase of the

Table 3: CPU time of the traditional method and the proposed method.

	Traditional method (s)	Proposed method (s)	Saved time (%)	Speedup
Single point (300 MHz)	0.080	0.044	45.0	1.81
100 points	5.58	2.42	56.6	2.31
300 points	16.10	6.91	57.1	2.33
500 points	26.46	11.9	55.2	2.23

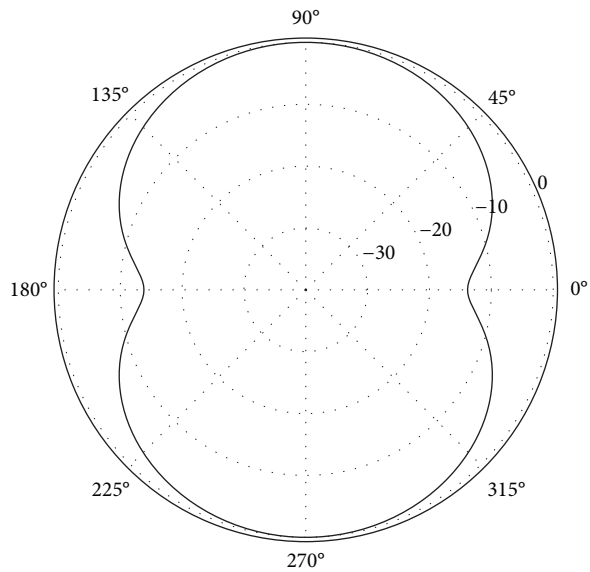

Figure 5: Radiation pattern on E-plane (4.8 MHz).

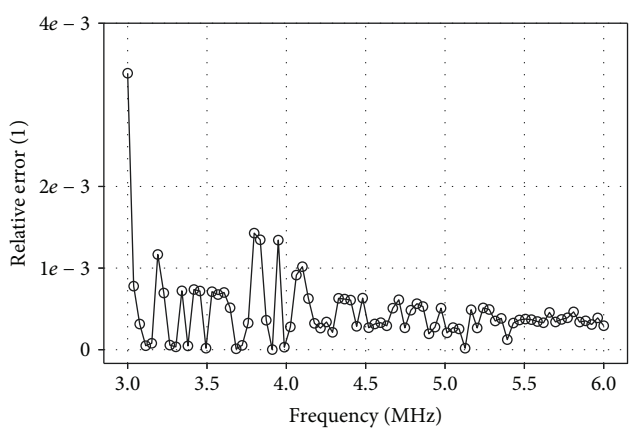

Figure 6: The relative error of the S-parameters between the results of the proposed method and the traditional method.

Table 4: CPU time of the traditional method and the proposed method.

	Traditional method (s)	Proposed method (s)	Saved time (%)	Speedup
Single point (4.8 MHz)	0.079	0.057	27.9	1.39
100 points	5.15	2.42	53.0	2.13
300 points	14.7	7.32	50.4	2.01
400 points	20.0	9.52	52.4	2.10

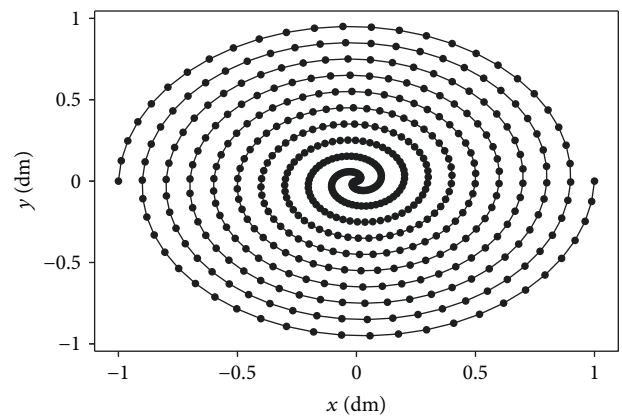

Figure 7: The mesh of an Archimedes spiral antenna.

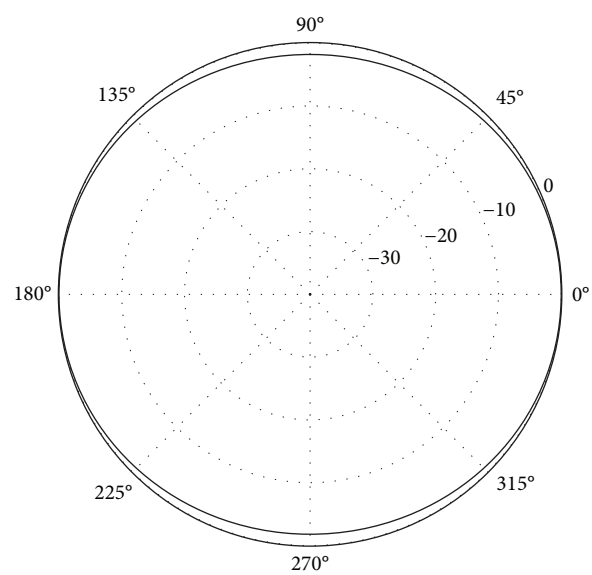

Figure 8: Radiation pattern on E-plane (300 MHz).

current is also shown, where the blue refers to negative and the red to positive values.

According to the above examples and performance analysis, it is found out that CPU time can be greatly saved for both single-frequency and multifrequency sweeping problems. Compared with the former, the proposed method is especially suitable for the latter. Its performance suggests that this method can be combined with other wideband methods, like interpolation/extrapolation methods, for further improvement.

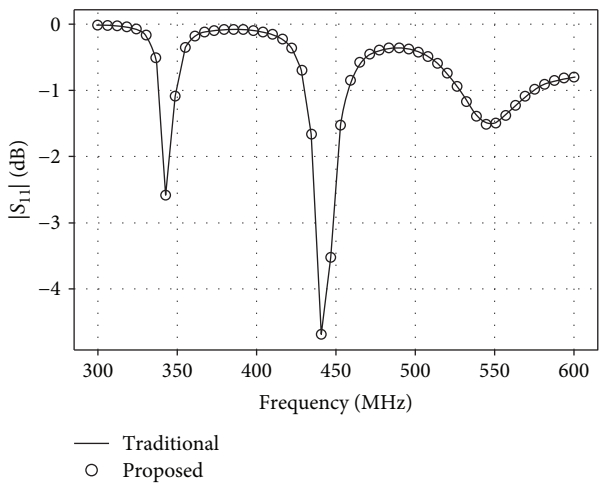

Figure 9: S-parameter of the Archimedes spiral antenna.

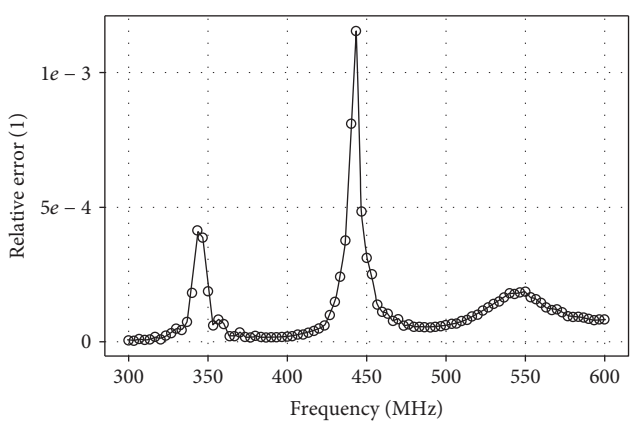

Figure 10: The relative error of the S-parameters between the results of the proposed method and the traditional method.

Table 5: CPU time of the traditional method and the proposed method.

	Traditional method (s)	Proposed method (s)	Saved time (%)	Speedup
Single point (300 MHz)	1.11	0.48	56.6	2.31
100 points	83.3	24.1	71.0	3.45
300 points	245	65.5	73.3	3.74
500 points	416	107	74.2	3.87

4. Conclusion

A matrix-generating method based on first-order retarded Taylor expansion in a localized manner for multifrequency sweeping has been proposed. The method can significantly reduce the numerical burden of the surface quadrature and can generate matrices for multifrequencies quickly. The proposed method can be combined with other fast methods for solving single-frequency problems and can also be combined with any type of interpolation/extrapolation methods for solving broadband problems.

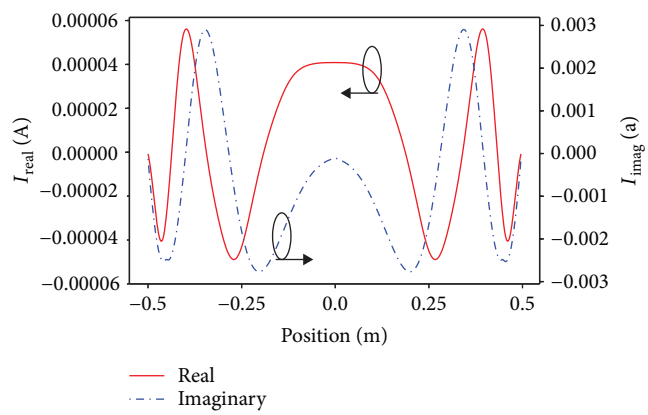

Figure 11: The current distribution along the spiral.

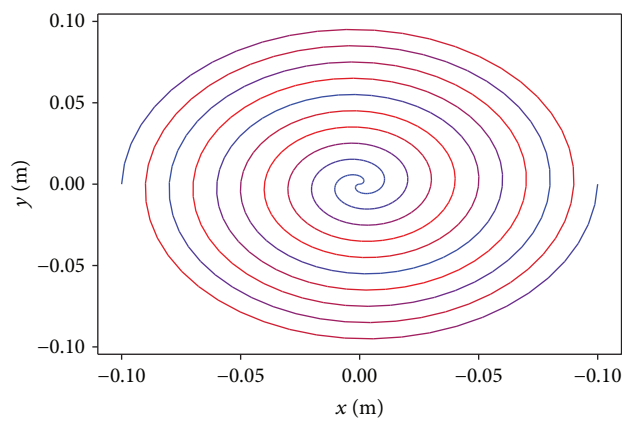

Figure 12: The amplitude distribution of current on the x-y plane.

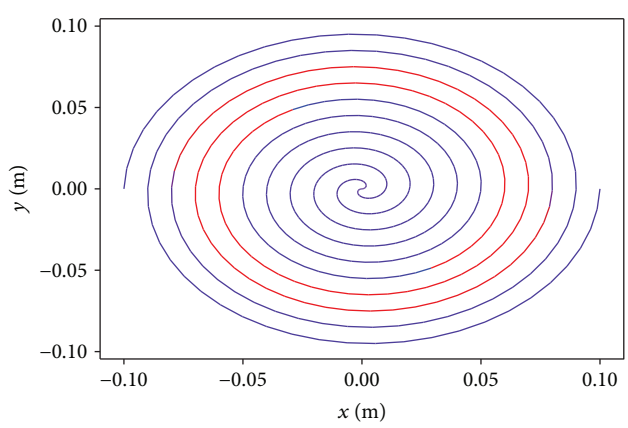

Figure 13: The phase distribution of current on the x-y plane.

Data Availability

The data used to support the findings of this study are included within the article.

Conflicts of Interest

The authors declare that they have no conflicts of interest.

Acknowledgments

This work was supported by the National Natural Science Foundation of China under Grant 61901019.

References

[1] J. A. Kong, *Electromagnetic Wave Theory*, Higher Education Press, Beijing, China, 2002.

[2] O. Ergul and L. Gurel, "Investigation of the inaccuracy of the MFIE discretized with the RWG basis function," in *IEEE Antennas and Propagation Society Symposium, 2004*, pp. 3393–3396, Monterey, CA, USA, June 2004.

[3] P. Yla-Oijala and M. Taskinen, "Calculation of CFIE impedance matrix elements with RWG and n x RWG functions," *IEEE Transactions on Antennas and Propagation*, vol. 51, no. 8, pp. 1837–1846, 2003.

[4] G. Fikioris, I. Tastsoglou, G. D. Kolezas, and T. Hatziafratis, "Unphysical moment-method solutions of an approximate integral equation of electrostatics [open problems in computational EM]," *IEEE Antennas and Propagation Magazine*, vol. 59, no. 3, pp. 142–153, 2017.

[5] S. Rao, D. Wilton, and A. Glisson, "Electromagnetic scattering by surfaces of arbitrary shape," *IEEE Transactions on Antennas and Propagation*, vol. 30, no. 3, pp. 409–418, 1982.

[6] W.-D. Li, Z. Song, J. Hu, and W. Hong, "Improving combined version of current and charge integral equation with pyramid-shaped functions," *IEEE Antennas and Wireless Propagation Letters*, vol. 14, pp. 1630–1633, 2015.

[7] Y. Zhang, Z. Lin, X. Zhao, and T. K. Sarkar, "Performance of a massively parallel higher-order method of moments code using thousands of CPUs and its applications," *IEEE Transactions on Antennas and Propagation*, vol. 62, no. 12, pp. 6317–6324, 2014.

[8] W.-D. Li, H.-X. Zhou, W. Hong, and T. Weiland, "An accurate interpolation scheme with derivative term for generating MoM matrices in frequency sweeps," *IEEE Transactions on Antennas and Propagation*, vol. 57, no. 8, pp. 2376–2385, 2009.

[9] R. Cicchetti and A. Faraone, "Exact closed-form expression of the electromagnetic field excited by pulse-shaped and triangular line currents," *IEEE Transactions on Antennas and Propagation*, vol. 56, no. 6, pp. 1706–1716, 2008.

[10] X. Mu, H.-X. Zhou, K. Chen, and W. Hong, "Higher order method of moments with a parallel out-of-core LU solver on GPU/CPU platform," *IEEE Transactions on Antennas and Propagation*, vol. 62, no. 11, pp. 5634–5646, 2014.

[11] K.-L. Zheng, H.-X. Zhou, and W. Hong, "Integral equation-based nonoverlapping DDM using the explicit boundary condition," *IEEE Transactions on Antennas and Propagation*, vol. 63, no. 6, pp. 2739–2745, 2015.

[12] X.-F. Cui, J.-Y. Peng, H.-X. Zhou, G. Hua, W.-D. Li, and W. Hong, "Fast filling the moment method matrices with local-domain basis functions," in *National Microwave Millimeter Wave Conference*, pp. 1202–1205, Qingdao, China, June 2011.

[13] T.-H. Wen, J. Hu, B.-W. He, and J.-L. Zhang, "A new ultra-wide band characteristic basis function method based on interpolation scheme," in *2016 IEEE International Conference on Ubiquitous Wireless Broadband (ICUWB)*, pp. 1–4, Nanjing, China, October 2016.

[14] D. G. Fang, *Antenna Theory and Microstrip Antennas*, Science Press, Beijing, China, 2006.

[15] A. M. Yao, W. Wu, J. Hu, and D. G. Fang, "Combination of ultra-wide band characteristic basis function method and asymptotic waveform evaluation method in MoM solution," in *2013 Proceedings of the International Symposium on Antennas & Propagation*, pp. 795–798, Nanjing, China, January 2013.

[16] Q. J. Zhang and K. C. Gupta, *Neural Networks for RF and Microwave Design*, Artech House, 2000.

[17] G. Hislop, N. A. Ozdemir, C. Craeye, and D. G. Gonzalez Ovejero, "MoM matrix generation based on frequency and material independent reactions (FMIR-MoM)," *IEEE Transactions on Antennas and Propagation*, vol. 60, no. 12, pp. 5777–5786, 2012.

[18] H. Zhang, Z. Fan, and R. Chen, "Fast wideband scattering analysis based on Taylor expansion and higher-order hierarchical vector basis functions," *IEEE Antennas and Wireless Propagation Letters*, vol. 14, pp. 579–582, 2015.

[19] Q. M. Cai, Y. W. Zhao, Z. P. Zhang, and Z. P. Nie, "Fast analysis of RCS over a frequency and material band using JVIE with Taylor expansion," in *2016 IEEE 5th Asia-Pacific Conference on Antennas and Propagation (APCAP)*, pp. 227-228, Kaohsiung, Taiwan, July 2016.

[20] L. Lombardi, G. Antonini, and A. E. Ruehli, "Analytical evaluation of partial elements using a retarded Taylor series expansion of the Green's function," *IEEE Transactions on Microwave Theory and Techniques*, vol. 66, no. 5, pp. 2116–2127, 2018.

[21] G. Antonini and D. Romano, "An accurate interpolation strategy for fast frequency sweep of partial element equivalent circuit models," *IEEE Transactions on Electromagnetic Compatibility*, vol. 56, no. 3, pp. 653–658, 2014.

[22] G. Antonini, D. Deschrijver, and T. Dhaene, "Broadband macromodels for retarded partial element equivalent circuit (rPEEC) method," *IEEE Transactions on Electromagnetic Compatibility*, vol. 49, no. 1, pp. 35–48, 2007.

[23] L. Lombardi, G. Antonini, and A. E. Ruehli, "Analytical evaluation of partial inductances with retardation," in *2017 IEEE 26th Conference on Electrical Performance of Electronic Packaging and Systems (EPEPS)*, pp. 1–3, San Jose, CA, USA, October 2017.

[24] A. Hu, Z. Zhao, B. Ouyang, and Q. Meng, "Approximate evaluation of the integration of Green's function for parallel interconnects," *IEEE Transactions on Microwave Theory and Techniques*, vol. 62, no. 8, pp. 1579–1589, 2014.

[25] S. N. Makarov, *Antenna and EM Modeling with MATLAB*, John Wiley and Sons, Inc., New York, NY, USA, 2002.