Hindawi
International Journal of Corrosion
Volume 2019, Article ID 9020489, 6 pages
https://doi.org/10.1155/2019/9020489

Research Article

Corrosion Study of Aluminum Alloy 3303 in Water-Ethylene Glycol Mixture: Effect of Inhibitors and Thermal Shocking

Mohammad Asadikiya,[1,2,3] **Yu Zhong**,[1,2] **and Mohammad Ghorbani**[3]

[1]*Department of Mechanical and Materials Engineering, Florida International University, Miami, Florida 33174, USA*
[2]*Center for the Study of Matter at Extreme Conditions (CeSMEC), Florida International University, Miami, Florida 33199, USA*
[3]*Department of Materials Science and Engineering, Sharif University of Technology, Tehran, Iran*

Correspondence should be addressed to Mohammad Asadikiya; masad005@fiu.edu

Received 3 April 2018; Revised 4 December 2018; Accepted 20 December 2018; Published 10 January 2019

Academic Editor: Flavio Deflorian

Three types of corrosion inhibitors consisting of sodium diphosphate ($Na_2H_2P_2O_7$), sodium benzoate ($NaC_7H_5O_2$), and sodium tetraborate ($Na_2B_4O_7$) were evaluated to analyze their effectiveness to inhibit the aluminum alloy 3303 (UNS A93303) against corrosion, in water-ethylene glycol ($C_2H_6O_2$) mixture. Potentiodynamic polarization tests were carried out to study the effect of each chemical. The temperature of solutions was 88°C and the aluminum samples were coupled with five other metals consisting of mild steel, stainless steel, brass, copper, and solder to include the effect of galvanic corrosion. The results showed that sodium diphosphate can effectively protect the aluminum alloy 3303 in comparison with two other chemicals. The effect of thermal shocking on the corrosivity of water-ethylene glycol solution was also investigated. It was indicated that the corrosivity of water-ethylene glycol solution increases because of thermal shocking, which oxidizes the aqueous ethylene glycol. The corrosion rate of aluminum alloy 3303 coupled with the five metals in thermal shocked water-ethylene glycol solution is 142 mpy, while it is 94 mpy in fresh water-ethylene glycol solution.

1. Introduction

One of the main applications of aluminum alloy 3303 (UNS A93303) is in cooling systems of internal combustion engines as radiator, due to its lightness, high thermal conductivity, good corrosion resistance, and other interesting properties [1]. Considerable amount of heat is produced because of the function of combustion engines, which is needed to be removed [2]. Water is an attractive and well known coolant because of its availability and capability of heat transmission, which can pass through the cooling system circuit and remove the generated heat from the engine [2]. In order to prevent water from freezing in cold seasons, commonly an alcohol named ethylene glycol ($C_2H_6O_2$) is used along with water in the cooling systems [2, 3]. The water-ethylene glycol mixture can cause corrosion in different parts of cooling system due to oxidation of aqueous ethylene glycol during the use of coolant [4, 5]. Corrosion is aggravated at the functional temperature of combustion engines, which usually elevates the temperature of the coolant to nearly the boiling point of water [6]. This fact that different types of metals are galvanically coupled together in cooling systems is another source of promoting corrosion in these systems. Among the alloys used in a cooling system, the galvanic coupling is more dangerous for aluminum (Al), which is electrochemically weak in comparison to a lot of other metals [7]. Therefore, it is necessary to utilize a proper protection against corrosion [8–10]. Applying corrosion inhibitors along with the water-ethylene glycol mixture is a common and effective approach to prevent from corrosion of aluminum [11, 12]. A lot of researches have been done so far to nominate appropriate corrosion inhibitors to protect aluminum alloys in different conditions and environments [13–22]. In 2011, the effects of four mineral corrosion inhibitors consisting of sodium nitrite ($NaNO_3$), sodium nitrate ($NaNO_2$), sodium molybdate (Na_2MoO_4), and sodium silicate (Na_2SiO_3) on the corrosion behavior of aluminum in water-ethylene glycol mixture were studied. Results showed that aluminum is

protected in the presence of sodium nitrite and sodium molybdate [23]. Liu and Cheng studied the corrosion of automotive cooling system aluminum alloy in water-ethylene glycol solution in the presence of various ions [24]. They reported that a layer of aluminum-alcohol film is produced on the metal, which can protect the aluminum alloy from corrosion against different ions, depending on the ethylene glycol concentration [24], although their results were regardless of ethylene glycol decomposition due to thermal shocks.

Economical and efficient corrosion inhibitors are widely needed by industrial sections. This need is especially critical for aluminum as extensively applicable alloy. In the current work, the effect of three chemicals consisting of sodium diphosphate ($Na_2H_2P_2O_7$), sodium benzoate ($NaC_7H_5O_2$), and sodium tetraborate ($Na_2B_4O_7$), as the economical and available inhibitors on the corrosion behavior of 3303 aluminum alloy in water-ethylene glycol mixture were investigated. The potentiodynamic polarization method was applied for corrosion measurements. In this research, the studied aluminum samples were coupled with five metals consisting of mild steel, brass, copper, solder, and stainless steel to include the effect of galvanic corrosion. The results of aluminum corrosion studies in the presence of inhibitors were compared to that of without inhibitor as a reference state. Optical microscopy was applied to study the surface of the samples after corrosion tests. In addition, since thermal shocking is one of the routine conditions in the combustion engines and its effect on the corrosivity of coolant cannot be neglected, the effect of thermal shocking on the corrosivity of aqueous ethylene glycol was also studied.

2. Experimental Procedure

The studied metal was aluminum alloy 3303 containing (wt.%) 0.96 manganese, 0.637 iron, 0.43 zinc, 0.239 silicon, 0.064 copper, 0.025 titanium, and 0.024 magnesium. Five other metals consisting of mild steel, brass, copper, solder, and stainless steel, which are regularly used in the structure of cooling systems, were also prepared [23]. Each metal was cut in square shape with the dimensions of $2 \times 2\,cm^2$ and thickness of 0.34 to 0.8 mm. Except one $2 \times 2\,cm^2$ side of each sample, all other sides were coated by lacquer as a polymeric insulator. The solution was the mixture of hard water (based on the ASTM D 1384 standard) and 33 1/3 volume percent ethylene glycol. All the steps of sample pretreatment procedures and preparation of materials were done based on ASTM D 1384 standard [25]. Sodium diphosphate, sodium benzoate, and sodium tetraborate were also prepared to be added in the water-ethylene glycol mixture with the concentration of 1 wt.% as corrosion inhibitors. Therefore, the study was focused on the evaluation of the effect of each inhibitor with equal concentrations. The temperature of solutions in all tests was 88°C and the solutions were being circulated with the speed of 720 rpm during the measurements. The potentiodynamic polarization tests by saturated calomel electrode (SCE) were carried out on the aluminum samples based on ASTM G5 standard [26]. The samples were allowed to reach equilibrium state by immersing for 30 min before starting the test. The scan rate for all tests was 2 mV/s and the scanned potential range was over ±0.4 V versus open circuit potential (OCP). The surface of all tested samples was studied applying optical microscopy characterization method. In order to study the effect of thermal shocking on the corrosivity of aqueous ethylene glycol, the water-ethylene glycol mixture was being heated to 88°C, held at this temperature for an hour, and cooled to the room temperature, every day for 2 weeks. The result of potentiodynamic polarization test of the aluminum sample in this thermal shocked solution was then compared with that of the aluminum sample in a fresh water-ethylene glycol solution. All the potentiodynamic polarization tests were done twice to assure reproducibility.

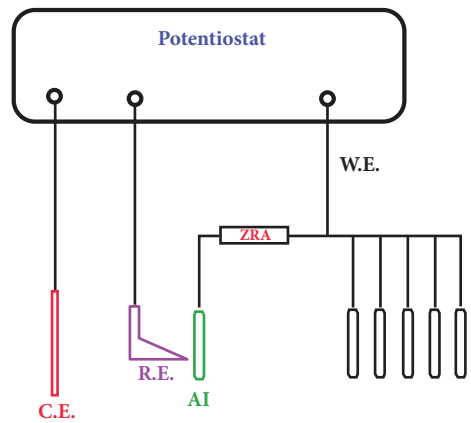

Figure 1: The circuit used for potentiodynamic polarization tests.

3. Results and Discussion

In order to capture the corrosion current from only aluminum sample (but not the overall current of the 6 samples), an ammeter was applied between the connection of aluminum sample and the coupling junction, as shown in Figure 1.

The effect of each inhibitor in water-ethylene glycol solution on the corrosion behavior of aluminum sample coupled with five other metals was evaluated separately. The results of potentiodynamic polarization tests for each chemical as corrosion inhibitor are shown in Figure 2. Table 1 also shows the electrochemical parameters of the potentiodynamic polarization tests. i_{corr} and E_{corr} were calculated using the Tafel extrapolation technique.

3.1. Sodium Diphosphate. The curve related to the effect of sodium diphosphate in Figure 2 shows considerable passivation region and low amount of i_{pass} (passivation current density). The corrosion potential (E_{corr}) was also observed to shift towards more noble potentials with respect to the reference state (the potentiodynamic polarization curve of aluminum sample in water-ethylene glycol solution without inhibitor), indicating the dominant anodic character of sodium diphosphate [27]. This anodic character was revealed by formation of a film on the surface of aluminum sample, which is shown in the related microscopic picture of the

Table 1: Electrochemical parameters of the potentiodynamic polarization tests for the studied solutions.

Type of inhibitor	E_{corr} (v) (vs. SCE)	i_{corr} (A/m^2)	E_{pass} (v) (vs. SCE)	i_{pass} (A/m^2)	$i_{critical}$ (A/m^2)	C.P.R (mpy)
No inhibitor (Fresh solution)	-0.12	2.2	-	-	-	94
Sodium diphosphate	-0.08	2	0.04	0.65	5	86
Sodium benzoate	-0.02	3.1	-	-	-	133
Sodium tetraborate	-0.6	2.3	-	-	-	99
No inhibitor (Thermal shocked solution)	-0.13	3.3	-	-	-	142

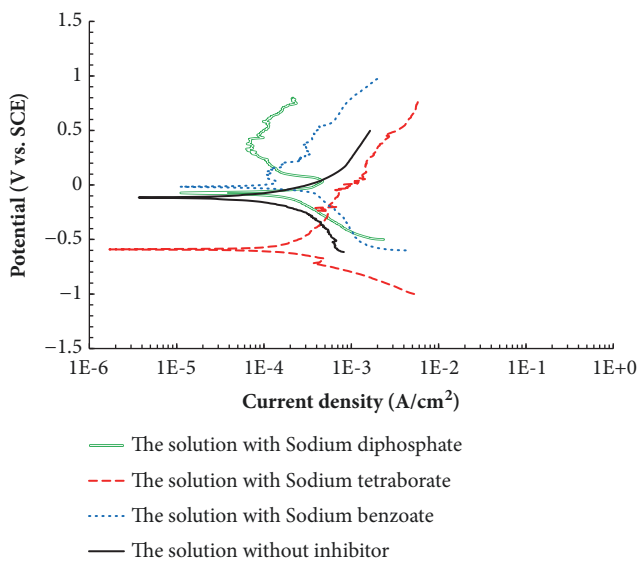

Figure 2: The corrosion behavior of aluminum alloy 3303 in galvanic coupling state with five other metals in different solutions.

aluminum sample in Figure 3. In addition, i_{corr} (corrosion current density) for the curve related to sodium diphosphate is also less than that of the reference state, as shown in Table 1, indicating that the corrosion rate has been decreased. Based on the observed effects of sodium diphosphate, it is inferred that this chemical can be an appropriate candidate as a corrosion inhibitor of aluminum alloy 3303 in water-ethylene glycol solution.

3.2. Sodium Benzoate. The potentiodynamic polarization curve related to sodium benzoate in Figure 2 does not show considerable passivation region. Very small intermittent passivation regions can be seen in the curve, which are the indications of unstable film formation on the surface of aluminum sample. Based on the fluctuations in anodic curve and comparing with the related microscopic picture in Figure 3, it is construed that the formed film on the aluminum surface is not stable and cannot protect the sample against corrosion. Comparing the potentiodynamic polarization curve related to sodium benzoate with the reference curve in Figure 2, it is shown that the curve related to sodium benzoate has shifted towards more noble potentials. This indicates the dominant anodic character of sodium benzoate in these conditions, which led to the nonprotective film formation. The slopes of the anodic and cathodic curves do not show considerable change with that of the reference state. This suggests that the presence of sodium benzoate does not alter the mechanism of reactions happening in the anode and cathode [28]. Based on Table 1, i_{corr} has been increases after presence of sodium benzoate, which is an indication of corrosion rate increase.

3.3. Sodium Tetraborate. The potentiodynamic polarization curve related to sodium tetraborate in Figure 2 does not show any passivation region. Base on Table 1, i_{corr} has also been increased with respect to the reference state, which is an indication of corrosion rate increase. The microscopic picture of the aluminum sample in contact with the solution containing sodium tetraborate also shows corrosion signs on the sample surface, as illustrated in Figure 3. Thus, it is revealed that sodium tetraborate cannot function as a proper corrosion inhibitor of aluminum alloy 3303 in these conditions. Since E_{corr} has shifted towards negative potentials, it is inferred that the cathodic behavior of sodium tetraborate is dominant.

It is worth noting that the dynamic conditions in the experiments can greatly prevent the adsorption of the inhibitors on the aluminum surface [21]. It means that the protective effect of inhibitors is expected to be increased in the static conditions.

3.4. The Effect of Thermal Shocking on the Corrosivity of Water-Ethylene Glycol Solution. The effect of thermal shocking on the corrosivity of water-ethylene glycol solution was studied and the results were compared with that of the corrosivity of fresh water-ethylene glycol solution, as shown in Figure 4. Based on the potentiodynamic polarization curves in Figure 4, the corrosivity of water-ethylene glycol solution has been increased after exposure to thermal shocking process. The corrosion rate of aluminum sample and also E_{corr} are higher in the thermal shocked solution in comparison to the fresh solution. The reason is related to oxidation of water-ethylene glycol solution due to thermal shocks, which leads to produce highly corrosive glycolic acid [5, 29]. Figure 3 shows the severe pitting corrosion on the surface of aluminum sample after the potentiodynamic polarization test of aluminum alloy 3303 in the thermal shocked water-ethylene glycol solution.

Figure 5 illustrates a comparison between corrosion rates of the aluminum alloy 3303 in different solutions. In this table,

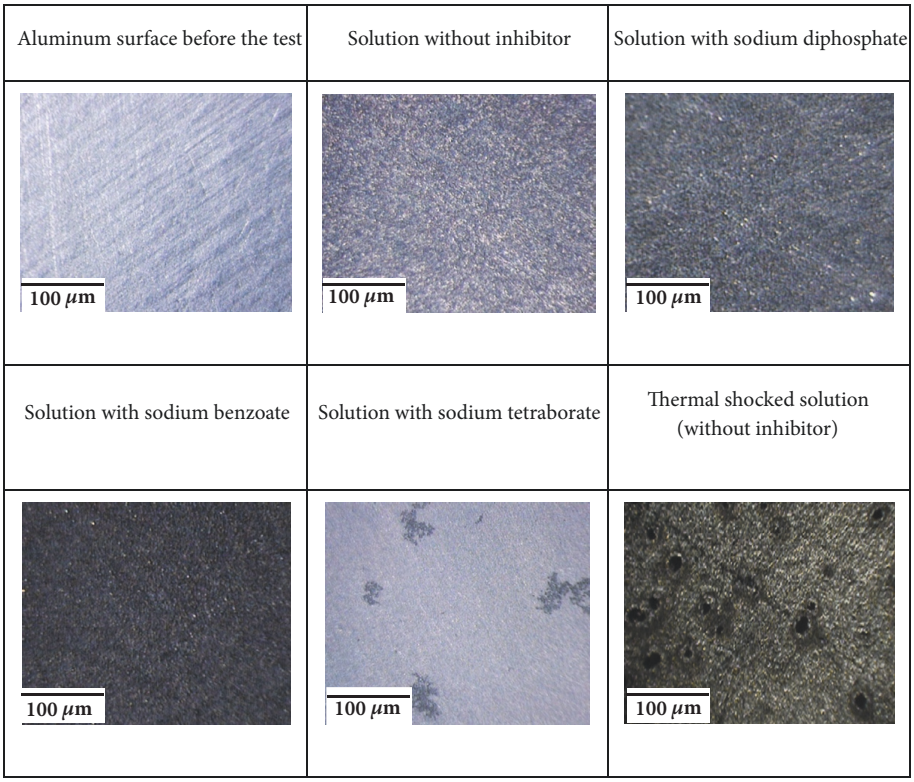

Figure 3: Optical micrographs of the aluminum alloy surfaces before and after the potentiodynamic polarization tests.

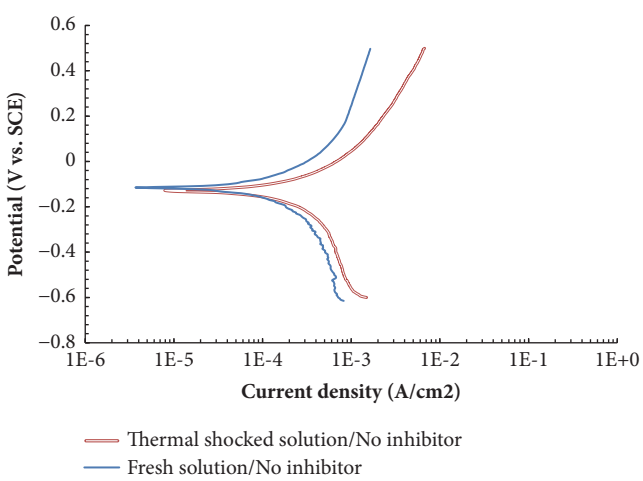

Figure 4: The corrosion behavior of aluminum alloy 3303 in galvanic coupling state with five other metals in the fresh and thermal shocked water-ethylene glycol solution without inhibitor.

Corrosion Penetration Rate (CPR) is calculated based on mils per year (mpy) according to the formula below:

$$CPR = 0.129\left(\frac{i_{corr}}{\rho}\right)\left(\frac{M}{n}\right) \quad (1)$$

in which i_{corr} is corrosion current density (μA/cm^2), M is atomic mass (g/mol), ρ is density of the sample (g/cm^3), and n is oxidation state.

Reduction of i_{corr} and corrosion rate has happened for the solution containing sodium diphosphate, which indicates the effectiveness of this chemical as corrosion inhibitor in these conditions. In addition, the corrosion rate has been increased for the aluminum sample in the thermal shocked solution, which is due to the oxidation of ethylene glycol because of thermal shocking.

4. Conclusion

Corrosion inhibitors are necessary to be added to the coolant in order to protect the metallic parts of the cooling system against corrosion. The effectiveness of added corrosion inhibitors in the functional environment and conditions of cooling system is critical. According to the results of electrochemical tests and considering the microscopic pictures, it was revealed that sodium diphosphate can protect the aluminum alloy 3303, coupled with five other metals consisting of mild steel, stainless steel, brass, copper and solder, in water-ethylene glycol solution in the working temperatures of internal combustion cooling systems. The inhibition effect of sodium diphosphate on the aluminum in water-ethylene glycol solution can be due to forming a stable passive film on the surface of aluminum. It was also shown that the thermal shocking can considerably affect the corrosivity of solution. It was proved that thermal shocking will increase the corrosivity of water-ethylene glycol solution on the aluminum alloy 3303 through oxidation of aqueous ethylene glycol. This result demonstrates the real conditions,

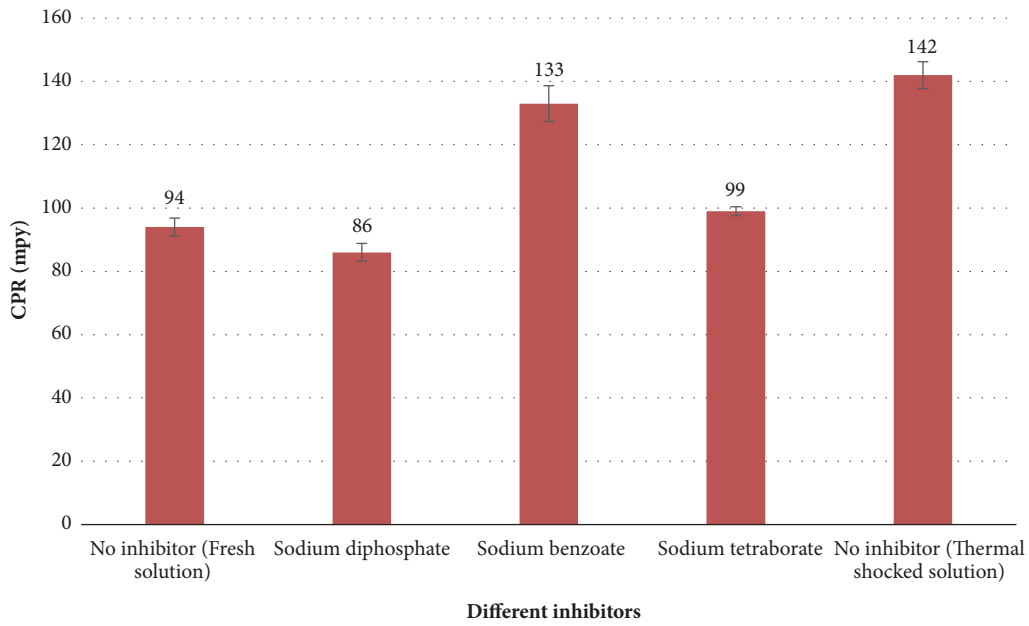

Figure 5: Corrosion rate of aluminum alloy 3303 in different solutions.

in which thermal shocking of the coolant happens along with the engine turning on and off.

Data Availability

All the data generated during this study were included in the article.

Conflicts of Interest

The authors declare that there are no conflicts of interest regarding this work.

Acknowledgments

This study was supported by Maham Imensaz Company. The managing director of Maham Imensaz Company is greatly acknowledged for technical discussions.

References

[1] C. Vargel, *Corrosion of Aluminium*, Elsevier, 2004.

[2] R. T. Bohacz, *Engine Cooling Systems HP1425: Cooling System Theory, Design and Performance for Drag Racing, Road Racing, Circle Track, Street Rods, Musclecars, Imports, OEM Cars, Trucks, RVs and Tow Vehicles*, Penguin, 2007.

[3] C. Mesa, *Engine Coolants*, Technology Transfer Systems, Inc, 2002.

[4] O. K. Abiola and J. O. E. Otaigbe, "Effect of common water contaminants on the corrosion of aluminium alloys in ethylene glycol-water solution," *Corrosion Science*, vol. 50, no. 1, pp. 242–247, 2008.

[5] J. Zaharieva, M. Milanova, M. Mitov, L. Lutov, S. Manev, and D. Todorovsky, "Corrosion of aluminium and aluminium alloy in ethylene glycol-water mixtures," *Journal of Alloys and Compounds*, vol. 470, no. 1-2, pp. 397–403, 2009.

[6] L. Niu and Y. F. Cheng, "Synergistic effects of fluid flow and sand particles on erosion-corrosion of aluminum in ethylene glycol-water solutions," *Wear*, vol. 265, no. 3-4, pp. 367–374, 2008.

[7] V. S. Sastri, *Corrosion Inhibitors: Principles and Applications*, Wiley, New York, NY, USA, 1998.

[8] R. M. Bandeira, J. van Drunen, A. C. Garcia, and G. Tremiliosi-Filho, "Influence of the thickness and roughness of polyaniline coatings on corrosion protection of AA7075 aluminum alloy," *Electrochimica Acta*, vol. 240, pp. 215–224, 2017.

[9] M. Mrad, Y. Ben Amor, L. Dhouibi, and M. F. Montemor, "Corrosion prevention of AA2024-T3 aluminum alloy with a polyaniline/poly(γ-glycidoxypropyltrimethoxysilane) bi-layer coating: Comparative study with polyaniline mono-layer feature," *Surface and Coatings Technology*, vol. 337, pp. 1–11, 2018.

[10] F. Saberi, B. S. Boroujeny, A. Doostmohamdi, A. R. Baboukani, and M. Asadikiya, "Electrophoretic deposition kinetics and properties of ZrO2 nano coatings," *Materials Chemistry and Physics*, vol. 213, pp. 444–454, 2018.

[11] C. Verma, E. E. Ebenso, and M. A. Quraishi, "Ionic liquids as green and sustainable corrosion inhibitors for metals and alloys: An overview," *Journal of Molecular Liquids*, vol. 233, pp. 403–414, 2017.

[12] I. B. Obot, I. B. Onyeachu, and S. A. Umoren, "Pyrazines as potential corrosion inhibitors for industrial metals and alloys: a review," *Journal of Bio- and Tribo-Corrosion*, vol. 4, no. 2, p. 18, 2018.

[13] A. K. Maayta and N. A. F. Al-Rawashdeh, "Inhibition of acidic corrosion of pure aluminum by some organic compounds," *Corrosion Science*, vol. 46, no. 5, pp. 1129–1140, 2004.

[14] V. Palanivel, Y. Huang, and W. J. Van Ooij, "Effects of addition of corrosion inhibitors to silane films on the performance of AA2024-T3 in a 0.5 M NaCl solution," *Progress in Organic Coatings*, vol. 53, no. 2, pp. 153–168, 2005.

[15] R. Rosliza, W. B. Wan Nik, and H. B. Senin, "The effect of inhibitor on the corrosion of aluminum alloys in acidic solutions," *Materials Chemistry and Physics*, vol. 107, no. 2-3, pp. 281–288, 2008.

[16] O. K. Abiola, J. O. E. Otaigbe, and O. J. Kio, "*Gossipium hirsutum* L. extracts as green corrosion inhibitor for aluminum in NaOH solution," *Corrosion Science*, vol. 51, no. 8, pp. 1879–1881, 2009.

[17] A. Aldykewicz, H. Isaacs, and A. Davenport, "The investigation of cerium as a cathodic inhibitor for aluminum-copper alloys," *Journal of The Electrochemical Society*, vol. 142, no. 10, pp. 3342–3350, 1995.

[18] A. Y. El-Etre, "Inhibition of aluminum corrosion using Opuntia extract," *Corrosion Science*, vol. 45, no. 11, pp. 2485–2495, 2003.

[19] M. L. Zheludkevich, K. A. Yasakau, S. K. Poznyak, and M. G. S. Ferreira, "Triazole and thiazole derivatives as corrosion inhibitors for AA2024 aluminium alloy," *Corrosion Science*, vol. 47, no. 12, pp. 3368–3383, 2005.

[20] K. Matsumoto, K. Inoue, K. Nakahara, R. Yuge, T. Noguchi, and K. Utsugi, "Suppression of aluminum corrosion by using high concentration LiTFSI electrolyte," *Journal of Power Sources*, vol. 231, pp. 234–238, 2013.

[21] M. A. Deyab, R. Essehli, and B. El Bali, "Performance evaluation of phosphite NaCo(H2PO3)3·H2O as a corrosion inhibitor for aluminum in engine coolant solutions," *RSC Advances*, vol. 5, no. 60, pp. 48868–48874, 2015.

[22] S. K. Sharma, A. Peter, and I. B. Obot, "Potential of Azadirachta indica as a green corrosion inhibitor against mild steel, aluminum, and tin: a review," *Journal of Analytical Science and Technology*, vol. 6, no. 1, p. 26, 2015.

[23] M. Asadikiya and M. Ghorbani, "Effect of inhibitors on the corrosion of automotive aluminum alloy in ethylene glycol-water mixture," *Corrosion*, vol. 67, no. 12, pp. 1260011–1260015, 2011.

[24] Y. Liu and Y. F. Cheng, "Effects of coolant chemistry on corrosion of 3003 aluminum alloy in automotive cooling system," *Materials and Corrosion*, vol. 61, no. 7, pp. 574–579, 2009.

[25] ASTM D1384-01, *Standard Test Method for Corrosion Test for Engine Coolants in Glassware*, Annual Book of ASTM standards, 2005.

[26] ASTM D5-94, *Standard Reference Test Method for Making Potentiostatic and Potentiodynamic Anodic Polarization Measurements*, Annual Book of ASTM standards, 1998.

[27] K. C. Emregül, A. Abdülkadir Akay, and O. Atakol, "The corrosion inhibition of steel with Schiff base compounds in 2 M HCl," *Materials Chemistry and Physics*, vol. 93, no. 2-3, pp. 325–329, 2005.

[28] M. A. Deyab, S. T. Keera, and S. M. El Sabagh, "Chlorhexidine digluconate as corrosion inhibitor for carbon steel dissolution in emulsified diesel fuel," *Corrosion Science*, vol. 53, no. 8, pp. 2592–2597, 2011.

[29] W. J. Rossiter Jr., P. W. Brown, and M. Godette, "The determination of acidic degradation products in aqueous ethylene glycol and propylene glycol solutions using ion chromatography," *Solar Energy Materials & Solar Cells*, vol. 9, no. 3, pp. 267–279, 1983.