Hindawi Publishing Corporation
International Journal of Distributed Sensor Networks
Volume 2013, Article ID 564869, 7 pages
http://dx.doi.org/10.1155/2013/564869

Research Article

Development of the Prediction System of Condensation Based on Wireless Communications

Shin-Hyeong Choi

Department of Control & Instrumentation Engineering, Kangwon National University, Joongang-ro, Samcheok-si, Gangwon-do 245-711, Republic of Korea

Correspondence should be addressed to Shin-Hyeong Choi; cshinh@kangwon.ac.kr

Received 22 May 2013; Revised 2 August 2013; Accepted 11 August 2013

Academic Editor: Tai-hoon Kim

Due to advances in microelectromechanical system (MEMS), many smart sensors have been developed. A large number of sensors build a wireless sensor network and can communicate with each other. Wireless sensor networks help monitor objects in our environment, and many researches about this technology are in progress. Condensation is a phenomenon that water vapor contained in the air condenses and makes water droplets. This is caused by the complex action of a variety of factors, including the temperature difference between indoor and outdoor and excessive indoor moisture, so it is never easy to identify the cause and establish measures for the actual building. In this paper, a system is presented to predict and alert condensation promptly and accurately, considering the causes and prevention of condensation. In this paper, a system will be developed to collect and monitor environmental information causing condensation, in real time using a wireless sensor network in order to build a system to prevent condensation. The users are expected to use this system to easily identify the cause of condensation and take actions based on the cause-specific alarm messages in order to alleviate aesthetics and hygiene problems due to condensation.

1. Introduction

Recently the convergence with IT skills has been accelerated in all business sectors, playing the role of the core technology to increase the added value in all industrial areas. Especially, sensor networks can be applied in very diverse fields. At first, representative field was the intelligent traffic control system which employs monitoring and so forth. In recent years, the applications have been extended to various fields such as environmental monitoring, observation of natural phenomena, and endangered species protection, in addition to factories with automated production equipment [1–3].

On the other hand, the apartment condensation phenomenon has been a growing problem in recent years due to abnormal weather and the problems of apartment construction methods. Condensation occurs when temperature of the surface is lower than indoor air temperature or the saturated water vapor in the air is too much; some examples are water droplets on the surface of a cold glass in the summer or water droplets on the tile in a bathroom. Condensation phenomenon is caused by the complex action of a variety of factors, including the temperature difference between indoor and outdoor and excessive indoor moisture, so it is never easy to identify the cause and establish measures for the actual building. Condensation is not a serious problem in conventional buildings above the ground, except for some underground structures. In public housing such as apartments, however, condensation is common due to poor ventilation, emphasizing only the functional improvement of building materials such as insulation to satisfy the occupants, who want a pleasant high quality residential environment. In addition, the use of building materials with excellent air tightness and thermal insulation makes the clear-cut distinction between successful and failed insulation, causing further condensation. In order to prevent condensation, ventilation and reinforced insulation are generally used. Such condensation defects occur in curtain wall, balcony, door frame, and window in winter season and partly in relatively low temperature area such as basement wall in hot and humid summer time. Condensation causes aesthetically poor appearance due to traces such as black stain on the wall, unclean hygiene, and property damage such as damaged finish.

Previous studies related on the condensation have been focused on the development and improvement of the technology including condensation survey, measurements, and performance evaluation of condensation preventing materials through experiments and proposing appropriate insulation thickness simulation. The purpose of the present study is to examine the causes and prevention measures of condensation, based on an accurate understanding of the condensation through a general study on the condensation and to present a system that predicts and alerts condensation quickly, accurately, and early. In this paper, a system is developed to collect and monitor environmental information causing condensation in real time using a wireless sensor network, to build a system to prevent condensation. The users are expected to use this system to easily identify the cause condensation and take actions based on the cause-specific alarm messages in order to alleviate aesthetics and hygiene problems due to condensation.

This paper is organized as follows: Section 2 describes related works in condensation; Section 3 presents the systems structure and condensation prediction algorithm developed by this study; Section 4 describes implementation of prediction system of condensation; Section 5 concludes with a brief summary.

2. Condensation

Condensation is a phenomenon that water vapor contained in the air condenses and makes water droplets, when air containing water vapor contacts with the surface with temperature equal to or lower than dew point of the air. In general, if the temperature of the air rises, the saturated water vapor increases; the temperature rise of 10°C makes about twice the saturated water vapor. When warm air containing a lot of water vapor contacts the surface of low temperature, the air cools down and the water vapor cannot be contained any more making water droplets on the surface. This phenomenon is called condensation, and the temperature at which condensation begins is called the dew point temperature. The saturated water vapor in the air varies depending on the temperature. Lowering temperature reduces the saturated water vapor in the air, to reach the maximum saturated water vapor that cannot hold any more water vapor in the air despite no change in the absolute water vapor in the air (absolute humidity). Further lowering of the temperature condenses the air into water droplets very soon. The vapor pressure of water is the pressure at which water vapor is saturated (Figure 1). Here, the saturated state means the maximum amount of water vapor or the relative humidity of 100%, which is affected by the temperature. Lowering the temperature of the air that maintains a constant humidity increases the gradual rise in the relative humidity until 100% when a certain temperature is reached. The temperature when the relative humidity gets 100% is called the dew point temperature, which is determined by the water vapor content of the air, that is, the absolute humidity or water vapor pressure. The more the water vapor content is, the higher the possibility of condensation is [4–8].

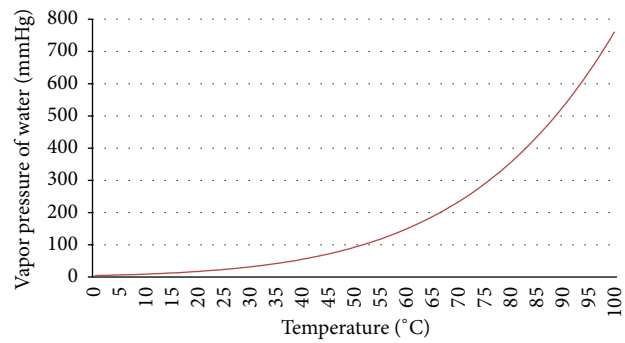

Figure 1: Vapor pressure of water.

2.1. Causes of Condensation. Factors such as outdoor temperature, indoor temperature, and humidity are the causes of the condensation. In case of indoor temperature and humidity, low temperature and high humidity cause condensation, while high temperature and low humidity reduce the chance of condensation. Table 1 shows the dew point temperatures considering the relationship between the temperature and relative humidity [9]. Temperature that is 3°C higher than the dew point temperature is considered the safety temperature that is free from the dew point because condensation generally does not occur at the temperature. In other words, as the room temperature gets higher, the lower becomes the possibility of condensation due to the increased surface temperature of the wall. For example, when the indoor temperature is 20°C and relative humidity is 70% in Table 1, the surface temperature of the walls may be raised to 17.4°C, which is 3°C more than the dew point temperature of 14.4°C, to prevent condensation. In addition, the house condensation occurs when water vapor arising from the day-to-day life could not be adequately removed, which is caused by the heating system, indoor temperature, the lack of ventilation, and the cold surface temperature due to the descent of the outside temperature. Under the influence of the ambient low temperature in winter, the indoor side of the outer wall surface temperature gets lower than the indoor air. The lower the temperature, the lower the amount of water vapor that the air can contain, so when the air containing a certain amount of water vapor touches the surface of the wall, the temperature of the air in that part gets lower to the temperature of the surface, causing the excess moisture in the vapor state to turn to water droplets, the condensation on the surface.

2.2. Damage by Condensation. Damage caused by condensation in buildings is divided into direct damage and indirect damage. Direct damage is the damage from the condensation liquid water itself, causing damage to material or products by the fall of water on the ceiling or causing risk to the building by the fall of icicles of condensation water which occurred in the area of the exterior finish. Indirect damage is the damage by the increased water content in building materials by the condensation water, causing structure damage by inner condensation and inside damage such as fungi, detachment or contamination of the finishes, discoloration of the timber, the collapse of the gypsum board, or carpet wetting.

Table 1: Dew point table.

Air temperature	Relative humidity								
	50%	55%	60%	65%	70%	75%	80%	85%	90%
5°C	−4.1°C	−2.9°C	−1.8°C	−0.9°C	0.0°C	0.9°C	1.8°C	2.7°C	3.6°C
6°C	−3.2°C	−2.1°C	−1.0°C	−0.1°C	0.9°C	1.8°C	2.8°C	3.7°C	4.5°C
7°C	−2.4°C	−1.3°C	−0.2°C	0.8°C	1.8°C	2.8°C	3.7°C	4.6°C	5.5°C
8°C	−1.6°C	−0.4°C	0.8°C	1.8°C	2.8°C	3.8°C	4.7°C	5.6°C	6.5°C
9°C	−0.8°C	0.4°C	1.7°C	2.7°C	3.8°C	4.7°C	5.7°C	6.6°C	7.5°C
10°C	0.1°C	1.3°C	2.6°C	3.7°C	4.7°C	5.7°C	6.7°C	7.6°C	8.4°C
11°C	1.0°C	2.3°C	3.5°C	4.6°C	5.6°C	6.7°C	7.6°C	8.6°C	9.4°C
12°C	1.9°C	3.2°C	4.5°C	5.6°C	6.6°C	7.7°C	8.6°C	9.6°C	10.4°C
13°C	2.8°C	4.2°C	5.4°C	6.6°C	7.6°C	8.6°C	9.6°C	10.6°C	11.4°C
14°C	3.7°C	5.1°C	6.4°C	7.5°C	8.6°C	9.6°C	10.6°C	11.5°C	12.4°C
15°C	4.7°C	6.1°C	7.3°C	8.5°C	9.5°C	10.6°C	11.5°C	12.5°C	13.4°C
16°C	5.6°C	7.0°C	8.3°C	9.5°C	10.5°C	11.6°C	12.5°C	13.5°C	14.4°C
17°C	6.5°C	7.9°C	9.2°C	10.4°C	11.5°C	12.5°C	13.5°C	14.5°C	15.3°C
18°C	7.4°C	8.8°C	10.2°C	11.4°C	12.4°C	13.5°C	14.5°C	15.4°C	16.3°C
19°C	8.3°C	9.7°C	11.1°C	12.3°C	13.4°C	14.5°C	15.5°C	16.4°C	17.3°C
20°C	9.3°C	10.7°C	12.0°C	13.3°C	14.4°C	15.4°C	16.4°C	17.4°C	18.3°C
21°C	10.2°C	11.6°C	12.9°C	14.2°C	15.3°C	16.4°C	17.4°C	18.4°C	19.3°C
22°C	11.1°C	12.5°C	13.8°C	15.2°C	16.3°C	17.4°C	18.4°C	19.4°C	20.3°C
23°C	12.0°C	13.5°C	14.8°C	16.1°C	17.2°C	18.4°C	19.4°C	20.3°C	21.3°C
24°C	12.9°C	14.4°C	15.7°C	17.0°C	18.2°C	19.3°C	20.3°C	21.3°C	22.3°C
25°C	13.8°C	15.3°C	16.7°C	17.9°C	19.1°C	20.3°C	21.3°C	22.3°C	23.2°C
26°C	14.8°C	16.2°C	17.6°C	18.8°C	20.1°C	21.2°C	22.3°C	23.2°C	24.2°C
27°C	15.7°C	17.2°C	18.6°C	19.8°C	21.1°C	22.2°C	23.2°C	24.2°C	25.3°C
28°C	16.6°C	18.1°C	19.5°C	20.8°C	22.0°C	23.2°C	24.2°C	25.2°C	26.2°C
29°C	17.5°C	19.1°C	20.5°C	21.7°C	22.9°C	24.1°C	25.2°C	26.2°C	27.2°C
30°C	18.4°C	20.0°C	21.4°C	22.7°C	23.9°C	25.1°C	26.2°C	27.2°C	28.2°C

2.3. Measures to Prevent Condensation. Condensation occurs when the excessive humidity and the cold surface temperature met; it is easier to adjust the amount of humidity in the room than to control the external temperature. The easiest method in everyday life is lowering indoor humidity by periodic ventilation and preventing humidity with forced ventilation through using the dehumidifier or ventilation device in a confined space, like a basement or garage. Vapor that inevitably occurs in everyday life can be removed through rapid ventilation to reduce indoor humidity; even if condensation occurs, it may be removed quickly through early awareness of this: ventilation, dehumidification, and indoor temperature control.

3. System Architecture

In this paper, a system is presented to predict and alert condensation promptly and accurately, considering the causes and prevention of condensation. Our system is developed to collect and monitor environmental information causing condensation, in real time using a wireless sensor network in order to build a system to prevent condensation. We describe the structure, components, and support services of the proposed system for the prevention of condensation in this section.

3.1. System Structure. The condensation prediction system comprises the sensor field, which is a set of a large number of sensor nodes, a server to store and manage data collected from the sensor field, and smart phone-based monitoring applications, as shown in Figure 2. The sensor field is composed of several sensor nodes called a Mote, which are installed in indoor and outdoor managed spaces. Temperature and humidity values gathered from these sensor nodes are transmitted to the sink node connected to the server. In addition, data management server and smart phone are connected by TCP/IP communication. The data is stored in the database via parsing process, and these data can be checked through the monitoring program on the server in real time.

3.2. System Components. As shown in Figure 3, places where condensation is very likely to occur are selected as the sensor field to deploy sensor nodes. Generally, sensor network technology can be configured of sensor nodes, operating system for sensor nodes, protocols for information exchange

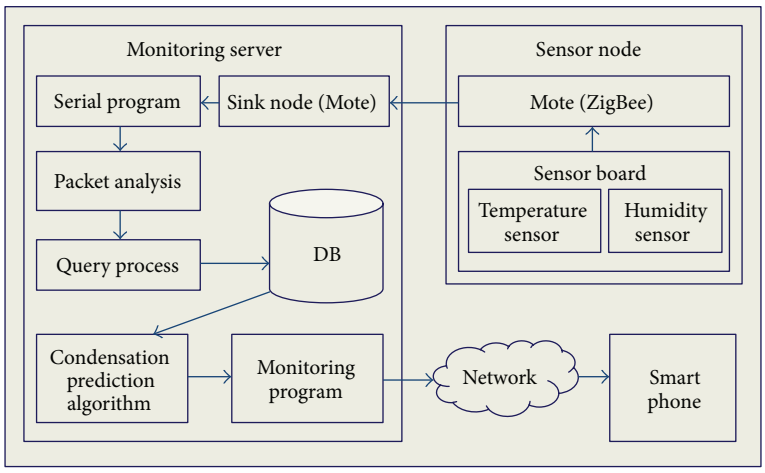

Figure 2: Structure of our system.

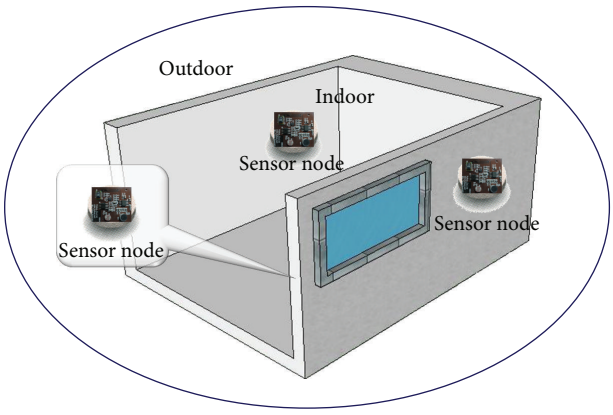

Figure 3: Deployment of sensor node.

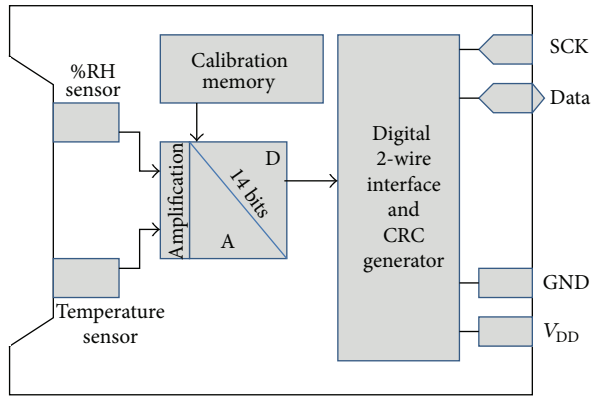

Figure 4: Block diagram of SHT11.

between sensor nodes and the operating system or between sensor nodes, power consumption saving technology, and sensor location measurement techniques [10–16]. In this paper, the sensor node consisting of H-sensor Board and Hmote2420 (Hybus, Korea) was used.

(1) Sensor Board. As shown in Figure 4, the H-sensor Board uses SHT11 (Sensirion, Switzerland) consisting of temperature and humidity sensors.

The accuracy of the temperature and the relative humidity measurements of SHT11 is ±0.5°C and ±3.5%, respectively.

(2) Mote. Hmote2420 uses 16-bit TI MSP430 for processing and CC2420 as a transceiver for wireless communication at 2.4 GHz. Hmote2420 also supports ultralow-power consumption (RX: 19.7 mA, TX: 17.4 mA, Standby: 1.1 μA, and off: 0.2 μA), has built-in PCB antennas, and provides expansion ports for diverse sensor expansions. Hmote2420 and H-sensor Board are connected through the 40-pin connector, which connects to each port of the MSP430.

The server, which stores and manages the data collected from the sensor field, receives temperature and humidity

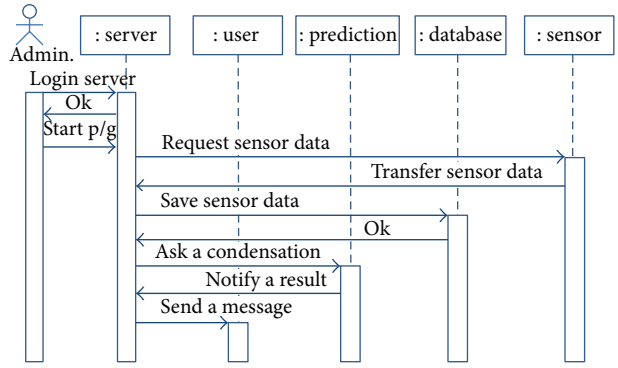

Figure 5: Monitoring process.

values wirelessly transmitted from the sink node that is connected via a USB port and stores the data on the database.

There are two main functions. The first function is the input stream processing of the stream form data received through the sink node in the format that can be stored in the condensation management database. The second function is

Step 1.
Measure of temperature indoor, outdoor and surface.
T_i = indoor temperature, T_o = outdoor temperature, T_s = surface temperature
Measure of relative humidity indoor.
H_i = indoor relative humidity
Step 2.
Calculate dew point temperature.
T_d = dew point temperature
Step 3.
Estimate value of condensation.
If $|T_s - T_d| < 3$ then Condensation
Else Normal

Algorithm 1: Condensation prediction algorithm.

data storage and management function that stores the processed data in the condensation management database using update queries. Condensation management database stores temperature and humidity values transmitted from sensor nodes deployed in managed space, data such as the dew point temperature to predict the condensation based on the temperature and humidity data, and the status information. The data management server inspects the condensation management database at regular intervals using the condensation prediction algorithm and displays the alarm prompts on the monitor screen or on the smart phone if the condensation is predicted.

3.3. System Applications. The condensation prediction system proposed in this paper is divided into the monitoring program to determine the environmental information such as indoor and outdoor temperatures and humidities in the managed space and the prediction program that can display the condensation alarm messages to the user via the condensation prediction algorithm.

3.3.1. Monitoring Program. Environmental information monitoring program is a program that provides users with environmental information such as temperature and humidity values gathered from the sensors in order to determine the status of the indoors and outdoors. Indoor temperature, outdoor temperature, and relative humidity are measured from the sensors deployed in managed space and transmitted to the data management module on the server at regular time intervals through the sink nodes. The data management module analyzes the received data, extracts the data by the temperature and humidity, converts the format, and stores them on the condensation management database. Environmental information monitoring program displays the environmental information stored in condensation management database in real time on the screen of the management server. Figure 5 shows the process of the behavior of the environmental information monitoring program in a sequence diagram.

3.3.2. Condensation Prediction Program. Condensation prediction program analyzes the environmental information transmitted from the sensors through the condensation algorithm and informs the condensation alarm prompts on the monitor screen on the management server and user smart phone for the places where condensation is predicted. Algorithm 1 shows the condensation prediction algorithm.

Based on the condensation prediction algorithm shown in Algorithm 1, condensation occurs when the difference in temperature between dew point and surface is over 3 degrees Celsius.

4. System Implementation

4.1. Implementation Environment. The system implemented in this paper can be divided into three: sensor nodes, management servers, and smart phone. The sensor node uses an operating system called TinyOS developed by UC Berkeley.

The management server uses Microsoft's Windows XP as the operating system; the monitoring program is prepared using Visual Basic and SQLite. The application for smart phone is developed in Eclipse (Ver. Helios) development environment, screen design by xml file, and the source code based on Java.

4.2. Implementation Results. The system can be implemented by deploying sensor nodes in outdoor and indoor walls, respectively, and connecting sink nodes to the management server, in order to display the data such as temperature and humidity values gathered from each sensor node through the environment information monitoring program of the server. This environment information is stored in the condensation management database; condensation prediction algorithm is applied for the collected temperature and humidity values; the predicted condensation is transmitted to the smart phone by alarm prompts. Helped by this message, users can take measures such as ventilation or heating for the area where condensation is predicted. Figure 6 shows the user interface program of management server and smart phone.

As shown in Figure 6, condensation occurs in the area no. 2. Indoor, outdoor, and surface temperatures are 22.43, 15.12, and 16.30 degrees Celsius, respectively. And relative humidity is 80%. Based on the condensation prediction algorithm shown in Algorithm 1 and dew point table shown in Table 1, dew point temperature is about 18.4 degrees Celsius.

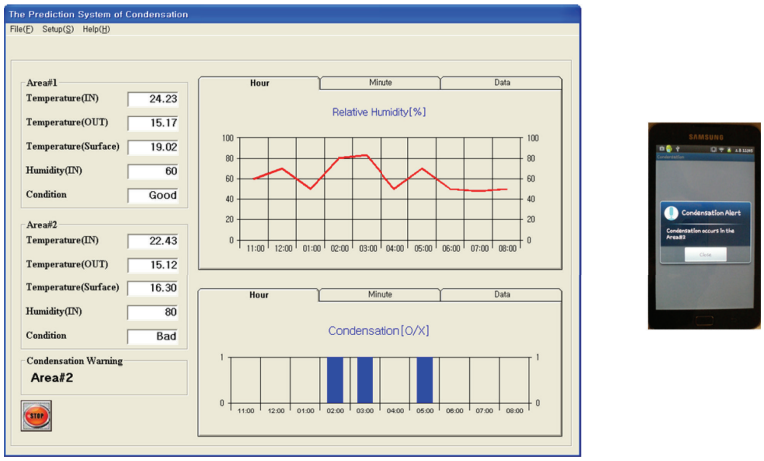

Figure 6: Implementation of monitoring user interface.

In this case, condensation occurrence place is displayed on the monitor screen, and then condensation warning message is transmitted to the smart phone.

5. Conclusions

Recently the apartment condensation phenomenon has been a growing problem due to abnormal weather and the problems of apartment construction methods. Condensation phenomenon is caused by the complex action of a variety of factors, including the temperature difference between indoor and outdoor and excessive indoor moisture, so it is never easy to identify the cause and establish measures for the actual building. The present study discussed the prediction system of condensation using wireless sensor networks. In this paper, a system is presented to predict and alert condensation promptly and accurately, considering the causes and prevention of condensation. Our system was developed to collect and monitor environmental information causing condensation, in real time using a wireless sensor network in order to build a system to prevent condensation. The users are expected to use this system to easily identify the cause of condensation and take actions based on the cause-specific alarm messages in order to alleviate aesthetics and hygiene problems due to condensation.

References

[1] K. Römer and F. Mattern, "The design space of wireless sensor networks," *IEEE Wireless Communications*, vol. 11, no. 6, pp. 54–61, 2004.

[2] K. Sharma, M. K. Ghose, D. Kumar, R. P. K. Singh, and V. K. Pandey, "A comparative study of various security approaches used in wireless sensor networks," *International Journal of Advanced Science and Technology*, vol. 17, pp. 31–44, 2010.

[3] S. K. Singh, M. P. Singh, and D. K. Singh, "Intrusion detection based security solution for Cluster-based wireless sensor networks," *International Journal of Advanced Science and Technology*, vol. 30, pp. 83–95, 2011.

[4] M. Rama Narasimha Reddy, M. Yohan, and K. Harshavardhan Reddy, "Heat transfer co-efficient through dropwise condensation and filmwise condensation apparatus," *International Journal of Scientific and Research Publications*, vol. 2, no. 12, pp. 1–4, 2012.

[5] S. Y. Yoo, *Facade design for prevention from condensation of apartment housing with expanded balcony [M.S. thesis]*, Yonsei University, Seoul, Republic of Korea, 2007.

[6] H. J. Hwang, J. Y. Kim, and J. S. Lee, "A study on the foundation of the standard of temperature and humidity for preventing condensation in apartment housings," *LHI Journal*, vol. 2, no. 3, pp. 269–276, 2011.

[7] C. G. Roh, *Selecting the location of the air-vents for preventing the surface condensation of ammunition storage facilities in summer season [M.S. thesis]*, Hanyang University, Seoul, Republic of Korea, 2008.

[8] http://en.wikipedia.org/wiki/Vapor_pressure_of_water.

[9] http://www.lesonal.co.uk/_layouts/ancrdownload.aspx?DocUrl=/lesonal/uk/Products/ChartsGuides -Tips /Dewpoint-Table.pdf.

[10] N. Ahmad, N. Riaz, and M. Hussain, "Ad hoc wireless sensor network architecture for disaster survivor detection," *International Journal of Advanced Science and Technology*, vol. 34, pp. 9–16, 2011.

[11] M. Tubaishat and S. Madria, "Sensor networks: an overview," *IEEE Potentials*, vol. 22, no. 2, pp. 20–23, 2003.

[12] R. Sheikhpour and S. Jabbehdari, "A two-level cluster based routing protocol for wireless sensor networks," *International Journal of Advanced Science and Technology*, vol. 45, pp. 19–30, 2012.

[13] D. Puccinelli and M. Haenggi, "Wireless sensor networks: applications and challenges of ubiquitous sensing," *IEEE Circuits and Systems Magazine*, vol. 5, no. 3, pp. 19–29, 2005.

[14] Z. Wang and K. Zhang, "Energy meter monitoring sensor network technology research," in *Proceedings of the China International Conference on Electricity Distribution (CICED '10)*, pp. 1–7, September 2010.

[15] G. Yoo and E. Lee, "Self-healing methodology in ubiquitous sensor network," *International Journal of Advanced Science and Technology*, vol. 3, pp. 9–18, 2009.

[16] J. Wang, Z. Cheng, I. Nishiyama, and Y. Zhou, "Design of a safety confirmation system integrating wireless sensor network and smart phones for disaster," in *Proceedings of the IEEE 6th International Symposium on Embedded Multicore (SoCs '12)*, pp. 139–143, 2012.