Hindawi
International Journal of Optics
Volume 2020, Article ID 5683264, 12 pages
https://doi.org/10.1155/2020/5683264

Research Article

Low-Glare Freeform-Surfaced Street Light Luminaire Optimization to Meet Enhanced Road Lighting Standards

Jetter Lee,[1] Lanh-Thanh Le,[1,2] Hien-Thanh Le,[1,2] Hsing-Yuan Liao,[1] Guan-Zhi Huang,[1] Hsin-Yi Ma,[3] Chan-Chuan Wen,[4] Yi Chin Fang,[5] Chao-Hsien Chen,[6] Shun-Hsyung Chang,[7] and Hsiao-Yi Lee[1,8]

[1]*Department of Electrical Engineering, National Kaohsiung University of Science and Technology, Kaohsiung 80778, Taiwan*
[2]*Department of Technology, Dong Nai Technology University, Bien Hoa 830000, Vietnam*
[3]*Department of Industrial Engineering and Management, Minghsin University of Science and Technology, Hsinchu 30401, Taiwan*
[4]*Department of Shipping Technology, National Kaohsiung University of Science and Technology, Kaohsiung, Taiwan*
[5]*Department of Mechatronics Engineering, National Kaohsiung University of Science and Technology, Kaohsiung, Taiwan*
[6]*Department of Mechanical Engineering, National Kaohsiung University of Science and Technology, Kaohsiung, Taiwan*
[7]*Department of Microelectronics Engineering, National Kaohsiung University of Science and Technology, Kaohsiung, Taiwan*
[8]*Department of Graduate Institute of Clinical Medicine, Kaohsiung Medical University, Kaohsiung 807, Taiwan*

Correspondence should be addressed to Hsiao-Yi Lee; leehy@nkust.edu.tw

Received 18 March 2020; Revised 15 June 2020; Accepted 2 July 2020; Published 28 August 2020

Academic Editor: E. Bernabeu

To enhance driving safety at night, a new freeform-surface street light luminaire was proposed and evaluated in this study that meets the requirements of the International Commission on Illumination (CIE) M3 class standard for road lighting. The luminaire was designed using simulations to optimize the location of the bulb according to the requirements of the standard. The light source IES file was experimentally obtained for the optimized luminaire prototype with a 150 W ceramic metal halide lamp using an imaging goniophotometer. The trial road lighting simulation results computed by the lighting software DIALux indicated that the proposed luminaire provided an average road surface brightness of 1.1 cd/m^2 (compared to a minimum requirement of 1.0 cd/m^2), a brightness uniformity of 0.41 (compared to a minimum requirement of 0.4), a longitudinal brightness uniformity of 0.64 (compared to a minimum requirement of 0.6), and a glare factor of 7.6% (compared to a maximum limit of 15%). The findings of the image goniophotometer tests were then confirmed by the results of a certified mirror goniophotometer test conducted by the Taiwan Accreditation Foundation (TAF). The results of this study can be used to provide improved street lighting designs to meet enhanced international standards.

1. Introduction

Road lighting has a considerable influence on traffic safety and the quality of the human environment [1–3] and is thus an indispensable component of pathways [4, 5], sidewalks, and road equipment [6–8]. On roads, high visibility and facial recognition are imperative components of the interactions between users [9, 10], and several studies of road lighting have accordingly demonstrated the benefits of public lighting installations on road safety, crime prevention, and traffic flow [1–3, 11]. Currently employed street lighting technology is built upon years of experience and research [6–8, 12, 13]. However, it is necessary to improve street lighting quality in terms of efficiency, road surface luminance, illumination uniformity, and glare reduction to meet recent updates to international standards [14, 15].

Lighting quality plays an important role in determining the visual performance and comfort of road users and can keep drivers alert to reduce the incidence of car accidents. Indeed, inferior lighting conditions can have negative effects on mobility behavior, subjective perception of public space, and traffic safety [16]. In particular, the subjective experience of safety and security outdoors at night is considerably influenced by street lighting performance [17–19]. The luminaire mounting height, street light spacing, luminaire inclination angle, and road surface properties are essential for ensuring the desired street lighting performance, measured in terms of the average road surface brightness, brightness uniformity, longitudinal brightness uniformity, and threshold increment (glare factor) [1–3, 20]. Furthermore, though the use of light-emitting diode (LED) technology requires less energy consumption and can provide longer-lasting lighting than conventionally used discharge lamps [21–24], there remain several disadvantages to the use of LED lights, such as their higher cost, unpredictable lifetime, and excess blue/white glare for human eyes [25–27].

In this study, a freeform-surfaced luminaire is therefore proposed and demonstrated to meet the requirements of the CIE M3 class standard using a 150 W ceramic metal halide discharge lamp. Based on the experimental results, a road lighting plan for a trial road is then evaluated using the proposed luminaire considering the requirements of the CIE M3 class standard.

2. Luminaire Design Principles

A freeform-surface street light luminaire should be designed and developed in accordance with relevant lighting standards and specifications in order to ensure that it provides sufficient luminance and uniformity performance. According to the International Commission on Illumination (CIE) standard, the parameters of lighting quality include the average road surface luminance, L_{avg}, brightness uniformity, U_o, longitudinal brightness uniformity, U_L, and threshold increment (glare factor), TI [1–3, 5–8, 28]. The CIE standards provide different lighting parameter requirements according to level, as shown in Table 1 [6, 9–11, 24–27, 29, 30].

The average luminance, L_{avg}, is the brightness of the road surface as experienced by a driver and must be maintained above a certain level throughout the entire service life of the luminaire. It is related to the light distribution of the luminaire and its installation position as well as the reflective properties of the road surface. The overall uniformity of road surface luminance, U_o, is a measure of how evenly lit the road surface is; a low U_o value means that there is a significant change in luminance on the road [1–6, 8–10, 28]. It is determined by dividing the minimum value of luminance, L_{min}, by the average luminance, L_{avg}, as given by

$$U_O = \frac{L_{min}}{L_{avg}}. \tag{1}$$

Table 1: CIE standards for street lighting [6, 22].

Lighting level	Stipulated lighting quality parameters			
	L_{avg}	U_o	U_l	TI
M1	2.0	0.4	0.7	10
M2	1.5	0.4	0.7	10
M3	1.0	0.4	0.6	15
M4	0.75	0.4	0.6	15
M5	0.5	0.35	0.4	15
M6	0.3	0.35	0.4	20

The longitudinal uniformity of road surface luminance, U_L, is related to the comfort of the driver under the subject lighting environment, determined as the ratio of L_{min} to the maximum luminance, L_{max}, on the road, as given by

$$U_L = \frac{L_{min}}{L_{max}}. \tag{2}$$

The threshold increment TI is a measurement of the visibility loss caused by the road lighting equipment and is calculated by determining whether the incremental percentage of luminance difference of an object can be clearly identified in the presence of glare. The TI is thus a measure of the loss of contrast due to light shining directly from the luminaire into a driver's eye. This effect is commonly referred to as disability glare. The physiological effects of disability glare increase with driver age, so it is of particular concern in any country with an aging driving population. To calculate TI, if $0.05\ \text{cd}\cdot\text{m}^{-2} < L_{avg} < 5\ \text{cd}\cdot\text{m}^{-2}$, then

$$\text{TI} = \frac{65L_v}{L_{avg}^{0.8}}, \tag{3}$$

and if $L_{avg} > 5\ \text{cd}\cdot\text{m}^{-2}$, then

$$\text{TI} = \frac{95L_v}{L_{avg}^{1.05}}, \tag{4}$$

where L_v is the luminance of the light curtain displayed by n lighting lamps in the field of vision ($\text{cd}\cdot\text{m}^2$), determined by

$$L_v = \sum_{i-1}^{n} \frac{E_{eye,i}}{\theta_i^2}, \tag{5}$$

where $E_{eye,i}$ is the illuminance on the plane perpendicular to the sight line for a viewer's eye height 1.5 m above the road (lux), θ is the angle (in radians) between the line of sight and the center of the luminaire, n is the number of luminaires in the field of view, and k is a constant that varies with the age of the viewer A according to

$$K = 9.86 \cdot \left(1 + \left(\frac{A}{66.4}\right) \cdot 4\right). \tag{6}$$

The objective of this study was to design a freeform-surfaced luminaire for a street light that meets the CIE M3 class lighting standards in order to provide a safe and comfortable road lighting environment for drivers. The flow chart of the luminaire design for the new street light is shown in Figure 1. In order to provide a more accurate optical simulation, a physical source model of the Philips Lighting

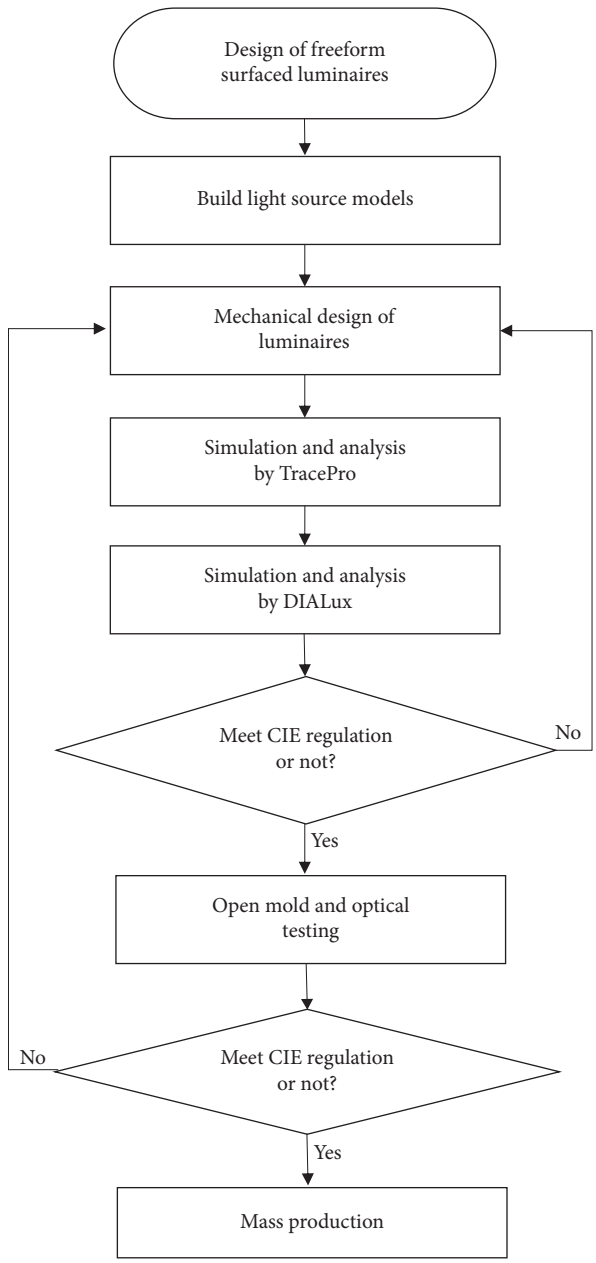

Figure 1: Flow chart for the design of a freeform-surface street light luminaire [6, 23].

MASTERColour CDM-T Elite 150 W/930 G12 1CT/12 metal halide lamp to be used with the proposed luminaire was built according to the relevant structural specifications and the specified light distribution, as shown in Figures 2 and 3, respectively. Using the resulting metal halide lamp physical source model, a new street light luminaire was designed and used to create a trial road lighting plan that meets the CIE M3 class requirements.

3. Design of Freeform-Surfaced Luminaire

In this study, a new street lighting luminaire was designed using a freeform-surfaced optical reflector for a metal halide lamp in order to provide CIE standard street lighting.

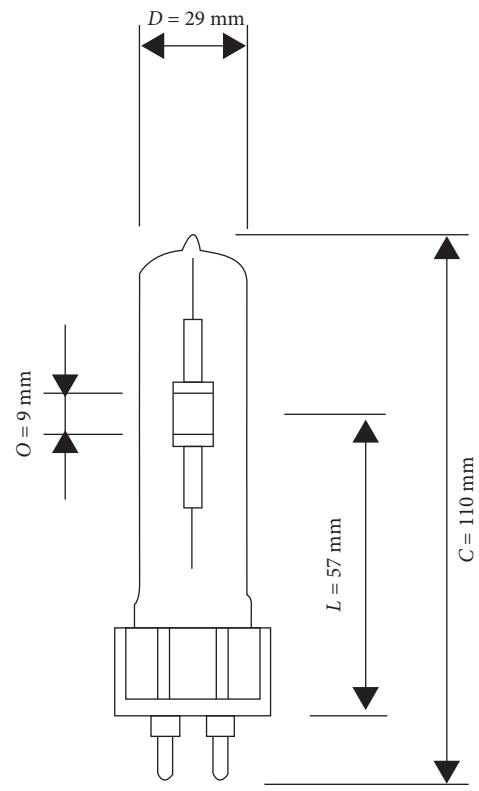

Figure 2: Structural specification of the Philips MASTERColour CDM-T Elite 150 W/930 G12 1CT/12 bulb [6].

Accordingly, a source model of the Philips MASTERColour bulb was constructed and analyzed using the SolidWorks mechanical design software and TracePro optical analysis software, respectively. The resulting source model and its simulated light intensity distribution curve (LIDC) are shown in Figure 4. The optical reflector of the luminaire designed in this study is comprised of multisegmented mirror surfaces and is 251.162 mm long and 173.716 mm wide, as shown in Figure 5. The light source model and the freeform-surfaced luminaire model files from SolidWorks were imported into the TracePro optical simulation software, where the light source parameters and the luminaire surface properties were set in order to obtain the LIDC and the IES far field source file for the new street light luminaire.

In order to conduct a road lighting analysis using the proposed streetlight luminaire on a trial road as per the CIE standard test, the road environment parameters, street light arrangement, and illumination parameters were set in the DIALux lighting design software to calculate L_{avg}, U_o, U_L, and TI. The street light parameters are shown in Figure 6 and included a luminaire height of 12 m, a distance between lamp pole and luminaire of 2 m, a length of protrusion of 1.5 m, and an arm inclination of 15°. The trial road environment was 14 m wide carrying four lanes and the spacing between the light poles was 50 m along on only one side of the road, as shown in Figure 7.

In order to optimize the design of the proposed luminaire to meet the CIE M3 class standard, the add-on ray tracing simulation tool OptisWorks (Optis SAS, La

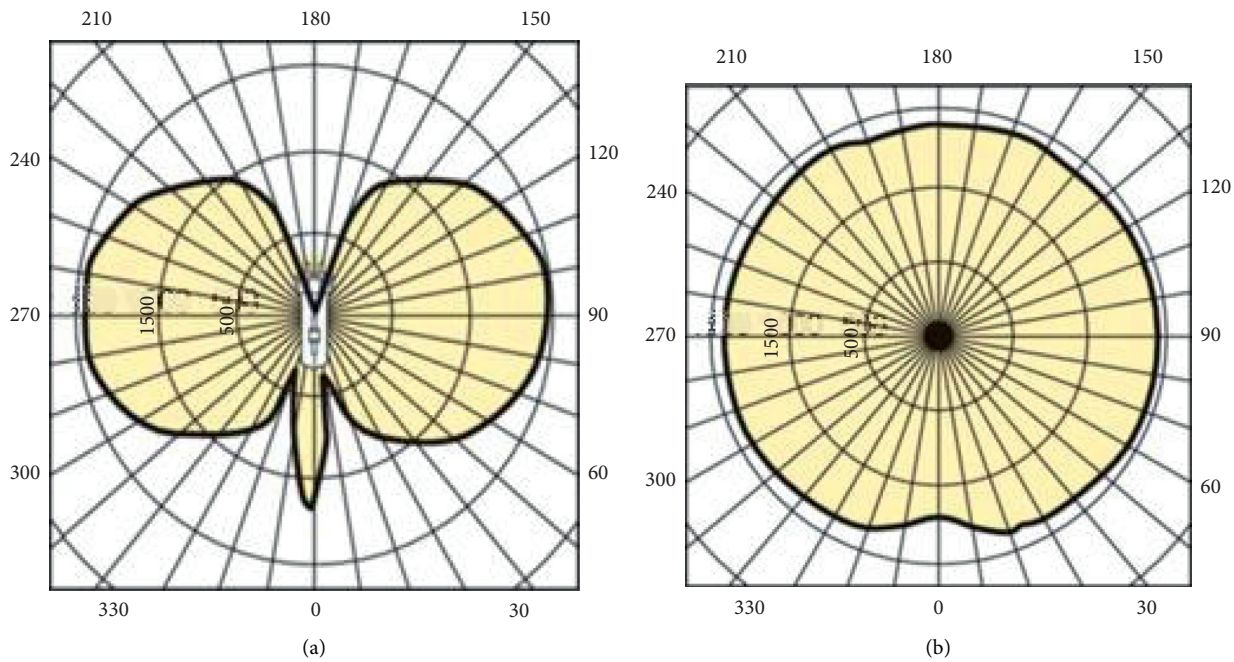

Figure 3: Specified light distribution of the Philips MASTERColour CDM-T Elite 150 W/930 G12 1CT/12 bulb [6].

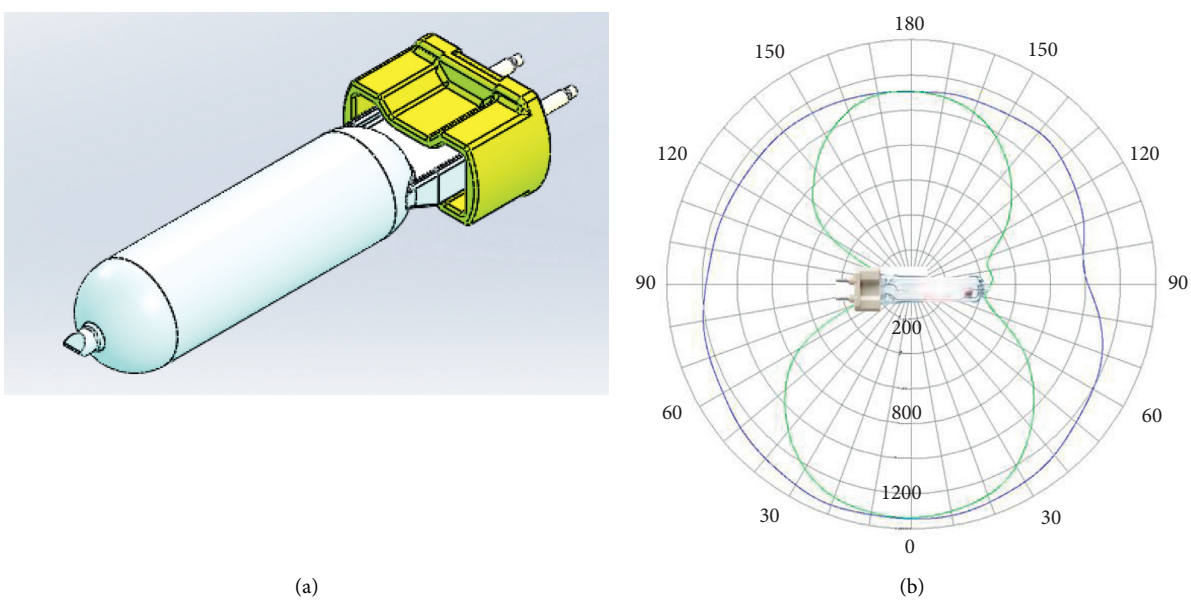

Figure 4: (a) Three-dimensional view of the 150 W Philips MASTERColour bulb. (b) Illuminance distribution from the light source model simulation.

Farlede, France), embedded in SolidWorks, was used to determine the x_i, y_j, and z_j coordinates of the bulb in the luminaire that provide the optimal lighting performance. These coordinates are defined in Figure 8, and the optimization process flowchart is shown in Figure 9. During the optimization process, the optimization object function f was established by a genetic algorithm and is given by [22, 27]

$$f(i,j) = \sum_{i,j=1}^{n} \sqrt{\phi_i (n_i - t_i)^2 + \phi_j (n_j - t_j)^2}, \tag{7}$$

where ϕ_i represents the coordinates of each orientation, n_j is the value of the measured target, determined by an intensity sensor during each optimization pass when running the program; and t_j is the optimization target defined according to the requirements of the CIE M3 class standard, in this

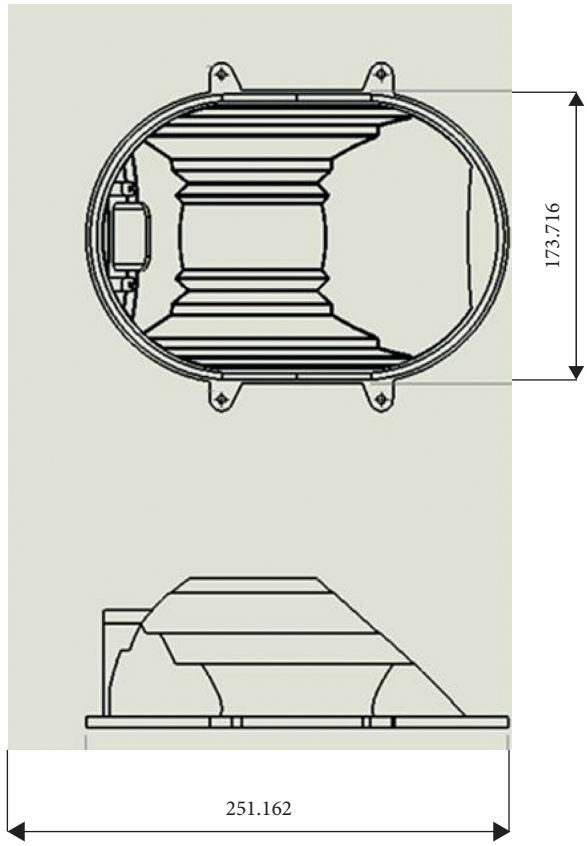

Figure 5: Geometry of proposed freeform-surface street light luminaire.

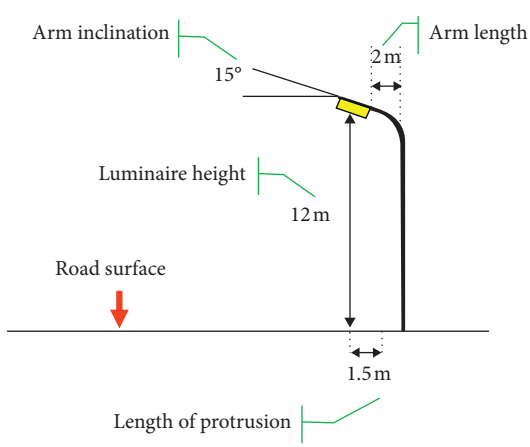

Figure 6: Drawing of lighting environment parameters for design of luminaire of streetlight.

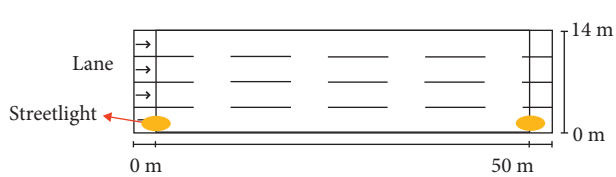

Figure 7: Schematic diagram of the trial road environment.

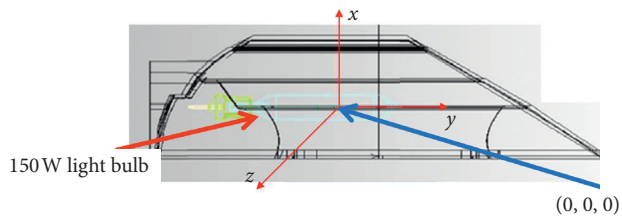

Figure 8: The metal halide light bulb fixed in the freeform-surfaced luminaire. The bulb emitting region was initially placed at the origin (0, 0, 0), set in the center of the reflector.

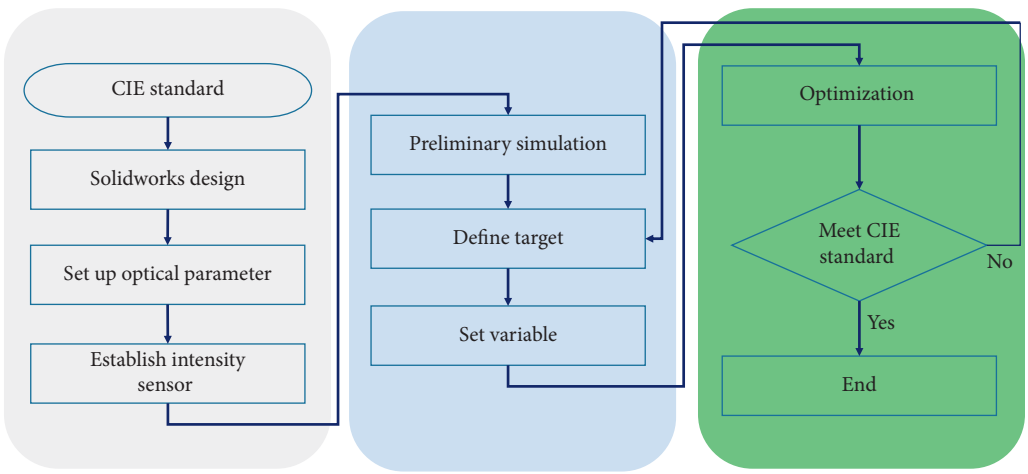

Figure 9: Flowchart of the optimization process for the proposed luminaire.

case, U_o and U_L. The optimal light bulb position coordinates x, y, and z were thus determined by

$$f(U_o, U_L, \mathrm{TI}) = \sum_{i=1}^{i} x_i \cdot \cos^{x_i} + y_i \cdot \cos^{y_i} + z_i \cdot \cos^{z_i}, \quad (8)$$

where i is the step number, and x_i, y_i, and z_i are the function coefficients of each coordinate value. For brevity, these coefficients are written as vectors $x = (x_1, x_2, \ldots, x_i)$, $y = (y_1, y_2, \ldots, y_i)$, and $z = (z_1, z_2, \ldots, z_i)$. The interval range of the target coefficients was set to $U_o = [0.4, 0.6]$, $U_L = [0.6, 0.8]$, and $\mathrm{TI} = [1, 14]$. Discrete optimization algorithms were used on finite subsets in which the possible values were $x_i, y_i, z_i \in \{-5, 0, 5\}$.

The new street light design with the optimal bulb position was accomplished using the OptisWork searching algorithm and was confirmed by TracePro optical software. The LIDCs of the proposed luminaire according to different basic bulb positions and the final LIDC under the optimal bulb position (−0.2, 1.2, 0) are shown in Figure 10. The IES source files associated with these LIDCs were obtained and imported into DIALux to establish the lighting performance simulation according to the road lighting environment settings. The simulation results shown in Table 2 indicate that the optimal bulb position provides improved performance over the basic positions in terms of each evaluation item for the CIE M3 class.

4. Optical Measurements and Analysis

To confirm the simulation results against actual measurements, the proposed streetlight luminaire was prototyped using a high-precision aluminum mold based on a 3D CAD file of the optimized street light and is shown in Figure 11. A Philips MASTERColour CDM-T Elite 150 W/930 G12 1CT/12 metal halide lamp was then fixed in the prototype at the previously obtained optimal position (−0.2, 1.2, 0). An imaging goniophotometer produced by Radiant Imaging Co. Ltd., shown in Figure 12, was then used to obtain the entire light intensity distribution map and LIDC of the prototype, shown in Figure 13. The measured IES light source file for the optimized street light sample was then

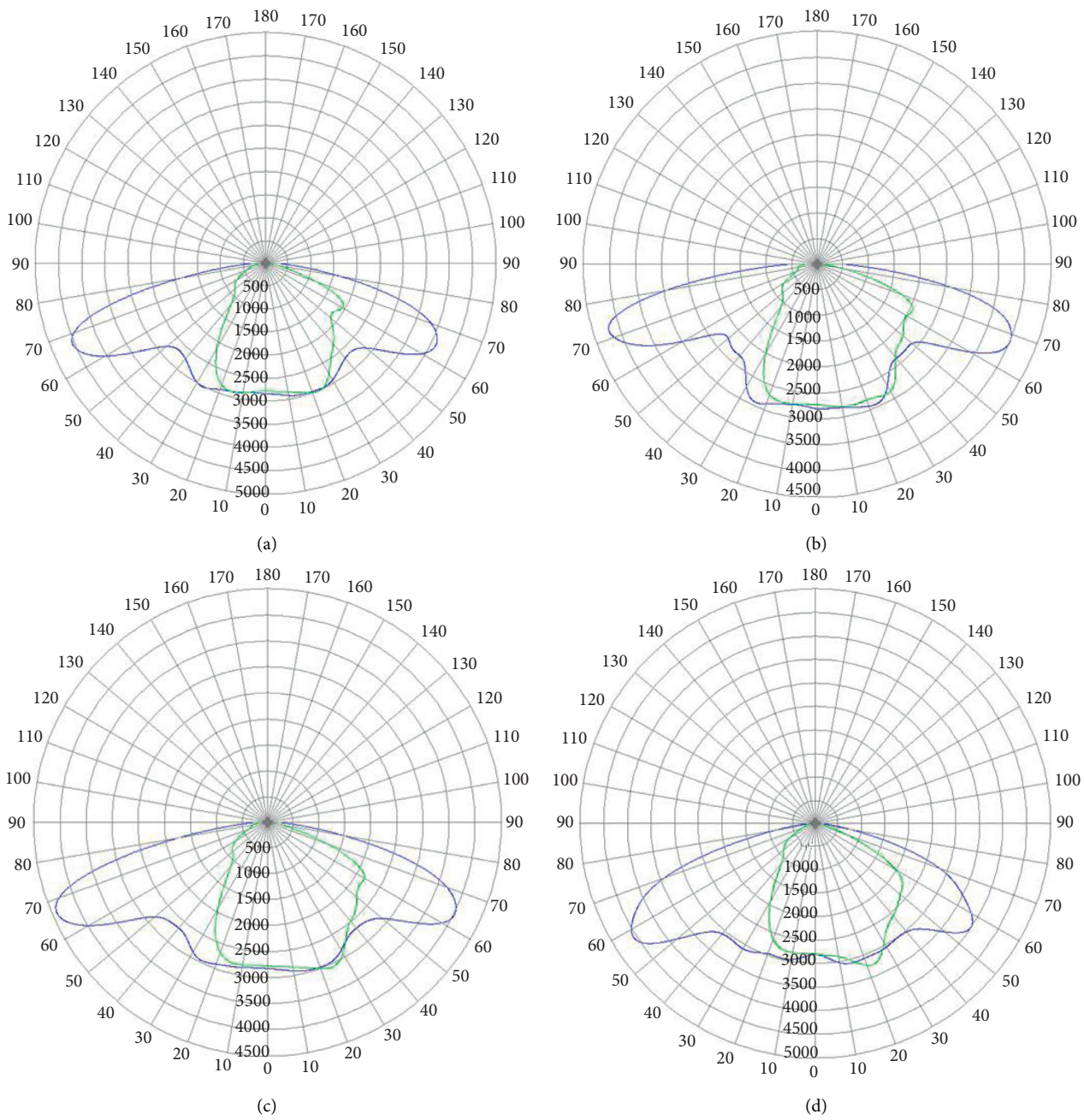

Figure 10: Continued.

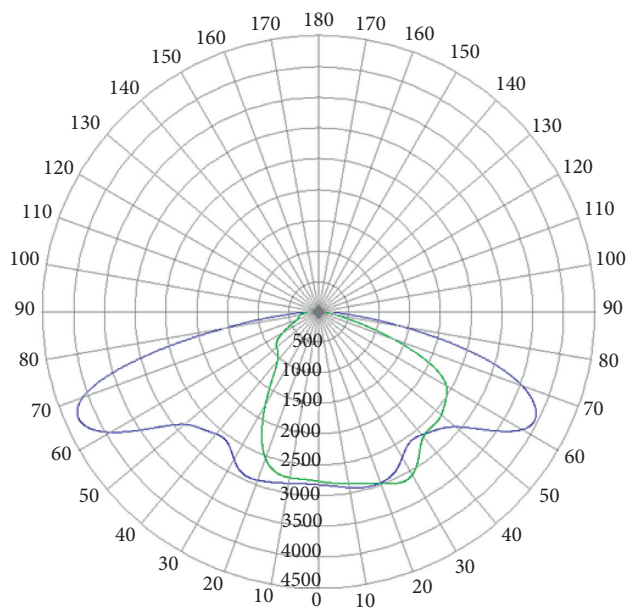

(e)

Figure 10: Simulated light distribution curves with bulb placed (a) 5 mm up (5, 0, 0); (b) 5 mm down (−5, 0, 0); (c) 5 mm left (0, 5, 0); (d) 5 mm right (0, −5, 0); (e) in the optimal position [6].

Table 2: DIALux simulation results of the proposed change in light bulb position in the luminaire with respect to the requirements of the CIE M3 class standard.

Light bulb position	U_o ≥0.4	U_L ≥0.6	TI ≤15
(0, 0, 0)	0.41	0.62	14.5
(−5, 0, 0)	0.37	0.68	22
(0, 5, 0)	0.40	0.76	15
(5, 0, 0)	0.43	0.55	10
(0, −5, 0)	0.41	0.73	13
Optimal position (−0.2, 1.2, 0)	0.47	0.79	9.5

imported into DIALux to confirm whether or not the road lighting performance conformed to the CIE M3 class standard.

The resulting road lighting performance coefficients are detailed in Table 3, which confirms that the proposed luminaire provides trial road lighting that meets the CIE M3 class standard. Based on the simulation results shown in Table 3, the brightness uniformity U_o of Lane 1, Lane 2, and Lane 3 is 0.41 and Lane 2 is 0.42, respectively. The longitudinal brightness uniformity U_l and the glare factor TI are 0.63 and 8% (Lane 1), 0.69 and 9% (Lane 2), 0.61 and 7% (Lane 3), 0.64 and 5% (Lane 4), respectively. On the other hand, the experimental results indicate a controlling L_{avg} of 1.1 cd/m^2, U_o of 0.41 (compared to a minimum requirement of 0.4), U_L of 0.64 (compared to a minimum requirement of 0.6), and TI of 7.6% (compared to a maximum limit of 15%). The prototype street light was also evaluated by the Taiwan Accreditation Foundation (TAF) using a type C mirror goniophotometer in their certification laboratory, with the results shown in Table 4. The data in Table 4 are close to the measurement results obtained by the imaging goniophotometer in Table 3, verifying the accuracy of the optical measurements conducted in our laboratory. A flow chart of the complete optical evaluation of the prototype streetlight is shown in Figure 14.

5. Discussions and Conclusions

In this study, a freeform-surfaced luminaire was proposed that uses a 150 W Philips CDM-T MASTERColour compact metal halide discharge lamp to provide counter beam lights meeting the requirements of the CIE M3 class street lighting

Figure 11: Prototype of proposed street light with freeform-surfaced luminaire.

Figure 12: The street light measurement setup using an imaging goniophotometer.

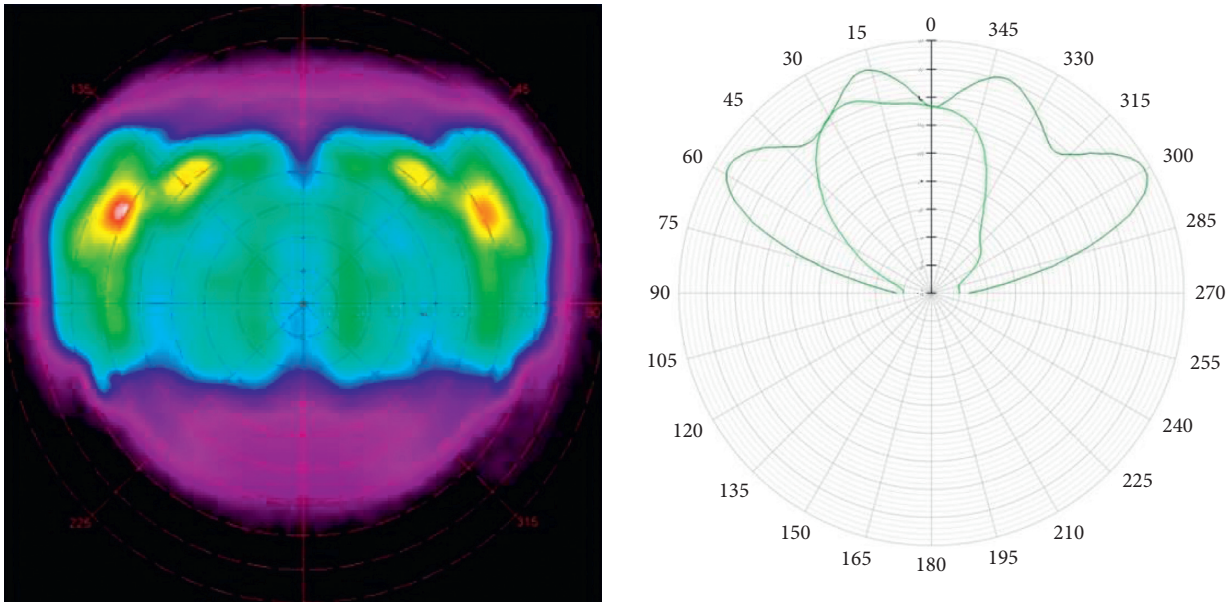

(a) (b)

Figure 13: (a) The measured three-dimensional light intensity distribution map of the proposed street light prototype. (b) The measured LIDC of the proposed street light prototype.

Table 3: DIALux simulation results using the imported measured IES file for the prototype street light obtained by imaging goniophotometer.

	U_o	U_L	TI
For the whole road	0.42	0.63	10
Lane 1	0.42	0.66	9
Lane 2	0.42	0.63	10
Lane 3	0.42	0.69	9
Lane 4	0.44	0.77	7

Table 4: DIALux simulation results using the imported measured IES file for the prototype street light obtained by a TAF certified type C mirror goniophotometer.

	U_o	U_L	TI
For the whole road	0.41	0.61	9
Lane 1	0.41	0.63	8
Lane 2	0.41	0.69	9
Lane 3	0.41	0.61	7
Lane 4	0.42	0.64	5

standard. The optimal design of the street light luminaire was achieved using the TracePro and DAILux optical design software packages. In order to demonstrate the practicality of the design, a physical prototype of the proposed luminaire was evaluated in the laboratory using an imaging goniophotometer. The reliability of these test results was confirmed by a mirror goniophotometer test conducted in a laboratory certified by the TAF. The road condition simulation results obtained using the two measurements show only minor deviations between each other and the optimized design, and thus meet the CIE M3 class street lighting standard. The results indicate that the prototype provides an average road surface brightness L_{avg} of 1.1 cd/m^2, brightness uniformity U_o of 0.42 (compared to a minimum requirement of 0.4), longitudinal brightness uniformity U_L of 0.75 (compared to a minimum requirement of 0.6), and glare factor TI of 9.5% (compared to a maximum limit of 15%). Moreover, the proposed freeform-surface design was found to enhance the output surface brightness by 5% compared to the conventional design. The findings of this study are

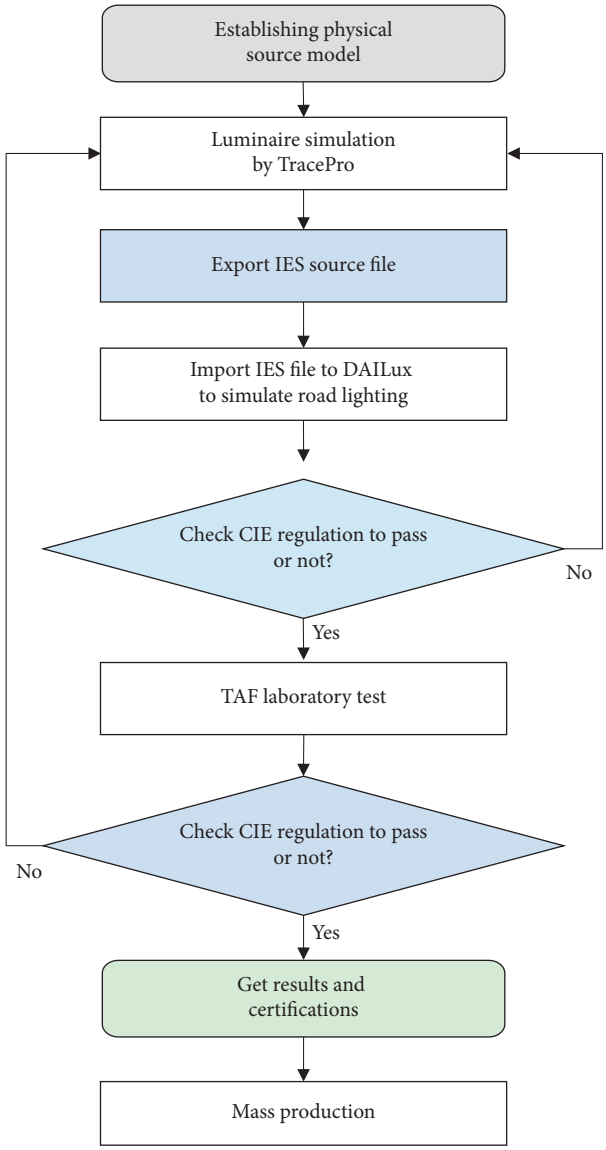

Figure 14: Flow chart of freeform-surface streetlight luminaire evaluation.

expected to aid in the design of street lights to meet the enhanced requirements of the most recent international standards.

Data Availability

No data were used to support this study.

Conflicts of Interest

The authors declare that there are no conflicts of interest regarding the publication of this paper.

Acknowledgments

The authors would like to thank Editage (http://www.editage.com) for English language editing.

References

[1] A. T. Murray and X. Feng, "Public street lighting service standard assessment and achievement," *Socio-Economic Planning Sciences*, vol. 53, pp. 14–22, 2016.

[2] A. T. Ergüzel, "A study on the implementation of dimmable street lighting according to vehicle traffic density," *Optik*, vol. 184, pp. 142–152, 2019.

[3] M. Beccali, M. Bonomolo, V. Lo Brano et al., "Energy saving and user satisfaction for a new advanced public lighting system," *Energy Conversion and Management*, vol. 195, pp. 943–957, 2019.

[4] A. C. Duman and Ö. Güler, "Techno-economic analysis of off-grid photovoltaic LED road lighting systems: a case study for northern, central and southern regions of Turkey," *Building and Environment*, vol. 156, pp. 89–98, 2019.

[5] R. H. Simons and A. R. Bean, *Lighting Engineering: Applied Calculations*, Architectural Press, Oxford, UK, 2008.

[6] Commission Internationale de l'Éclairage (CIE), *CIE 88:2004 Guide for the Lighting of Road Tunnels and Underpasses*, CIE Central Bureau, Vienna, Austria, 2004.

[7] A. Haans and Y. A. W. De Kort, "Light distribution in dynamic street lighting: two experimental studies on its effects on perceived safety, prospect, concealment, and escape," *Journal of Environmental Psychology*, vol. 32, no. 4, pp. 342–352, 2012.

[8] S. Yoomak and A. Ngaopitakkul, "Optimisation of lighting quality and energy efficiency of LED luminaires in roadway lighting systems on different road surfaces," *Sustainable Cities and Society*, vol. 38, pp. 333–347, 2018.

[9] J. Silva, J. F. G. Mendes, and L. T. Silva, "Assessment of energy efficiency in street lighting design," *WIT Transactions on Ecology and the Environment*, vol. 129, pp. 705–715, 2010.

[10] W. Prommee and N. Phuangpornpitak, "Illuminance and luminance for LED street light optic designs: comparison between big lens and small lens," *GMSARN International Journal*, vol. 9, p. 9, 2016.

[11] A. A. Mansour and O. A. Arafa, "Comparative study of 250W high pressure sodium lamp operating from both conventional and electronic ballast," *Journal of Electrical Systems and Information Technology*, vol. 1, no. 3, pp. 234–254, 2014.

[12] D. S. Dorr, A. Mansoor, A. G. Morinec, and J. C. Worley, "Effects of power line voltage variations on different types of 400-W high-pressure sodium ballasts," *IEEE Transactions on Industry Applications*, vol. 33, no. 2, pp. 472–476, 1997.

[13] R. Carli, M. Dotoli, and R. Pellegrino, "A decision-making tool for energy efficiency optimization of street lighting," *Computers & Operations Research*, vol. 96, pp. 223–235, 2018.

[14] R. Carli, M. Dotoli, and E. Cianci, "An optimization tool for energy efficiency of street lighting systems in smart cities," *IFAC-PapersOnLine*, vol. 50, no. 1, pp. 14460–14464, 2017.

[15] F. Marino, F. Leccese, and S. Pizzuti, "Adaptive street lighting predictive control," *Energy Procedia*, vol. 111, pp. 790–799, 2017.

[16] J. A. Lobão, T. Devezas, and J. P. S. Catalão, "Energy efficiency of lighting installations: software application and experimental validation," *Energy Reports*, vol. 1, pp. 110–115, 2015.

[17] C. C. Da Fonseca, R. P. Pantoni, and D. Brandão, "Public street lighting remote operation and supervision system," *Computer Standards & Interfaces*, vol. 38, pp. 25–34, 2015.

[18] N. Nithya and M. Hemalatha, "GSM based cost effective street lighting application," *Procedia Engineering*, vol. 30, pp. 737–741, 2012.

[19] I. Moreno, "Illumination uniformity assessment based on human vision," *Opt. Lett.*vol. 35, no. 23, pp. 4030–4032, 2010.
[20] L. Moretti, G. Cantisani, and P. Di Mascio, "Management of road tunnels: construction, maintenance and lighting costs," *Tunnelling and Underground Space Technology*, vol. 51, pp. 84–89, 2016.
[21] A. Peña-García and A. Sędziwy, "Optimizing lighting of rural roads and protected areas with white light: a compromise among light pollution, energy savings, and visibility," *Leukos*, vol. 16, no. 2, pp. 147–156, 2020.
[22] L.-T. Le, H.-T. Le, J. Lee, H.-Y. Ma, and H.-Y. Lee, "Design of a Society of Automotive Engineers regular curved retroreflector for enhancing optical efficiency and working area," *Crystals*, vol. 8, no. 12, p. 450, 2018.
[23] N. L. Ramli, N. M. Yamin, S. A. Ghani, N. M. Saad, and S. M. Sharif, "Implementation of passive infrared sensor in street lighting automation system," *ARPN Journal of Engineering and Applied Sciences*, vol. 10, pp. 17120–17126, 2015.
[24] L.-T. Le, H.-T. Le, M.-J. Chen et al., "Enhancement of ECE superpin curved reflex reflector by the use of double pins with corner cubes," *Applied Sciences*, vol. 9, no. 8, p. 1555, 2019.
[25] Commission Internationale de l'Éclairage (CIE), *CIE 115:2010 Lighting of Roads for Motor and Pedestrian Traffic*, CIE Central Bureau, Vienna, Austria, 2010.
[26] A. S□dziwy, "Sustainable street lighting design supported by hypergraph-based computational model," *Sustainability*, vol. 8, no. 1, p. 13, 2016.
[27] F. Leccese, G. Salvadori, and M. Rocca, "Critical analysis of the energy performance indicators for road lighting systems in historical towns of central Italy," *Energy*, vol. 138, pp. 616–628, 2017.
[28] A. Gutierrez-Escolar, A. Castillo-Martinez, J. Gomez-Pulido, J.-M. Gutierrez-Martinez, Z. Stapic, and J.-A. Medina-Merodio, "A study to improve the quality of street lighting in Spain," *Energies*, vol. 8, no. 2, pp. 976–994, 2015.
[29] M. Kostic and L. Djokic, "Recommendations for energy efficient and visually acceptable street lighting," *Energy*, vol. 34, pp. 10 1565–1572, 2009.
[30] M. Beccali, M. Bonomolo, F. Leccese, D. Lista, and G. Salvadori, "On the impact of safety requirements, energy prices and investment costs in street lighting refurbishment design," *Energy*, vol. 165, pp. 739–759, 2018.