Hindawi Publishing Corporation
International Journal of Photoenergy
Volume 2011, Article ID 543273, 6 pages
doi:10.1155/2011/543273

Research Article

An AMOLED AC-Biased Pixel Design Compensating the Threshold Voltage and *I*-*R* Drop

Ching-Lin Fan,[1,2] Hui-Lung Lai,[1] and Yan-Wei Liu[1]

[1] *Department of Electronic Engineering, National Taiwan University of Science and Technology, 43 Section 4, Keelung Road, Taipei 106, Taiwan*
[2] *Graduate Institute of Electro-Optical Engineering, National Taiwan University of Science and Technology, 43 Section 4, Keelung Road, Taipei 106, Taiwan*

Correspondence should be addressed to Ching-Lin Fan, clfan@mail.ntust.edu.tw

Received 23 July 2011; Accepted 1 September 2011

Academic Editor: Raghu N. Bhattacharya

We propose a novel pixel design and an AC bias driving method for active-matrix organic light-emitting diode (AM-OLED) displays using low-temperature polycrystalline silicon thin-film transistors (LTPS-TFTs). The proposed threshold voltage and *I*-*R* drop compensation circuit, which comprised three transistors and one capacitor, have been verified to supply uniform output current by simulation work using the Automatic Integrated Circuit Modeling Simulation Program with Integrated Circuit Emphasis (AIM-SPICE) simulator. The simulated results demonstrate excellent properties such as low error rate of OLED anode voltage variation ($< 0.7\%$) and low voltage drop of V_{DD} power line. The proposed pixel circuit effectively enables threshold-voltage-deviation correction of driving TFT and compensates for the voltage drop of V_{DD} power line using AC bias on OLED cathode.

1. Introduction

Active-matrix organic light-emitting diode (AMOLED) displays with polycrystalline silicon (poly-Si) thin-film transistors (TFTs) and amorphous silicon TFTs have been widely researched and developed because of its superior characteristics in flat displays. These advantages include wide viewing angle, high brightness, fast response time, compact, and light weight [1, 2]. Low-temperature polycrystalline silicon thin-film transistors (LTPS-TFTs) are widely utilized in active-matrix organic light-emitting diode (AMOLED) displays, as they have higher current driving capability than that of amorphous Si TFTs. Though LTPS-TFTs have good electrical characteristics, the nonuniformity problem due to process variation is inevitable and results in differences in the OLED current among pixels. However, it is difficult to implement an AMOLED panel with good image quality because of variations in the threshold voltage and in the mobility of poly-Si TFTs among pixels [3]. In the case of conventional two-TFTs driving AMOLED, the variant performance of the poly-Si TFT causes nonuniform gray scale over the display area. As a result, several compensation methods have been developed which can be classified into voltage programming [4, 5], current programming [6], circuit compensation [7], and AC driving compensation method [8, 9]. Among all the compensation methods, the driving scheme is an important factor in improving the performances of OLED [10]. Even though the current programming methods can compensate both mobility and threshold voltage deviation, they need long settling time for low data current at a high parasitic capacitance of the data line. This is the critical disadvantage for large panels with high-resolution. Therefore, in order to overcome this problem, voltage driving method is better than current driving method for the large size and high resolution display [11–13]. However, many schemes have been reported to compensate the threshold voltage variation of driving TFT, but they do not optimize efficiency both the number of TFTs and the error rate of OLED anode voltage for compensation of OLED degradation [4, 5].

In this paper, a new AC-biased voltage programming AMOLED pixel circuit is proposed with the aim of producing displays with uniform brightness. The proposed pixel

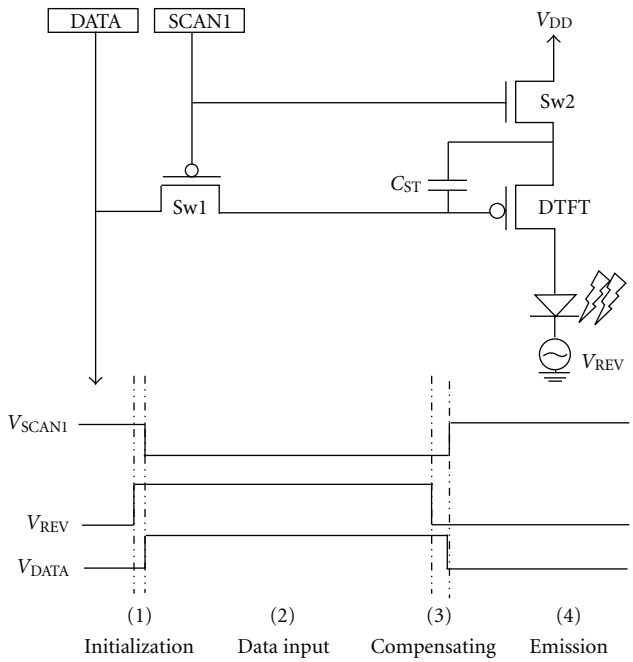

Figure 1: New pixel design circuit and its timing diagram.

design, including three TFTs and one capacitor (3T1C), can compensate the threshold voltage deviation of driving TFTs and *I-R* drop of V_{DD} power line. The simulation results demonstrate that the pixel design effectively improves the OLED current uniformity for AMOLED. This novel pixel design has great potential for enhancing both the brightness uniformity and the high aperture ratio by the 3T1C AC driving pixel circuit.

2. Proposed Pixel Circuit and Driving Method

Figure 1 shows the proposed pixel circuit including driving scheme. In the pixel design, it consists of one p-type switching TFT (Sw1), one n-type switching TFT (Sw2), one p-type driving TFT (DTFT), one capacitor (C_{ST}), and one OLED which is biased by AC voltage at the cathode. The design parameters of proposed pixel circuit are listed in Table 1. Figure 2 shows the equivalent circuit in each state of operation for the compensation mechanism. The circuit operates in four stages: initialization, data input, compensation, and emission and, will be described as follows.

(1) Initialization: the purpose of initial period is to reset the stored voltage at the capacitor (V_{CST}). V_{SCAN1} is high, so Sw1 is turned off, and Sw2 is turned on. Meanwhile, the reverse bias is high voltage. This stage can be free of the influence of previous operations.

(2) Data input period: in this stage, we can use bootstrapping to increase the source node voltage of DTFT. V_{SCAN1} becomes low, so Sw1 becomes turned on, and Sw2 becomes turned off. Meanwhile, the reverse bias remains high voltage. The capacitor C_{ST} is connected from the source of DTFT to the data input. Due to the charge storage characteristics of the capacitor, the source node voltage of DTFT becomes $V_{DATA} + V_{CST}$. V_{CST} is the stored voltage at the capacitor in the initialization period.

Table 1: Simulation parameters for proposed pixel circuit design.

Devices			
W/L (M1)	4/4 μm	VTH (DTFT)	−1 V
W/L (DTFT)	12/4 μm	VTH (OLED)	1 V
W/L (M2)	6/4 μm	C1	0.3 Pf
μ_{FET}		54.3 cm^2/VS	
Signal line			
Scan line 1		−6 ~ 10 V	
V_{DATA}		−2 ~ 7 V	
V_{REV}		0 ~ 12 V	
V_{DD}		8 V	

(3) Compensation period: during this period, the reverse bias becomes low voltage. Therefore, the source current of DTFT passes through the OLED until the source voltage of DTFT is discharged to $|V_{TH}| + V_{DATA}/N$ and the DTFT is turned off. Thus, the capacitor will store $|V_{TH}| + (1-N)/N * V_{DATA}$, where V_{TH} is the threshold voltage of DTFT and N is related to design parameters between C_{ST} and C_{OLED}.

(4) Emission period: in the final period, V_{SCAN1} becomes high, so Sw1 is turned off and Sw2 is turned on. Therefore, the source voltage of DTFT becomes V_{DD} and the gate voltage of DTFT becomes $V_{DD} - V_{CST}$. The OLED current I_{OLED} is also the saturation current of DTFT and becomes,

$$\begin{aligned} I_{OLED} &= \frac{1}{2}K_{DTFT}[V_{SG\_DTFT} - |V_{TH}|]^2 \\ &= \frac{1}{2}K_{DTFT}[V_{DD} - (V_{DD} - V_{CST}) - |V_{TH}|]^2 \\ &= \frac{1}{2}K_{DTFT}\left[|V_{TH}| + \frac{(1-N)}{N} * V_{DATA} - |V_{TH}|\right]^2 \\ &= \frac{1}{2}K_{DTFT}\left[\frac{(1-N)}{N} * V_{DATA}\right]^2 \\ &= \frac{1}{2}K_{DTFT}[-V_{DATA}]^2 \quad \text{if } N \gg 1. \end{aligned} \tag{1}$$

Thus, I_{OLED} is independent of both the threshold voltage of driving TFT and the *I-R* drop at V_{DD} power line. So the proposed pixel circuit can compensate the items at the same time.

3. Simulation Result of Proposed Circuit

Figure 3 shows the good fitting results of the measurement and simulation of LTPS TFT. Electrical characteristics were measured from HP4156C measurement system. The OLED was modeled by a diode-connected poly-Si TFT and a capacitor. The OLED pixel size was 19200 μm^2, and the OLED capacitance is set to 25 nF/cm^2 in the simulation. The design parameters are listed in Table 1.

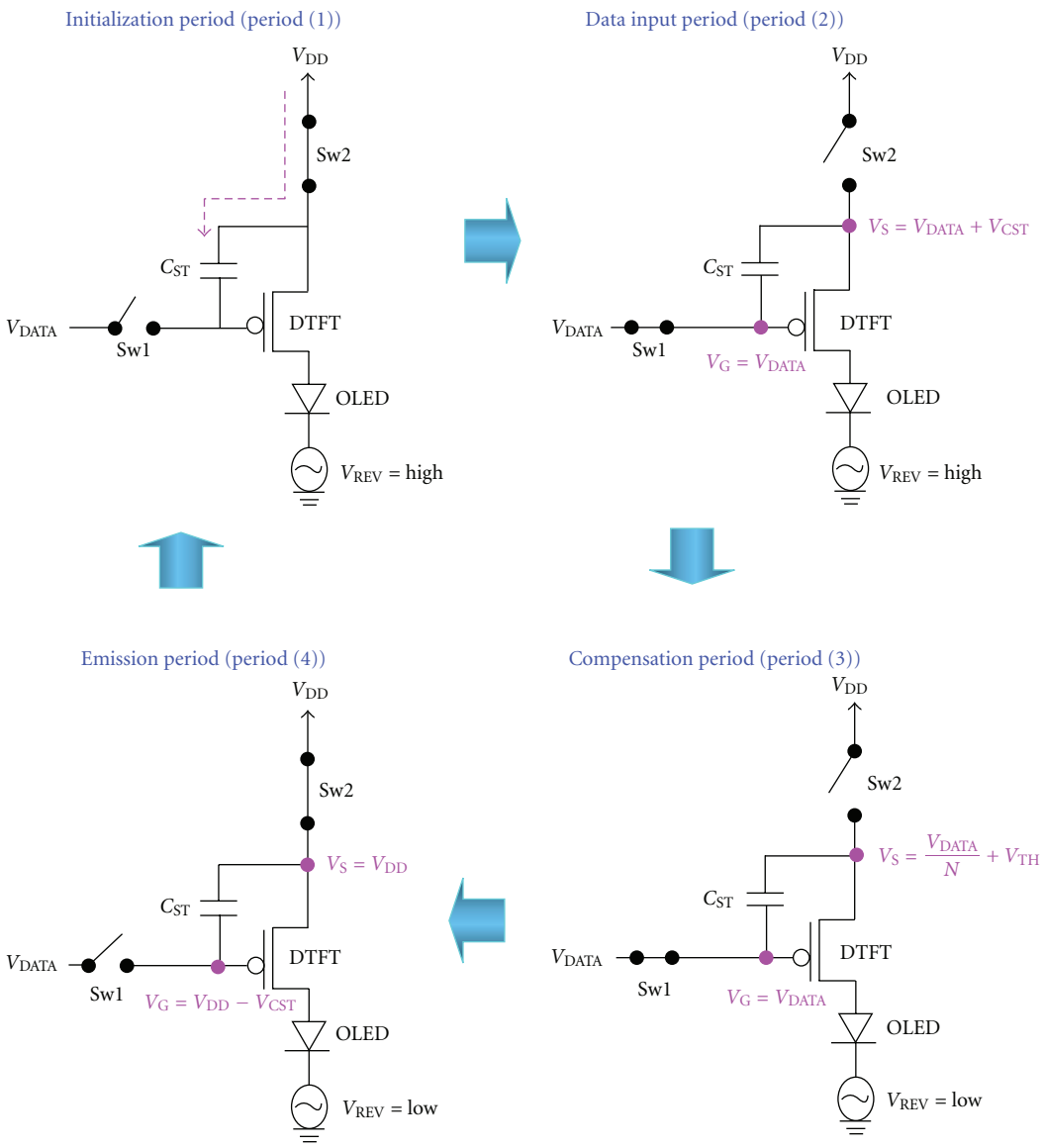

Figure 2: Equivalent circuit in each state of operation.

Figure 4 shows the layout of the proposed pixel circuit. The proposed circuit is fabricated utilizing 3.8 inch QVGA (320 × 240) panel, and the aperture ratio of the pixel circuit is about 43%.

Figure 5 shows each node's voltage of DTFT when the data voltage is 5 V. At the end of compensating period, the capacitor is discharged to $|V_{TH}| + (1 - N)/N * V_{DATA}$, where V_{TH} is the threshold voltage of DTFT. The simulation result verifies the circuit operation as we expected. During the emission period, the gate voltage of DTFT becomes $V_{DD} - V_{CST}$. Thus, V_{CST} is $|V_{TH}| + (1 - N)/N * V_{DATA}$, so the V_{GS} of DTFT is V_{CST} which is $|V_{TH}| + (1 - N)/N * V_{DATA}$, where N is related to design parameters. So the proposed 3T1C pixel circuit can efficiently compensate the deviation of DTFT and I-R drop of V_{DD} power line by the formula.

Figure 6 shows the voltage of the signal lines in the proposed circuit, including Scan1 voltage, data line voltage, the reverse-bias voltage, and the anode voltage of OLED. The simulation shows the OLED's anode voltage variations caused by the threshold voltage deviation of DTFT. The threshold voltage deviation of DTFT is assumed at ±0.33 V when V_{DATA} is 1 V. It is observed that the variation of the OLED anode voltages are very small when the threshold voltage deviation of DTFT is ±0.3 V. The insert figure in Figure 6 clearly shows that the error rate of OLED anode voltage variation is below 0.7% the result can prove that the proposed pixel circuit has high immunity to the threshold voltage deviation of driving TFT. The anode voltages of OLED will affect the OLED driving current and thus represents the display brightness. As a result, the pixel circuit

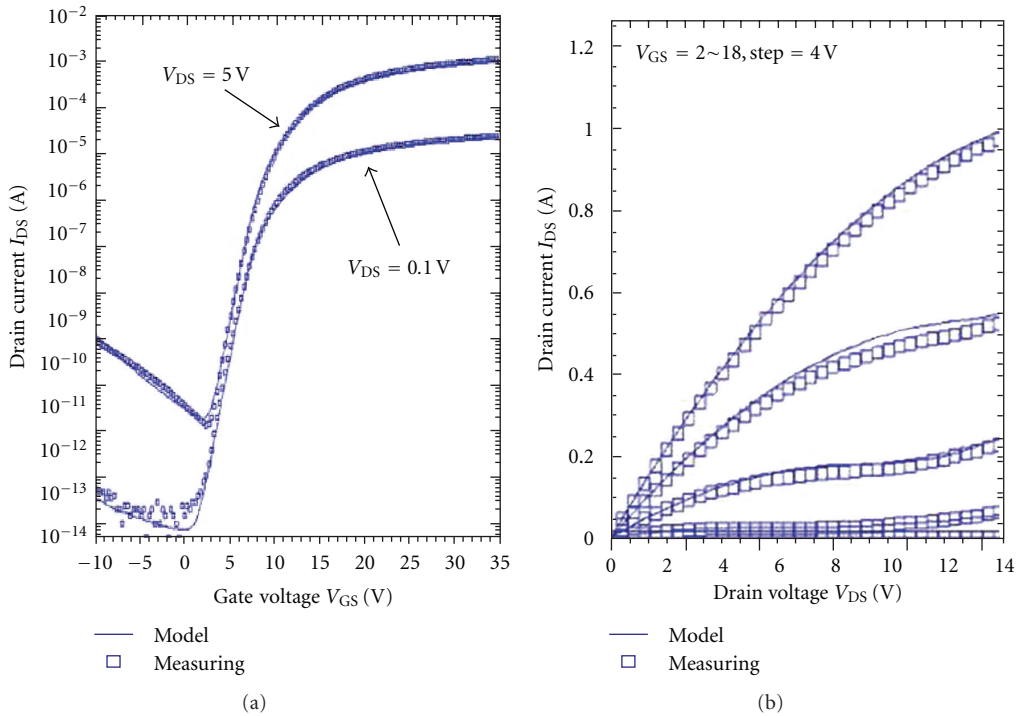

Figure 3: The I-V characteristics of LPTS TFT: (a) transfer curve (b) output curve.

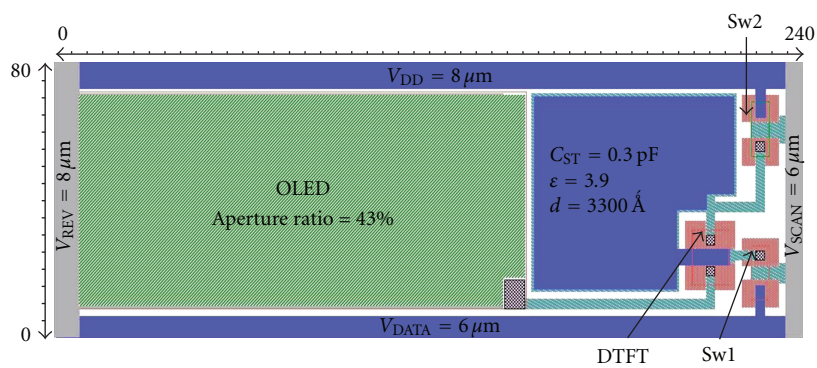

Figure 4: The layout of the proposed pixel circuit.

is capable of providing a uniform OLED driving current regardless of the variation in the poly-Si TFT performance

$$\text{Error rate of OLED Anode Voltage} = \left[\frac{|V_{\text{OLED}}(\Delta V_{\text{TH}} = \pm 0.3\,\text{V}) - V_{\text{OLED}}(\Delta V_{\text{TH}} = 0\,\text{V})|}{V_{\text{OLED}}(\Delta V_{\text{TH}} = 0\,\text{V})}\right] * 100\%. \quad (2)$$

Figure 7 exhibits the OLED current as a function of V_{DATA} under the threshold voltage deviation ($\Delta V_{\text{TH}} = \pm 0.33\text{V}$). The current of OLED is also nearly independent of the variation of the threshold voltage of DTFT, while the average error rate of current is less than 6%.

Figure 8 shows the error rate of OLED current of the proposed 3T1C pixel circuit under the I-R drop of V_{DD} power line comparison with conventional 2T1C pixel circuit when V_{DATA} is 2 V. Error rate is defined as the difference between the OLED current (PV_{DD} degradation) and the original OLED current ($PV_{\text{DD}} = 9\,\text{V}$), divided by the original OLED current ($PV_{\text{DD}} = 9\,\text{V}$) for an input voltage. Compared with the conventional 2T1C pixel circuit, the proposed pixel circuit can offer a stable driving current against the drop of PV_{DD}. The error rate of the conventional 2T1C pixel circuit is increased to 70% for different PV_{DD}, and the error rate of the proposed pixel circuit is significantly reduced (<15%); so the proposed pixel circuit has high immunity to the I-R drop of V_{DD} power line. Thus, the proposed 3T1C pixel circuit can successfully compensate

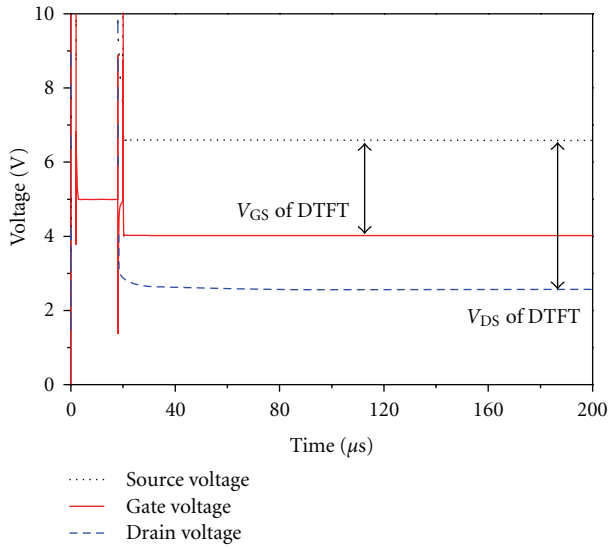

Figure 5: Gate, source, and drain voltage of driving TFT (DTFT) with operation stages when $V_{DATA} = 5$ V.

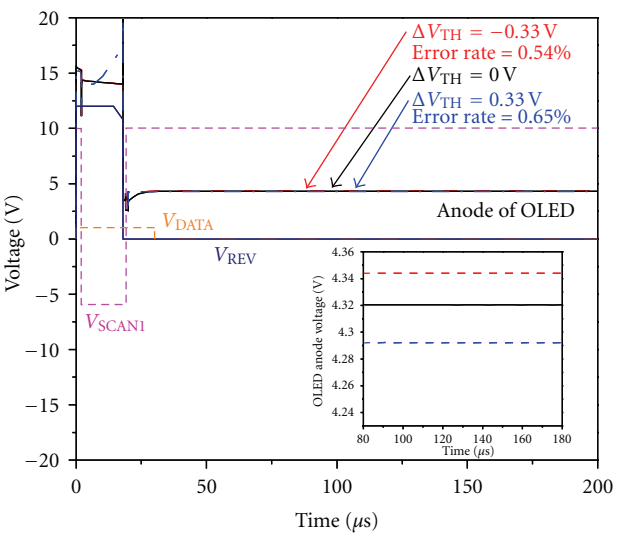

Figure 6: Signal lines (Scan1, reverse bias, and V_{DATA}) of proposed pixel circuit at $V_{DATA} = 1$ V and the anode voltage of OLED with varied threshold voltage of DTFT ($\Delta V_{TH} = -0.33$ V, 0 V, and +0.33 V), the insert figure clearly shows of OLED anode voltage under threshold voltage variation of DTFT, and the error rate of OLED is below 0.7%.

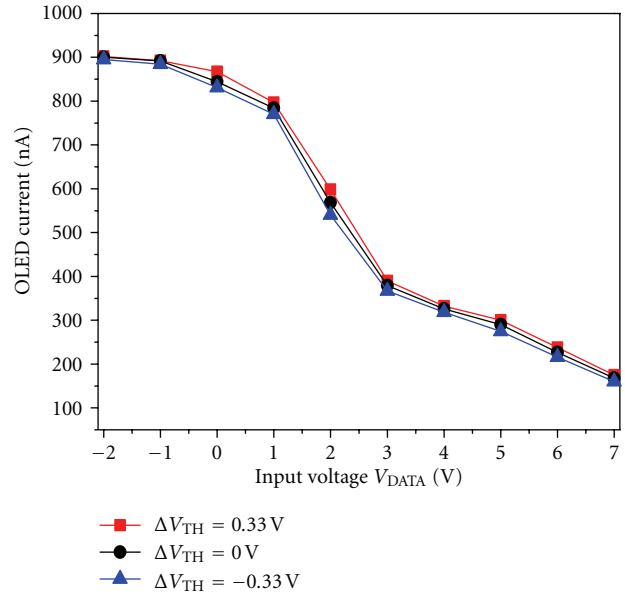

Figure 7: OLED current as a function of V_{DATA} owing to the variation with the threshold voltage of DTFT for 3T1C AC driving pixel circuit.

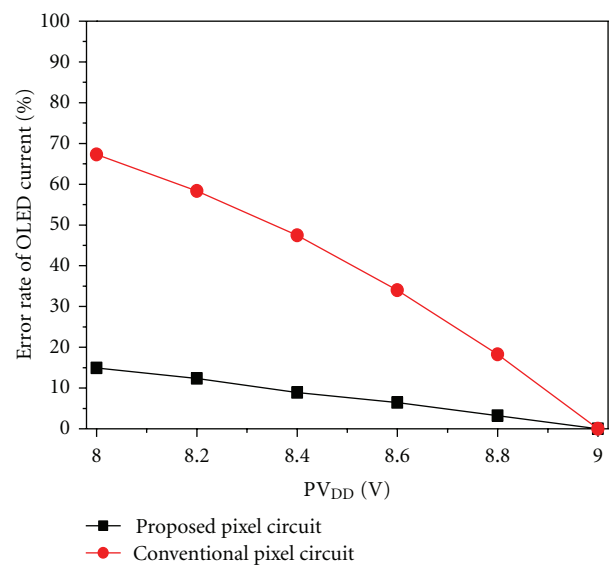

Figure 8: Comparison of current variation versus PV_{DD} drop for the conventional 2T1C pixel circuit and the proposed pixel circuit.

the threshold voltage deviation of driving TFTs and the I-R drop of V_{DD} power line at the same time.

4. Conclusion

This study presents a novel AC voltage programming pixel circuit for AMOLED displays, and is verified with SPICE simulator. The measurement and simulation of LTPS TFT characteristics demonstrate the good fitting result. The proposed circuit is composed of three TFTs and one capacitor and can successfully compensate for the threshold voltage deviation of DTFT and the I-R drop at V_{DD} power line. The simulation results demonstrate that the proposed circuit has high immunity to the threshold voltage deviation of poly-Si TFT characteristics and V_{DD} drop, hence achieving the image uniformity of OLED.

Acknowledgments

The authors would like to acknowledge the financial support from the National Science Council (NSC) under Contract nos. NSC 98-2221-E-011-141, NSC 99-2221-E011-137 and

Active-Matrix and Full-Color Department, RiTdisplay Corporation, Taiwan.

References

[1] M. Kimura, I. Yudasaka, S. Kanbe et al., "Low-temperature polysilicon thin-film transistor driving with integrated driver for high-resolution light emitting polymer display," *IEEE Transactions on Electron Devices*, vol. 46, no. 12, pp. 2282–2288, 1999.

[2] B. T. Chen, Y. J. Kuo, C. C. Pai, C. C. Tsai, H. C. Cheng, and Y. H. Tai, "A new pixel circuit for driving organic light emitting diodes with low temperature polycrystalline thin film transistors," in *Proceedings of the International Display Manufacturing Conference and Exhibition (IDMC '05)*, pp. 378–381, February 2005.

[3] V. W. C. Chan, P. C. H. Chan, and C. Yin, "The effects of grain boundaries in the electrical characteristics of large grain polycrystalline thin-film transistors," *IEEE Transactions on Electron Devices*, vol. 49, no. 8, pp. 1384–1391, 2002.

[4] J. H. Lee, B. H. You, W. J. Nam, and H. J. Lee, "A new a-Si: H TFT pixel design compensating threshold voltage degradation of TFT and OLED," *Symposium Digest of Technical Papers*, vol. 35, no. 1, pp. 264–267, 2004.

[5] S. M. Choi, O. K. Kwon, and H. K. Chung, "An Improved Voltage Programmed Pixel Structure for Large Size and High Resolution AM-OLED Displays," *Symposium Digest of Technical Papers*, vol. 35, no. 1, pp. 260–263, 2004.

[6] Y. He, R. Hattori, and J. Kanicki, "Four-thin film transistor pixel electrode circuits for active-matrix organic light-emitting displays," *Japanese Journal of Applied Physics*, vol. 40, no. 3, pp. 1199–1208, 2001.

[7] S. J. Ashtiani, G. Reza Chaji, and A. Nathan, "AMOLED pixel circuit with electronic compensation of luminance degradation," *IEEE/OSA Journal of Display Technology*, vol. 3, no. 1, pp. 36–38, 2007.

[8] Y. C. Lin and H. P. D. Shieh, "Improvement of brightness uniformity by AC driving scheme for AMOLED display," *IEEE Electron Device Letters*, vol. 25, no. 11, pp. 728–730, 2004.

[9] F. Raissi, "A possible explanation for high quantum efficiency of PtSi/Porous Si schottky detectors," *IEEE Transactions on Electron Devices*, vol. 50, no. 4, pp. 1134–1137, 2003.

[10] D. Zou, M. Yahiro, and T. Tsutsui, "Improvement of current-voltage characteristics in organic light emitting diodes by application of reversed-bias voltage," *Japanese Journal of Applied Physics*, vol. 37, no. 11, pp. L1406–L1408, 1998.

[11] K. Park, J. H. Jeon, Y. Kim et al., "A poly-Si AMOLED display with high uniformity," *Solid-State Electronics*, vol. 52, no. 11, pp. 1691–1693, 2008.

[12] H. Y. Lu, P. T. Liu, T. C. Chang, and S. Chi, "Enhancement of brightness uniformity by a new voltage-modulated pixel design for AMOLED displays," *IEEE Electron Device Letters*, vol. 27, no. 9, pp. 743–745, 2006.

[13] C. L. Lin, T. T. Tsai, and Y. C. Chen, "A novel voltage-feedback pixel circuit for AMOLED displays," *IEEE/OSA Journal of Display Technology*, vol. 4, no. 1, Article ID 4356475, pp. 54–60, 2008.