Hindawi
Journal of Advanced Transportation
Volume 2018, Article ID 1768536, 14 pages
https://doi.org/10.1155/2018/1768536

Research Article

A Simheuristic Method for the Reversible Lanes Allocation and Scheduling Problem at Smart Container Terminal Gate

Wenyuan Wang,[1,2] **Ying Jiang**,[2] **Yun Peng**,[1] **Yong Zhou**,[3] **and Qi Tian**[1]

[1] *State Key Laboratory of Coastal and Offshore Engineering, Dalian University of Technology, Dalian 116024, China*
[2] *Mobilities and Urban Policy Lab, Graduate School for International Development and Cooperation, Hiroshima University, Hiroshima, Japan*
[3] *College of Transport & Communications, Shanghai Maritime University, Shanghai 201306, China*

Correspondence should be addressed to Yun Peng; yun_peng@yahoo.com

Received 7 September 2017; Revised 9 January 2018; Accepted 16 January 2018; Published 12 February 2018

Academic Editor: Ludovic Leclercq

Under the constraints of limited spaces and imbalanced traffic volumes (for both in and out directions) of container gates, reversible lane layouts become an economical and practical way to improve the service level of container terminal systems and make the maximum use of the current terminal resources. Together with a consideration of minimized total costs (both construction and operating) of terminal gate system, this paper first developed an optimization model to decide the number and scheduling rules of the reversible lanes at a terminal gate. A metaheuristic algorithm was built to solve the optimal model. Meanwhile, to reflect the randomness and dynamics property of the terminal gate system in practice, parameters that cannot be calculated from conventional analytic methods are obtained through a simulation model. Finally, a hub container terminal in the northeast of China was employed to verify the effectiveness of the proposed method and provide a theoretical foundation for the construction and management of terminal gate systems.

1. Introduction

With the continuous increase of containers' throughput, terminal gates have become the bottleneck of restricting the development of container terminals. Container trucks frequently queue up and wait for service out of the terminal gates. Poor performance of the terminal gate will not only restrict the logistics efficiency of whole terminal system but also cause serious air pollution problems due to the long waiting time at gates. Thus, it is urgent and important to improve the service level of the congested terminal gate. Generally, congestion issues at container terminal gates can be alleviated by increasing the number of service lanes. However, due to the restrictions of available space and huge construction cost, it is impractical to expand the gates for all container terminals. Then, smart transformation of existing terminal gates from the perspective of operational management has become a more practical and economical way to solve the current problems. Therefore, it naturally raises a question: how should the service lanes at smart container terminal gate be allocated and scheduled so that the total costs of construction and operation of the gate system are minimized?

In order to solve the congestion problem at container terminal gates, efforts that have been made mainly focus on two aspects: container trucks' management and terminal gates' operation. Then, for the management of container trucks, Namboothiri and Erera [1] studied the management of a fleet of trucks providing container pickup and delivery service (drayage) to a terminal with an appointment-based access control system; Chen et al. [2] proposed an analytical point-wise stationary approximation model to analyze time-dependent truck queuing processes with stochastic service time distributions at gates and yards of a terminal; Chen et al. [3] proposed a method called vessel-dependent time windows to control truck arrivals, involving partitioning truck entries into groups and assigning different time windows to the groups. Later, Chen et al. [4] developed a biobjective

model to minimize both truck waiting times and truck arrival pattern change, so that the emissions from idling truck engines at marine container terminals can be reduced; Yang et al. [5] presented an integrated planning model and a sequential planning model to coordinate the major terminal planning activities and developed a heuristic-based genetic algorithm to solve the models; Phan and Kim [6] addressed a negotiation process for smoothing truck arrivals in peak hours among multiple trucking companies and a terminal; Azab and Eltawil [7] developed a discrete event simulation model to study the effect of various truck arrival patterns on length of stay of trucks in container terminals; Ambrosino and Peirano [8] solved a mixed integer linear programming model based on the network flow theory to determine the number of appointments offered by each time window to trucks in the shortest time as possible; Chen and Jiang [9] proposed a solution of managing truck arrivals with time windows based on the truck-vessel service relationship, where trucks delivering containers for the same vessel share one common time window.

On the other hand, from the perspective of terminal gate operation and management, Guan and Liu [10] applied a multiserver queuing model to analyze marine terminal gate congestion and quantify truck waiting time cost in a case study of the port of New York/New Jersey. Focusing on the business bottlenecks of terminal operations, Hu et al. [11] tried to improve operation efficiency from the perspectives of orderly balance and seamless connection in different operational processes at the entrance gate of container terminals; Tsai et al. [12] proposed an image-processing algorithm to automatically extract truck processing time data (by using the low-frame-rate images); then experimental tests were employed to demonstrate the robustness of the proposed algorithm for dealing with the unique technical challenges at a terminal gate; Fleming et al. [13] used agent-based simulation to model the terminal gate system with two queuing strategies, that is, pooled queue and nonpooled queues, to evaluate the performance of pooling trucks into a single queue at a gate; Ambrosino and Caballini [14] addressed the minimization of truck service times at container terminals while respecting a certain level of congestion; Kadir et al. [15] presented an application of Radio Frequency Identification technology, and e-seal in a terminal gate was used to reduce the processing clearance time.

Several studies have also been conducted by emphasizing on the gate scale optimizing from the perspective of terminal planning. For example, Chu (2014) developed a planning-level tool to assess the effectiveness of gate layouts and determine the optimal layout for marine container terminals. The tool can also be used to determine the average truck queuing time for a given gate configuration and to determine how many service gates and queuing lanes are needed to achieve a desired level of service for a given truck arrival rate and truck service rate. Zeng et al. [16] conducted a study by focusing on the queue length and average waiting time of the railway container terminal gate system and the optimal number of service lanes during different time period. Keceli [17] simulated a multipurpose terminal to estimate the gate traffic and determine the necessary gate infrastructure.

In summary, existing literatures are mainly focusing on the layout design and scale optimization of a container terminal gate. Dealing with the congestion problem at container terminal gates, countermeasures usually come from two aspects: (1) Expand the scale of container terminal gates and increase the number of lanes. This method can alleviate the congestion at terminal gates directly and decrease waiting times and fuel costs for container trucks as well. However, it only works under the condition of enough space being available nearby the terminal gate. Besides, the cost on new construction and operation will significantly increase. (2) Adopt effective scheduling methods, for example, ordering arrival and departure time for container trucks, extending operating time for terminal gates, and changing queuing discipline for container trucks, as well as setting reversible lanes (RLs). Then, compared with other scheduling methods, setting RLs had less influences on works of container truck management by transport enterprises and manual operation at container terminals. Although the RL needs higher construction and operation costs than the fixed lane (FL), setting a certain number of RLs with reasonable scheduling rules without increasing the total lane numbers can effectively alleviate the congestion at container terminal gates. Moreover, the imbalanced queuing issue of FLs in arrival and departure directions could also be solved and will further contribute to the reduction of variable cost to container trucks (waiting time and fuel consumption). To the best of the authors' knowledge, this is the first study to explore the dynamic container terminal gate management based on a reversible lane (RL) idea.

The concept of RL is generally used in urban traffic design, tunnels, and bridges [18]. Depending on certain conditions, the traffic in RLs may travel by either direction. Traffic capacity of the corresponding direction could be amplified temporally. For example (Figure 1), in the real container terminal, lanes 1, 2, 3, 4, 5, 6, and 7 are used for entering port, while lanes 7, 8, 9, and 10 are set for leaving port; that is, lane 7 is a RL. Then, by adopting RLs concept, a new terminal gate management method was established with consideration of unbalanced traffic volumes of arriving and departure from a container. It is expected that setting of RLs at a container terminal gate could significantly contribute to the improvement of the terminal gate management system.

In order to further investigate the necessity of RLs setting at a container terminal gate, the corresponding optimal number, and scheduling rule of RLs, a series of scheduling rules of RLs under the special concept of terminal gates are proposed in this study. Then, aiming at minimizing the total costs of the container terminal gate system, which include construction and operating costs, an optimization model of the container terminal gate system was established. Additionally, a metaheuristic algorithm was proposed to solve the model and find the optimal number of the container lanes under the condition of fixed scale gates. Finally, the necessity of setting RLs can be verified through comparison of the total cost between two different terminal gate systems, regardless of whether RLs were equipped or not.

The rest of this paper is organized as follows. Section 2 introduces methods to alleviate congestions at a container

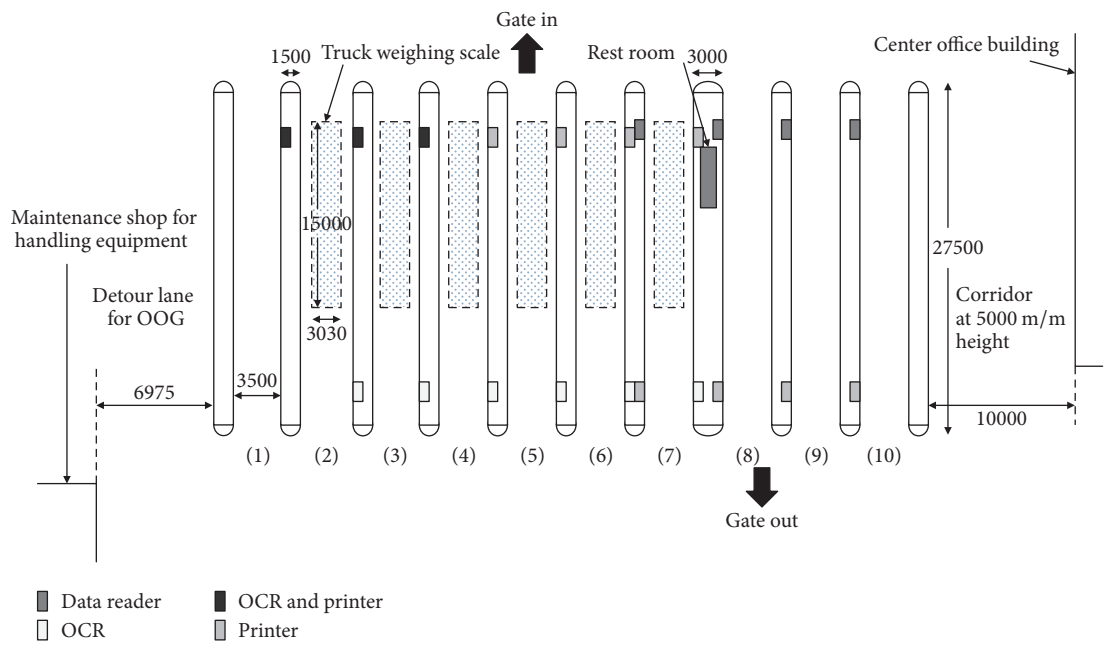

Figure 1: Lanes setting and scheduling for gate in a real container terminal.

terminal gate, select imbalanced queuing coefficients, and set scheduling rule of RLs. Section 3 establishes an optimization model of the container terminal gate system to seek the best number of RLs and scheduling rules. Since some parameters in the optimization model cannot be quantified through classical numerical methods, in Section 4, a simulation model is built to determine those parameters. Based on results of the simulation model, a simulated annealing (SA) metaheuristic algorithm is proposed to solve the optimization model. Section 5 introduces the case study and sensitivity analysis is carried out, followed by conclusions and future discussions in Section 6.

2. Problem Description

To alleviate congestions and minimize total costs of the container terminal gate system, the objective of this study is to figure out how to determine the optimal number of RLs and develop reasonable scheduling rules for RLs from the perspectives of both planning and management level. To further explain the operating principles of RLs at a container terminal gate, in Section 2.1, the conception of "imbalanced queuing coefficients" is firstly introduced to figure out conditions when RLs should change their traffic direction. Then, detailed discussion of scheduling rules of RLs is given in Section 2.2.

2.1. Imbalanced Queuing Coefficients. Direction variation of RLs depends on the queuing condition of a container terminal gate. Concretely speaking, if the queue length in direction of the RL is much shorter than that of the opposite direction, the traffic direction of RLs should be changed. In this way, the number of lanes in arrival and departure directions can be dynamically adjusted. Therefore, the thorough capacity of the container terminal gate in two directions can be well balanced. And the congestion problem caused by imbalanced serving number of container trucks at the container terminal gate in two directions can also be solved, which will ultimately improve the service level of the container terminal gate.

In order to quantitatively measure the queuing states at a container terminal gate, imbalanced queuing coefficient τ is introduced and defined, which refers to the ratio of the average queue length in arrival direction divided by that in departure direction. The RL should change the traffic direction only if τ reaches a certain value, defined as the critical value of imbalanced queuing coefficient τ^*. Additionally, the critical value is extended to a critical interval to avoid frequent direction changing problem in actual operation. Then, traffic direction of RLs can be managed as follows:

(i) Change to departure direction when $\tau < 1/\tau^*$

(ii) Change to arrival direction when $\tau > \tau^*$

(iii) No change when $1/\tau^* \leqslant \tau \leqslant \tau^*$

It is noticeable that the queue length counted at a container terminal gate includes not only container trucks in waiting queue but also those being served. This is because during off-peak period, a container truck might be directly served without any waiting queues. In this case, if only waiting queue of container trucks is counted, then the direction of the RL should be kept in departure direction ($\tau = 0$). This is not necessary, since traffic volume in both directions is less during off-peak period.

2.2. Scheduling Rules of RLs. Whether RLs should change their traffic direction or not is based on the rules defined

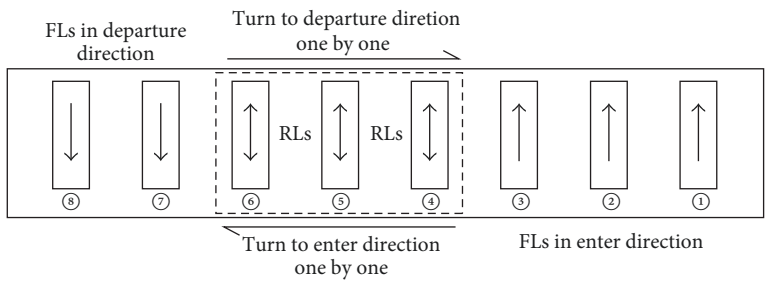

Figure 2: Changing order of RLs.

in Section 2.1. If several RLs are equipped, the judgment for each RL is made separately, starting from the nearest lane. Take situation in Figure 2 as an example; all three RLs (numbers ④–⑥) are served at departure direction at first. When $\tau > \tau^*$, which means that the number of lanes in arrival (enter) direction is not enough, one or more of the RLs should be changed. In this case, traffic direction of lane number ④, which is most close to the enter direction, will be changed first. If the congestion in enter direction is still serious ($\tau > \tau^*$), the traffic direction of lane number ⑤ will then be changed in sequence. Similarly, when changing RLs to departure direction, the changing starts from lane number ⑥.

3. Optimization Model

3.1. Model Assumptions. Model assumptions are as follows:

(1) First-come-first-served rule for container trucks at the container terminal gate without any reservation is followed.

(2) Service time for all kinds of container trucks follows the same probability distribution at the container terminal gate, and the influence of special containers is not taken into account.

(3) Service time of all container trucks in the container yard is quite random, which follows a certain specific probability distribution according to investigation of port actual operation.

(4) Only lanes for container trucks are considered.

(5) There is no breakdown or maintenance for lanes at the container terminal gate.

3.2. Symbol Description

3.2.1. Parameter Definition. The parameters of the optimization model are shown in Table 1.

3.2.2. Decision Variables. The decision variables are as follows:

n_{in}, n_{out}: number of FLs in arrival and departure direction

n_{va}: number of RLs

τ^*: critical value of imbalanced queuing coefficient

3.3. Model Formulation. Questions of optimization number of RLs and scheduling rules at the container terminal gate can be described as follows: under the condition of fixed throughput of a container terminal, how should the number of FLs in arrival and departure directions and the number of RLs with reasonable scheduling rules be determined so that the total cost under construction and operating stages are minimized?

The optimization model is built as follows:

$$\min \quad C_T = \left\{ C_{\text{in}} n_{\text{in}} + C_{\text{out}} n_{\text{out}} + C_{\text{va}} n_{\text{va}} + \sum_{i=1}^{N} (l_i) \left(C_w + C_f \right) \right\} T \tag{1}$$

$$C_{\text{in}} = C_{d\text{-in}} + C_{l\text{-in}} + C_{e\text{-in}} \tag{2}$$

$$C_{\text{out}} = C_{d\text{-out}} + C_{l\text{-out}} + C_{e\text{-out}} \tag{3}$$

$$C_{\text{va}} = C_{d\text{-va}} + C_{l\text{-va}} + C_{e\text{-va}} \tag{4}$$

$$\text{s.t.} \quad n_{\text{in}} + n_{\text{out}} + n_{\text{va}} = N \tag{5}$$

$$n_{\text{in}} \geq n_{\text{out}} \tag{6}$$

$$l_i = f\left(n_{\text{in}}, n_{\text{out}}, n_{\text{va}}, \tau^*\right), \quad i = 1, 2, \ldots, N \tag{7}$$

Table 1: Parameters of the optimization model.

Symbol	Parameters	Unit
i	Serial number of lanes at the container terminal gate	—
C_T	Total costs of the container terminal gate system	Chinese Yuan (CNY)
$C_{\text{in}}, C_{\text{out}}$	Construction and operating costs per FL in arrival and departure direction at the container terminal gate per hour, including depreciable cost, labor cost, and electric power cost	CNY/lane/hour
$C_{d\text{-in}}, C_{d\text{-out}}$	Depreciable cost per FL in arrival and departure direction at the container terminal gate per hour	
$C_{l\text{-in}}, C_{l\text{-out}}$	Labor cost per FL in arrival and departure direction at the container terminal gate per hour	
$C_{e\text{-in}}, C_{e\text{-out}}$	Electric power cost per FL in arrival and departure direction at the container terminal gate per hour	
C_{va}	Construction and operating costs per RL at the container terminal gate per hour	
$C_{d\text{-va}}$	Depreciable cost per RL at the container terminal gate per hour	
$C_{l\text{-va}}$	Labor cost per RL at the container terminal gate per hour	
$C_{e\text{-va}}$	Electric power cost per RL at the container terminal gate per hour	
C_w	Average waiting time cost per container truck per hour	
C_f	Average fuel cost per container truck per hour	
N	Total number of lanes at the container terminal gate	—
l_i	Average queue length of the ith lane	Vehicle
T	Calculation period	Hour

$$\begin{aligned} &n_{\text{in}}, n_{\text{out}} \in Z_+, \\ &n_{\text{va}} \in Z, \\ &\tau^* > 1, \end{aligned} \tag{8}$$

where objective function (1) minimizes the total cost of the container terminal gate in both construction and operating stages, including construction and operating cost of FLs in arrival direction (the first part) and departure direction (the second part), construction and operating cost for RLs (the third part), and waiting time and fuel costs for all container trucks at the container terminal gate (the fourth part). For a given container terminal, some costs are constant, including construction and operating costs for each lane per time unit (C_{in}, C_{out}, and C_{va}), waiting time cost (C_w), and fuel cost (C_f) for container trucks. The calculation period is also a constant and is determined based on the research condition. Equation (5) restricts the total number of lanes at the container terminal gate to be a constant. Equation (6) restricts the number of FLs, which means that lanes in arrival direction are not fewer than those in departure direction. Equation (7) is the relationship between average queue length for the ith lane and four decision variables (n_{in}, n_{out}, n_{va}, and τ^*). Here, since RLs are changing dynamically, it is impossible to quantify the decision variables through analytical expressions; a simulation model is established to solve this problem, which will be discussed in Section 4. Equation (8) shows value ranges of decision variables.

4. Simulation-Based Metaheuristic Solution Algorithm

Due to challenges inherited in the stage of model formulation, where optimal number of RLs at the container terminal gate and corresponding scheduling rules are targeted, our model cannot be solved directly by any commercial solver (e.g., CPLEX and LINDO). Moreover, some functions proceeded in the model, which are not able to be transformed into any closed-form formulas, need to be described as a black box by simulation method as well. Therefore, to obtain the optimal solution efficiently, an SA metaheuristic algorithm method is designed in this study.

4.1. General Framework. Solution of the model goes into two parts: (1) four decision variables of n_{in}, n_{out}, n_{va}, and τ^* at planning stage and (2) the function l_i with four decision variables at operation stage. Then, a two-loop iteration framework is proposed. The outer loop determines values of four decision variables, n_{in}, n_{out}, n_{va}, and τ^*, while the inner loop determines the value of the function l_i under the given values of decision variables. The SA metaheuristic method is employed to change values of n_{in}, n_{out}, n_{va}, and τ^* in the outer loop iterations. For the inner loop, a simulation model is

used to obtain value of l_i. Finally, the optimal solution can be obtained by the SA metaheuristic method within a reasonable time period.

Solution procedures of the SA metaheuristic method (Lu, 2014) are describes as follows.

Step 1. Obtain an initial solution; let $T = T_0$ (the initial temperature in SA).

Step 1.1. Generate an initial setting for decision variables n_{in}, n_{out}, n_{va}, and τ^* (denoted by $u^{(0)}$).

Step 1.2. Based on $u^{(0)}$, use the simulation model to obtain value of l_i (denoted by $v^{(0)}$).

Step 1.3. Calculate the objective value of the solution ($u^{(0)}$ and $v^{(0)}$), denoted by $F^{(0)}$.

Step 2. Repeat the following steps until one of stopping conditions becomes true.

Step 2.1. Generate R neighbors of $u^{(0)}$, that is, $u^{(n)}$, $n \in \{1, 2, \ldots, R\}$.

Step 2.2. For $n = 1$ to R, repeat the following steps.

Step 2.2.1. Based on $u^{(n)}$, use the simulation model to obtain the value of l_i.

Step 2.2.2. Calculate the objective value, denoted by $F^{(n)}$.

Step 2.2.3. Let $\delta = F^{(n)} - F^{(0)}$.

Step 2.2.4. If $\delta < 0$, set $u^{(0)} = u^{(n)}$.

Step 2.2.5. If $\delta \geq 0$, generate a random number $\chi \in (0, 1)$; if $\chi < e^{-\delta/T}$, $u^{(0)} = u^{(n)}$.

Step 2.3. Set $T = r \times T$.

The stopping criteria include the following: (a) fitness value of solution is equal to zero; (b) temperature is smaller than a given threshold value; (c) the best value of fitness cannot be improved within a given number of external loops.

Key issues for implementing the above SA procedure are as follows: (1) initial setting $u^{(0)}$ for decision variables n_{in}, n_{out}, n_{va}, and τ^*; (2) solution obtaining $v^{(0)}$ for l_i by a simulation model; (3) solution evaluating of the objective functions; and (4) neighborhood defining of solution. The first, third, and fourth issues are further addressed in Sections 4.1.1 to 4.1.3, while the second issue is addressed in Section 4.2.

4.1.1. Generating an Initial Solution. The initial setting for four decision variables (n_{in}, n_{out}, n_{va}, and τ^*) is the starting point of the proposed metaheuristic method and is critical for the efficiency of solution process. According to previous experience, when generating an initial solution for the decision variables, throughput of the terminal is divided into two parts: import throughput and export throughput. Next, the numbers of FLs in departure direction n_{out} and arrival direction n_{in} are calculated based on the import and export throughput. Moreover, since the construction and operating costs of a RL are higher than those of a FL, the initial number of the RLs n_{va} is set as zero. Finally, the initial critical value of imbalanced queuing coefficient $\tau^{*(0)}$ is determined. In this way, a set of initial solutions for four decision variables can be obtained; that is, $u^{(0)} = ({n_{\text{in}}}^{(0)}, {n_{\text{out}}}^{(0)}, 0, \tau^{*(0)})$.

4.1.2. Evaluating Solutions. After the previous steps, initial solution for the decision variables $u^{(0)}$ is obtained. Then, average queue length of the ith lane l_i can be obtained based on simulation results. After that, the value of $u^{(0)}$ and l_i can be substituted into Expression (1) to calculate the value of the objective function.

4.1.3. Neighborhood of a Solution in SA. During each iteration, the SA heuristic method explores solution space by moving from current solution u to another solution in its neighborhood $N(u)$. The neighborhood of solution u needs to meet all the following requirements: (1) Number of elements of lanes at the container port gate (n_{in}, n_{out}, and n_{va}) changes randomly by plus one or minus one or remains stable. (2) Total number of lanes at the container port gate (N) remains stable. (3) The number of FLs in arrival direction (n_{in}) should not be fewer than that in departure direction (n_{out}). (4) There is at least one FL in each direction (n_{in} and n_{out}), respectively. (5) The number of RLs (n_{va}) should not be less than zero. (6) The critical value of imbalanced queuing coefficient (τ^*) changes randomly by plus 0.1 or minus 0.1 or remains stable. (7) The critical value of imbalanced queuing coefficient (τ^*) should be larger than 1. (8) At least one of four decision variables ($n_{\text{in}}, n_{\text{out}}, n_{\text{va}}$, and τ^*) changes.

4.2. Simulation Model. In the SA method, since the average queue length of the ith lane l_i cannot be calculated by numerical method, a simulation model for container port gate system is established by using Rockwell Arena software 10.0 to obtain the value of l_i corresponding to each set of decision variables.

4.2.1. Logic Model. According to the operating procedures of the container trucks arriving at the terminal with RLs, the logic model of the container terminal gate system can be determined (shown in Figure 3).

In the logic model, the key operation point of the container terminal gate system is the direction changing of RLs. Logic of detailed lane changings is shown in Figure 4.

In case of container trucks departing from terminals, similar logical framework is defined for direction setting of RLs. The only difference is that, in case of changing the traffic direction of a RL into departure direction, the judgement criteria of $\tau < 1/\tau^*$ should be met and it must be ensured that all the container trucks in arrival direction have already passed the gate.

4.2.2. Simulation Model Establishment. Once the logic model is determined, the Rockwell Arena software is used to

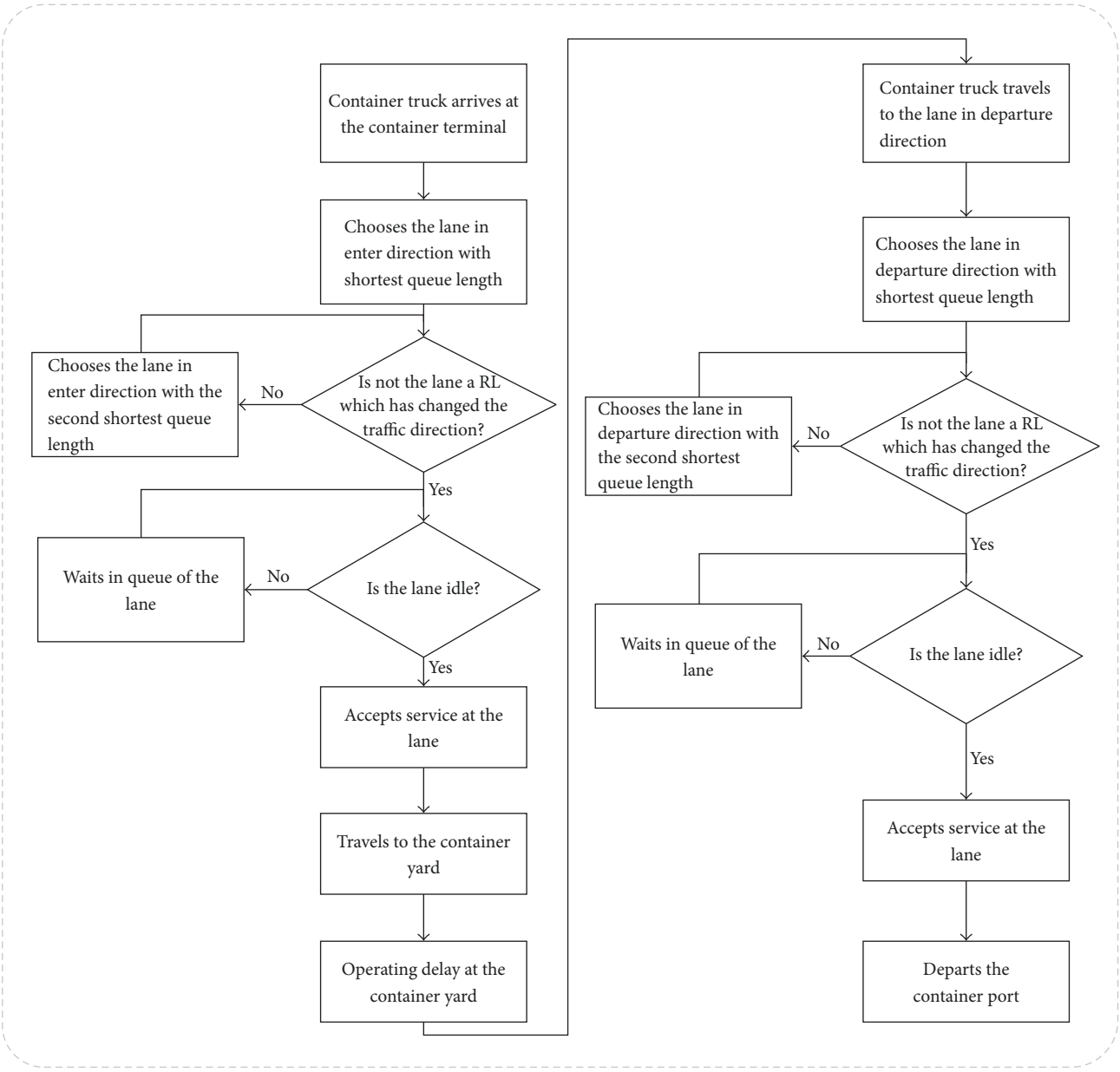

Figure 3: Logic model of the container terminal gate system with RLs.

simulate the model of container terminal gate system. The simulation model consists of four submodels, that is, *create container truck*, *RL scheduling*, *entering port,* and *departing port*. Interface of the simulation model is shown in Figure 5.

(1) Submodel of Create Container Truck. *Create container truck* submodel describes the creation and initialization processes of container truck entities. Firstly, a *Create* module is used to create a container truck entity. Then, by loading from data files of each container truck, the arrival time interval and waiting time are obtained and assigned to each container truck by two *Read/Write* modules separately. Next, a *Delay* module is used to defer the container truck entity based on the real arrival time interval, so that every entity can arrive at a proper time. Finally, a *Separate* module is adopted to send the entity back to *Read Arrival Time* module through the *Original exit point* and read the next arrival time interval from data files. On the other hand, a copy of the container terminal gate entity is generated by the same module and sent to the next submodule at the *Duplicate exit point* by combining the *Route* and *Station* modules.

(2) RLs Scheduling Submodel. This submodel schedules direction changing of RLs. Firstly, a *Decide first container truck* module is used to judge whether the current entity is the first arrival of the system. For the initial state, traffic direction of all RLs is arrival direction, which is used to make sure that numbers of lanes in enter direction are more than those in

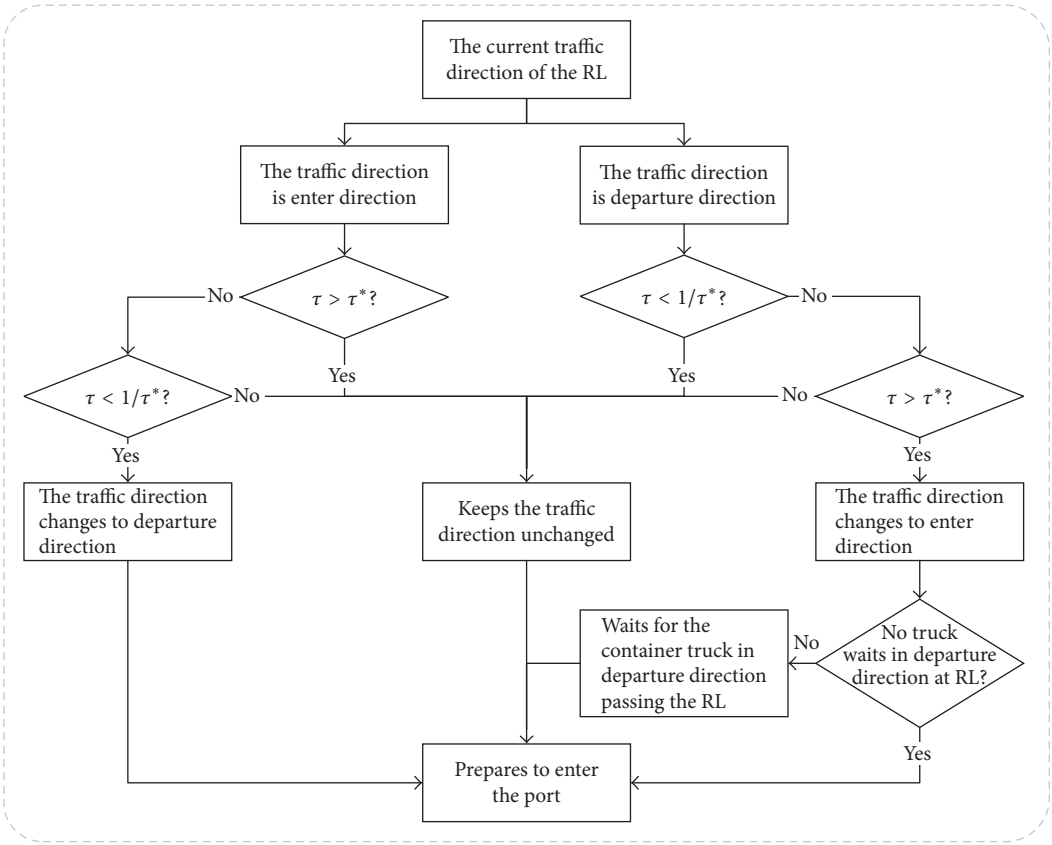

Figure 4: Logic of the changing traffic direction of RLs when container truck enters the terminal.

departure direction. An *Assign* module is used to set this initial stage as mode 1.

In case of other following container truck entities, *Decide mode_1* module is firstly used to judge the traffic direction of each RL. For arrival direction, models of *Decide variable in* and *Decide variable change to 2* will be used to judge whether the criteria of changing traffic direction have been met or not. If not, keep the traffic direction of the RL staying in mode 1; otherwise, an *Assign* module is used to convert the traffic direction to mode 2. Similarly, the process of traffic direction changing from departing to arrival direction is accomplished by a series of *Decide* modules in the submodel.

It is noticeable that even if the criteria of changing traffic direction to enter direction have been achieved but there are still some container trucks queueing in departure direction at the RL, then the traffic direction of the RL will keep in departure direction to prevent further congestions. Only when all the container trucks in departure direction have passed the RL will the traffic direction of RL change and serve in arrival direction. This process is finished by a series of *Decide* modules. Finally, four *Assign* modules are used to set the values of current modes, especially the traffic direction of the RL. Then the entities of container trucks will be exported to the next submodel.

(3) Entering Port Submodel. Entering port submodel accounts for two processes: container trucks accepting service at lanes in arrival direction and waiting at the terminal. Two *Choose gate* submodules and two *Decide gate* modules are firstly used to describe the selecting processes of lanes in mode 1 (arrival direction) and mode 2 (departure direction) of the RL. Then, multiple *Process* modules are used to describe service process of container trucks at lanes in arrival direction. Finally, the *Delay time* module is adopted to represent the process of container truck staying in the container terminal and preparing to depart the system.

(4) Departing Port Submodel. Similar to *RLs scheduling* submodel, this submodel starts with container trucks arriving at lanes in departure direction and ends up with the trucks leaving. At first, a *Decide* module is used to decide the traffic direction of each RL. If the mode is mode 1, that is, arrival direction, the container trucks will choose other lanes in departure direction for service. However, if the traffic direction of the RL should be changed to departure direction, that is, mode 2, several *Decide* modules will be used to further judge whether the queue length in arrival direction of the RL is zero. If so, the RL can be used as a lane in departing direction. The container trucks entities will be served at the terminal gate by a combination of several *Choose gate* submodels, *Decide* modules, and *Process* modules. At the end of this submodel, a *Dispose* model is adopted to send truck entities out of the system.

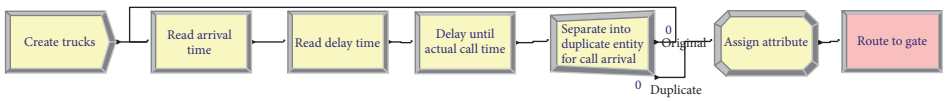

(a) *Create container truck* submodel

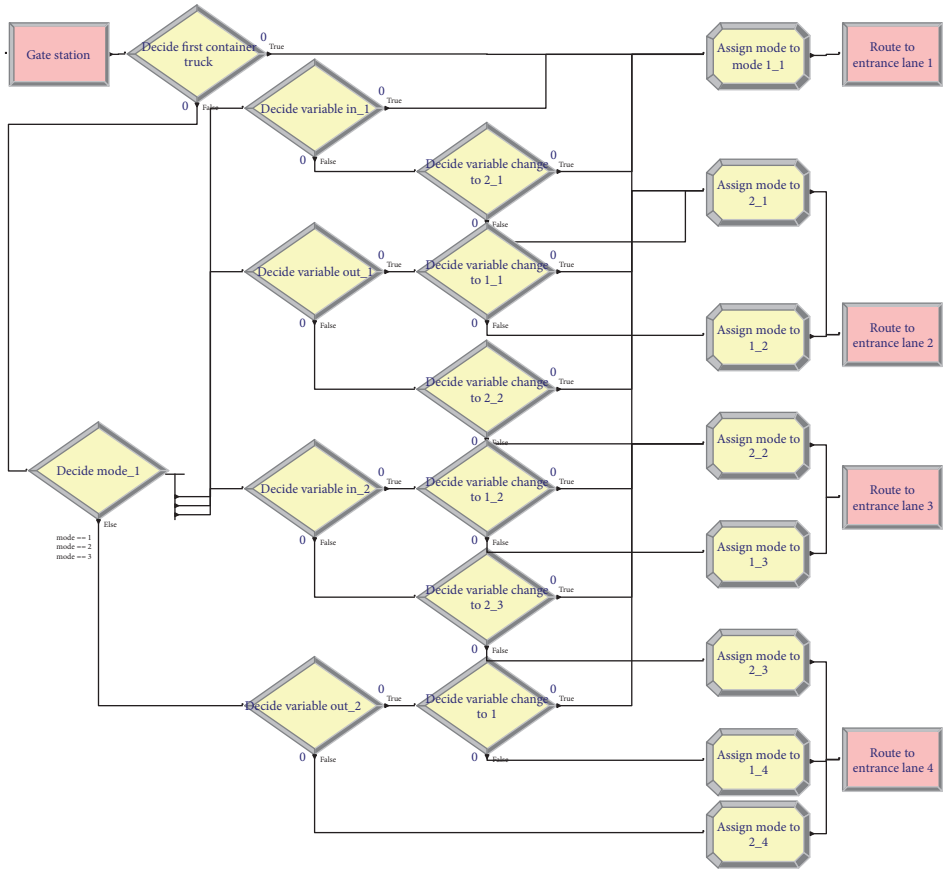

(b) *RLs scheduling* submodel

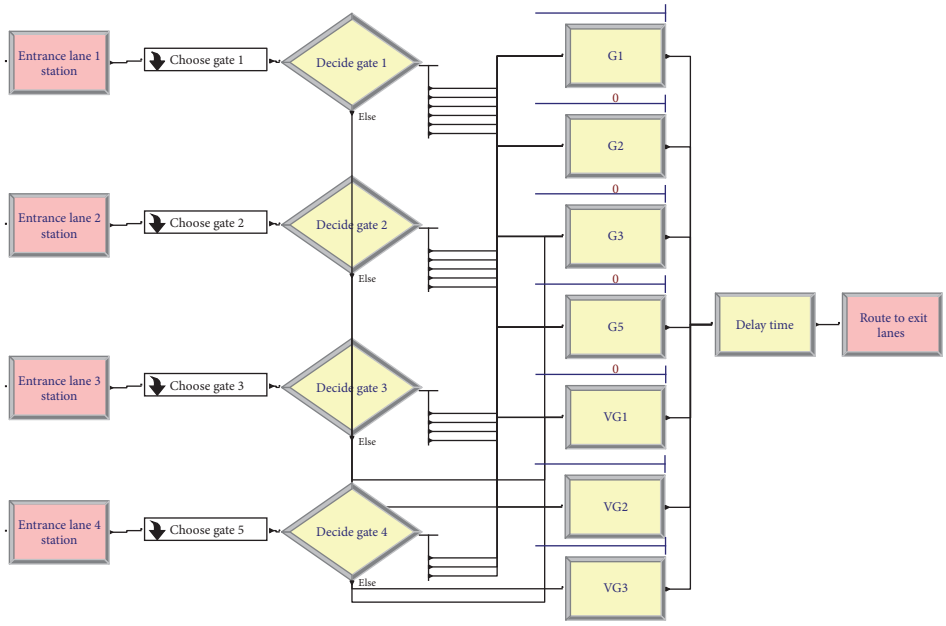

(c) *Entering port* submodel

FIGURE 5: Continued.

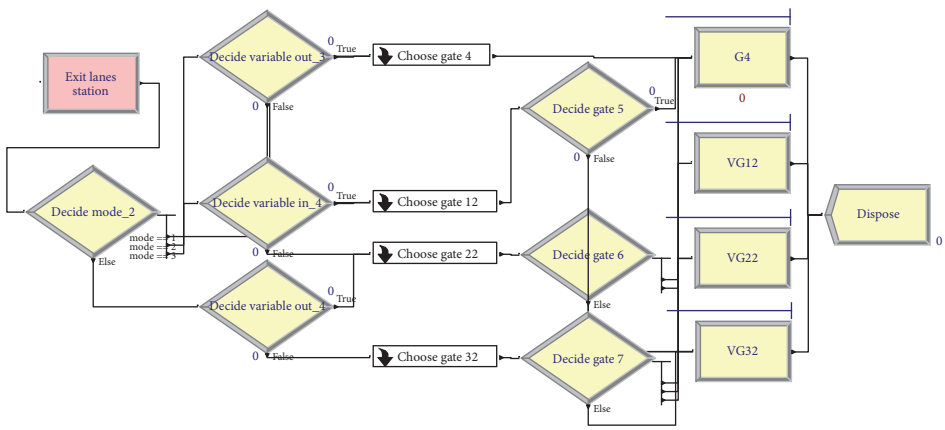

(d) *Departing port* submodel

Figure 5: Interface of the simulation model of the container terminal gate system.

Table 2: Cost coefficients of lanes at container gates.

Parameters	Symbols	Units	Values
Depreciable costs coefficients of FLs in enter direction	$C_{d\text{-in}}$	CNY/hour	8.00
Depreciable costs coefficients of FLs in departure direction	$C_{d\text{-out}}$	CNY/hour	7.00
Depreciable costs coefficients of RLs	$C_{d\text{-va}}$	CNY/hour	15.00
Labor costs coefficients of lanes	$C_{l\text{-in}}, C_{l\text{-out}}, C_{l\text{-va}}$	CNY/hour	20.00
Electric power cost coefficients of lanes	$C_{e\text{-in}}, C_{e\text{-out}}, C_{e\text{-va}}$	CNY/hour	2.00
Waiting time cost coefficient of container trucks	C_w	CNY/vehicle/hour	25.00
Fuel cost coefficient of container trucks	C_f	CNY/vehicle/hour	7.50

4.2.3. Model Parameters. Input parameters of the simulation model include the following:

(1) Container terminals: scale of container terminals, modes of the berth arrangement, and road network

(2) Containers: container throughput, number and proportion of different types of containers, and storage period of the containers at container yard

(3) Container trucks: running speed and arrival patterns of container trucks

(4) Container terminal gates: position of the terminal gate, the number and service efficiency of different types of lanes, and critical values of imbalanced queuing coefficients

Output parameters of the simulation model are the average queue length of container trucks at each lane during the calculation period which is corresponding to different combinations of lane arrangement scheme and the critical value of imbalanced queuing coefficients.

5. Case Study

In order to verify the effectiveness and practicability of the proposed method, a hub container terminal in northeast of China is used as a case in this paper to study the necessity of setting RLs, the optimal number of RLs, and the reasonable scheduling rules. For the SA metaheuristic method, the initial temperature $T = 10{,}000$, temperature length $R = 20$, and cooling rate $r = 0.6$. Stopping criteria are $T < 0.01$ or no further improvement of the fitness's best value after five external loops.

5.1. Input Parameters

5.1.1. Background of the Container Terminal. As the second largest container transportation hub in China, there are 14 container berths, which can berth fifth- and sixth-generation container ships. The designed capacity of the terminal is 9.1 million TEU. In 2010, the port berthed 5300 liner ships and finished 5.262 million TEU throughput of containers, in which the import and export throughput of containers reached 2.003 million TEU and 3.259 million TEU, respectively. According to the expected throughput of containers, the operators of the port planned to build 8 FLs totally. However, considering the imbalanced traffic volumes in two directions, they wonder whether it is necessary to build some RLs at the container gate.

Cost coefficients are summarized in Table 2.

5.1.2. Initial Decision Variables. According to ratio of the import and export throughput of the terminal, it can be determined that the initial number of FLs in arrival direction $n_{\text{in}}^{(0)}$ is 5, and the number of FLs in departure direction $n_{\text{out}}^{(0)}$ is 3. Moreover, the initial number of RLs $n_{\text{va}}^{(0)}$ is set as 0, and initial critical value of imbalanced queuing coefficient $\tau^{*(0)}$ is

Table 3: The summation of the average queue length of all lanes and the total costs of the container terminal gate system corresponding to different solutions.

Serial number of the decision variable	Value of the decision variable	Summation of the average queue length of all lanes (veh/h)	Total costs of the container terminal gate system C_T (Yuan)
$u^{(1)}$	(5, 3, 0, 1.4)	1.4731	2,495,521
$u^{(2)}$	(5, 3, 0, 1.6)	1.4731	2,495,521
$u^{(3)}$	(6, 2, 0, 1.5)	31.7383	11,120,770
$u^{(4)}$	(6, 2, 0, 1.4)	31.7383	11,120,770
$u^{(5)}$	(6, 2, 0, 1.6)	31.7383	11,120,770
$u^{(6)}$	(4, 4, 0, 1.5)	0.7472	2,280,096
$u^{(7)}$	(4, 4, 0, 1.4)	0.7472	2,280,096
$u^{(8)}$	(4, 4, 0, 1.6)	0.7472	2,280,096
$u^{(9)}$	(4, 3, 1, 1.5)	0.3448	2,235,606
$u^{(10)}$	(4, 3, 1, 1.4)	0.3440	2,235,366
$u^{(11)}$	(4, 3, 1, 1.6)	0.3429	2,235,070

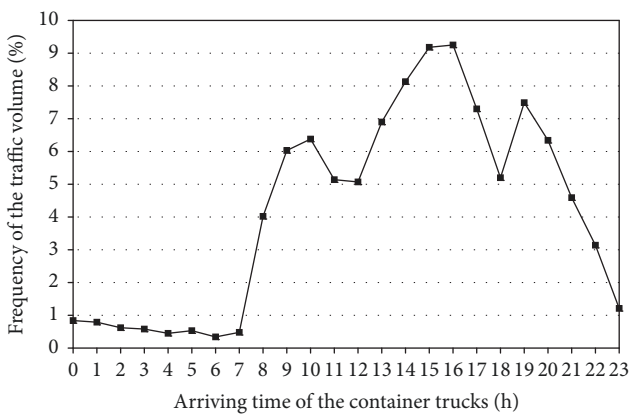

Figure 6: Frequency of traffic volume per hour.

set as 1.5. Therefore, the initial decision variables $u^{(0)}$ are (5, 3, 0, and 1.5).

5.1.3. Arrival Patterns of Container Trucks. According to the historical data of container truck arrival in 2010, frequency of traffic volume per hour can be obtained (shown in Figure 6), which work as the inputs for the simulation model. According to Figure 5, peak periods in day time mostly take place around 15:00 and 16:00, whose frequency is around 9.2%. Meanwhile, peak periods at night usually take place around 19:00 with frequency of 7.5%.

5.1.4. Serving Time at Container Terminal Gates. By employing the nonparametric test, comparison results of serving time are shown in Figure 7. For lanes in arrival direction (a), two-tailed probability (0.095) is larger than 0.05, indicating that the test sample has no significant difference from the theoretical distribution whose significant level α is 0.05. Therefore, the serving time at lanes in arrival direction follows normal distribution with mean value of 0.971 and standard deviation of 0.32. Similarly, testing result of two-tailed probability of serving time at lanes in departure direction (b) is 0.2, which is also larger than 0.05. Therefore it fits to a normal distribution with mean value of 0.796 and standard deviation of 0.34.

In summary, the serving time at the container terminal gate fits to normal distribution in this paper, and the average serving time at lanes in arrival direction is longer than that in departure direction.

5.2. Results Analysis. Once the input parameters are determined, the average queue length of each lane corresponding to the initial solution ($u^{(0)}$ = (5, 3, 0, 1.5)) can be obtained in a calculation period. Summation of all the average queue lengths is 1.4731. Thus, total cost of the container terminal gate system, corresponding to initial solution by Expression (1), can be obtained as 2,495,521 Yuan.

Based on the neighborhood analysis of solutions in SA, there are 11 satisfactory solutions in the neighbor of $u^{(0)}$: $u^{(1)} = (5, 3, 0, 1.4)$, $u^{(2)} = (5, 3, 0, 1.6)$, $u^{(3)} = (6, 2, 0, 1.5)$, $u^{(4)} = (6, 2, 0, 1.4)$, $u^{(5)} = (6, 2, 0, 1.6)$, $u^{(6)} = (4, 4, 0, 1.5)$, $u^{(7)} = (4, 4, 0, 1.4)$, $u^{(8)} = (4, 4, 0, 1.6)$, $u^{(9)} = (4, 3, 1, 1.5)$, $u^{(10)} = (4, 3, 1, 1.4)$, and $u^{(11)} = (4, 3, 1, 1.6)$. Next, summation of the average queue lengths of all lanes in calculation period of each solution could be obtained from the simulation model. Then, the total costs of the container terminal gate system corresponding to each solution can be calculated through Expression (1).

As shown in Table 3, among the 11 solutions, $u^{(11)} = (4, 3, 1, 1.6)$ is the optimal solution with lowest total cost of 2,235,070 Yuan.

Following procedures of the SA metaheuristic method, it is finally obtained that the total cost of the container terminal gate system (C_T) reaches the minimum value when decision variable u is (4, 3, 1, 1.6), that is, setting one RL, and the critical value of imbalanced queuing coefficient is 1.6. Compared with the initial solution (set 5 FLs in arrival direction and 3 FLs in departure direction), the optimal

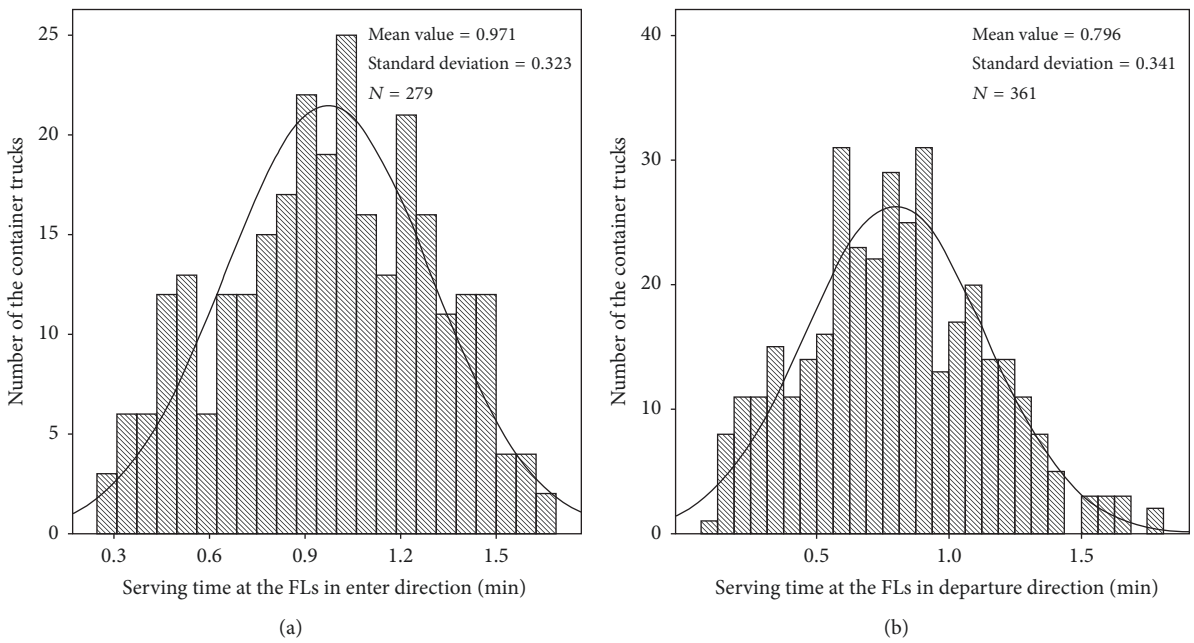

Figure 7: Testing result of serving time at the FL.

Table 4: Selection of the cost coefficients.

Group number	Cost coefficients which are changed	Change to n times of the control group
(1)	$C_{l\text{-in}}, C_{l\text{-out}}, C_{l\text{-va}}, C_w$	0.5
(2)	$C_{l\text{-in}}, C_{l\text{-out}}, C_{l\text{-va}}, C_w$	1.5
(3)	$C_{l\text{-in}}, C_{l\text{-out}}, C_{l\text{-va}}, C_w$	2
(4)	$C_{d\text{-in}}, C_{d\text{-out}}, C_{d\text{-va}}$	0.5
(5)	$C_{d\text{-in}}, C_{d\text{-out}}, C_{d\text{-va}}$	1.5
(6)	$C_{d\text{-in}}, C_{d\text{-out}}, C_{d\text{-va}}$	2

solution can decrease the summation of all the average queue lengths and total costs by 76.7% and 10.4%, respectively.

5.3. Sensitivity Analysis for the Cost Coefficients. In order to verify the robustness of the proposed metaheuristic method, the sensitivity of cost coefficients is analyzed in this section. Six groups of cost coefficients (shown in Table 3) are selected to investigate the influence caused by variation of local labor and land costs on the proposed method. Then, the variation of optimal total costs along with cost coefficients changing is also analyzed.

In Table 4, groups numbers (1)~(3) change the labor costs, including the labor costs of workers at the container terminal gate and the labor costs of container drivers based on the control group (the optimal solution of the case study). Meanwhile, groups numbers (4)~(6) change the construction costs, which is represented as the depreciable costs of all lanes at the gate. The SA metaheuristic method proposed is used to analyze the total costs of the container terminal gate system and its optimal decision variables corresponding to the six groups. Finally, variation of the total costs compared with the control group can be obtained, as shown in Table 5.

Comparing groups numbers (1)~(3) with the control group, it is found that the variation of total costs of the container terminal gate system relies on linear growth of labor costs. The total costs will be increased by 33.0% as the labor costs rise by 50%. Similarly, comparing groups numbers (4)~(6) with the control group, it is clear that the variation of total costs basically relies on linear growth of the depreciable costs. With slight disturbance, the total costs will rise by about 13.3% when the depreciable costs increase by 50%.

It is noticeable that, for group (1) (labor costs change to half time of the control group) and group (6) (depreciable costs become twice of the control group), the ratio of the depreciable costs to the total costs rises. In this case, the cost of setting a RL increases and the optimal decision variable u changes from $(4, 3, 1)$ to $(4, 4, 0)$, which means that replacing a RL with a FL in departure direction is better. In this way, the depreciable costs will be decreased, although the waiting time costs and fuel costs increase. Then, the total costs of the container port gate system will be reduced.

6. Conclusions and Discussions

This paper proves the necessity of setting RLs, which can efficiently alleviate the congestion at the container terminal gate and improve the service level of the terminal gate. However, since changing the traffic direction of the RL

Table 5: Total costs and their variation corresponding to each group.

Group number	Optimal total costs (Yuan)	Variation of total costs compared with the control group (%)	Optimal decision group u
Control group	2,235,070	0	(4, 3, 1)
(1)	1,496,720	−33.0	(4, 4, 0)
(2)	2,973,421	33.0	(4, 3, 1)
(3)	3,711,771	66.0	(4, 3, 1)
(4)	1,937,230	−13.3	(4, 3, 1)
(5)	2,532,910	13.3	(4, 3, 1)
(6)	2,805,696	25.5	(4, 4, 0)

will take time, to some extent, the service efficiency will definitely decrease. Moreover, the cost of RLs is larger than cost of FLs. Therefore, simply increasing the number of RLs does not mean a consequential total cost decrease, and the optimal number of the RLs needs to be determined cautiously and comprehensively. In this paper, aiming at minimizing the total costs, including the construction costs and operating costs of the whole container terminal gate system, an optimal model is first constructed to determine the optimal number of the RLs and reasonable scheduling rules at a terminal gate. Then, an SA metaheuristic method is proposed to solve the optimal model, and a simulation model is established to obtain parameters that cannot be determined by analytical methods. Finally, the proposed methodology is verified by quantitative conclusions obtained from a specific case study. Specifically, three conclusions are shown as follows:

(1) For the container terminal in case study, it is optimal to set one RL at the terminal gate and the optimal critical value of imbalanced queuing coefficient is 1.6.

(2) Compared with the design plan without RLs, the optimal plan can decrease the average queue length by 76.7%, and the total costs of the container terminal gate system can also be reduced by 10.4%.

(3) The variation of the total costs is more sensitive to the labor costs than the land costs.

The proposed method can provide a theoretical foundation for the container terminal planning and construction. The conception of the RL can also serve as a new idea for the smart container terminal gate system construction and management. However, there are still some limitations in this paper. For example, without simulating the operating process of container trucks in detail, this paper only considered the service time of the container trucks in container yards. As a next-step study, the handling process of container trucks in the yard will be further refined to reflect the actual situation.

Conflicts of Interest

The authors declare that they have no conflicts of interest.

Acknowledgments

The authors would like to acknowledge the National Natural Science Foundation of China (Grants no. 51779037 and no. 51709037) for supporting this research.

References

[1] R. Namboothiri and A. L. Erera, "Planning local container drayage operations given a port access appointment system," *Transportation Research Part E: Logistics and Transportation Review*, vol. 44, no. 2, pp. 185–202, 2008.

[2] X. M. Chen, X. S. Zhou, and G. F. List, "Using time-varying tolls to optimize truck arrivals at ports," *Transportation Research Part E: Logistics and Transportation Review*, vol. 47, no. 6, pp. 965–982, 2011.

[3] G. Chen, K. Govindan, and M. M. Golias, "Reducing truck emissions at container terminals in a low carbon economy: Proposal of a queueing-based bi-objective model for optimizing truck arrival pattern," *Transportation Research Part E: Logistics and Transportation Review*, vol. 55, no. SI, pp. 3–22, 2013.

[4] G. Chen, K. Govindan, and Z. Yang, "Managing truck arrivals with time windows to alleviate gate congestion at container terminals," *International Journal of Production Economics*, vol. 141, no. 1, pp. 179–188, 2013.

[5] Z.-Z. Yang, G. Chen, and D.-P. Song, "Integrating truck arrival management into tactical operation planning at container terminals," *Polish Maritime Research*, vol. 20, pp. 32–46, 2013.

[6] M.-H. Phan and K. H. Kim, "Negotiating truck arrival times among trucking companies and a container terminal," *Transportation Research Part E: Logistics and Transportation Review*, vol. 75, pp. 132–144, 2015.

[7] A. E. Azab and A. B. Eltawil, "A simulation based study of the effect of truck arrival patterns on truck turn time in container terminals," in *Proceedings of the 30th European Conference on Modelling and Simulation, ECMS 2016*, pp. 80–86, Regensburg, Germany, June 2016.

[8] D. Ambrosino and L. Peirano, "Truck arrival management at maritime container terminals," in *Proceedings of the 30th European Conference on Modelling and Simulation, ECMS 2016*, pp. 114–120, Regensburg, Germany, June 2016.

[9] G. Chen and L. P. Jiang, "Managing customer arrivals with time windows: a case of truck arrivals at a congested container

terminal," *Annals of Operations Research*, vol. 244, no. 2, pp. 349–365, 2016.

[10] C. Q. Guan and R. F. Liu, "Container terminal gate appointment system optimization," *Maritime Economics & Logistics*, vol. 11, no. 4, pp. 378–398, 2009.

[11] L. Hu, X. N. Shi, S. Voss, and W. G. Zhang, "Application of RFID Technology at the Entrance Gate of Container Terminals," in *2nd International Conference on Computational Logistics (ICCL 2011)*, vol. 6971 of *Lecture Notes in Computer Science*, pp. 209–220, Springer, Hamburg, Germany, 2011.

[12] Y. Tsai, T. Dusanter, Y. Wu, C. Ai, and Q. Catucoli, "Automatic truck processing time extraction at marine container terminal gates using low-frame-rate images," *Journal of Intelligent Transportation Systems: Technology, Planning, and Operations*, vol. 16, no. 4, pp. 211–225, 2012.

[13] M. Fleming, N. Huynh, and Y. C. Xie, "Agent-based simulation tool for evaluating pooled queue performance at marine container terminals," *Transportation Research Record*, no. 2330, pp. 103–112, 2013.

[14] D. Ambrosino and C. Caballini, "Congestion and truck service time minimization in a container terminal," in *Proceedings of the International Conference on Maritime-Port Technology and Development, MTEC 2014*, pp. 1–10, Trondheim, Norway, October 2014.

[15] E. A. Kadir, S. L. Rosa, and H. Gunawan, "Application of RFID Technology and E-Seal in Container Terminal Process," in *proceedings of the 4th International Conference on Information and Communication Technology (ICoICT)*, Bandung, Indonesia, 2016.

[16] M. Zeng, W. M. Cheng, and P. Guo, "A transient queuing model for analyzing and optimizing gate congestion of railway container terminals," *Mathematical Problems in Engineering*, vol. 2014, Article ID 914706, pp. 1–13, 2014.

[17] Y. Keceli, "A simulation model for gate operations in multipurpose cargo terminals," *Maritime Policy & Management*, vol. 43, no. 8, pp. 945–958, 2016.

[18] D. Liu, X. S. Cao, and X. Miao, "Research on tidal traffic based variable lane isolation belt setting," *Hebei Journal of Industrial Science and Technology*, vol. 31, no. 05, pp. 14–19, 2014.