Hindawi
Journal of Advanced Transportation
Volume 2018, Article ID 4682591, 12 pages
https://doi.org/10.1155/2018/4682591

Research Article

Public Transit Loyalty Modeling Considering the Effect of Passengers' Emotional Value: A Case Study in Xiamen, China

Shi-chao Sun

College of Transportation Engineering, Dalian Maritime University, Dalian, 116026, China

Correspondence should be addressed to Shi-chao Sun; sunshichao1988@hotmail.com

Received 22 May 2018; Revised 17 July 2018; Accepted 30 July 2018; Published 7 August 2018

Academic Editor: Luigi Dell'Olio

To better sustain passengers' loyalty towards bus service, this paper addressed the modeling of the public transit loyalty by the use of structural equation model. As a novel hypothesis, the emotional value was considered to have effects on the perceived value of bus services in this study, which reflected the degree of passengers' emotional dependence on the public transit. Specifically, in order to better assess the loyalty, seven unobserved variables were measured to construct the structural model, namely, "service guarantee," "operational services and efficiency," "emotional value," "perceived value," "expectation," "satisfaction," and "loyalty." The goodness-of-fit of the model was estimated and evaluated by using the survey data harvested from Xiamen, China. Besides, the index score of variables was also computed to help determine targeted approaches to better improve the level of bus service. The results indicated that the time cost and the monetary cost actually had no effects on the perceived value of users in the case study. At the same time, however, it also proved that passengers' emotional value towards the public transit indeed affected passengers' perception of the service value. In addition, whether users' perceived value was as expected determined how much passengers satisfied with the service. Regarding the index score of variables, it indicated a great dissatisfaction of passengers towards the current bus service. Unexpectedly, the score of loyalty even still retained a relatively high level, which reflected continue-to-use willingness of passengers. It implied that being subject to economic conditions and other factors, passengers were captive and had to continue relying on the public transit, in spite of their dissatisfaction. As for the improvement direction of bus services, targeted approaches should be determined to improve the quality of bus service, regarding the aspects of "condition of facilities in the bus," "driving stability and comfort," "vehicle speed," and "safety."

1. Introduction

Public transportation (PT) systems including common buses and metro systems have been long considered as an effective and sustainable way to alleviate traffic jams and promote the quality of trips. The rapid growth in the number of private cars led to a very serious traffic congestion problem in most metropolis, especially in China where the level of urbanization has been developed significantly in the past decade. To this end, the local governments have been hard working for years to construct an efficient "Transit Metropolis with a Bus Priority," where most residents were expected to prefer and rely on the public transit. In this context, developing the bus priority does not simply rely on the improvement or new constructions of public transit facilities on the supply side but also needs a relatively competitive improvement of bus services to satisfy the passengers' demand. Thus, in order to evaluate the effectiveness of public transit improvements, an integrated assessment method should be established to monitor the dynamic development of bus service quality. However, the current practice in China usually employs several objective operational indicators to measure the quality of bus service, such as travel time, time-reliability, and waiting time. It lacks assessing the bus services from the perspective of the demand side and also neglects to discuss how the bus services quality are perceived by passengers. This limitation has led to a common phenomenon of public transportation systems in China, which can be summarized as "sufficient facilities with no high-quality service." Therefore, the quality assessment method of bus services in China needs to be

improved, and passengers' perception of bus service quality should be measured with the "public transit loyalty" as the core [1–3].

In marketing, the definition of customer's "satisfaction" is different from "loyalty." When a customer feels satisfied, it mostly reflects a high degree of conformity between one's expectation of the product/service utility and the actual value perceived by him/her in a short term. However, customers' loyalty can be regarded as a long-term combination of behaviors and willingness of patronage [4]. Although the satisfaction is usually treated as a variable affecting the loyalty directly and significantly, the latter one seems to be more complex since the long-term accumulation of personal emotions/attitudes plays an important role in its development progress. The methodology of customer loyalty and also the assessment of perceived service quality have been widely applied in the area of public transportation [3, 5–12]. In this context, the relationship between passengers' perceived value of bus services, the level of satisfaction, and the loyalty has recently received much attention, since understanding what affects the public transit loyalty can be used to develop targeted approaches to retain existing passengers and increase the ridership [11]. To this end, when regarding this issue, it should account for how to assess the perceived quality of bus services, the definition of public transit loyalty, and the mechanism of related variables interacting with each other.

In the context of perceived quality of bus services, a number of previous studies have focused on the quality measurement [13]. Susniene [14] employed the framework of SERQUAL model and derived the related factors to assess the bus service quality, such as reliability, tangibility, and assurance. Sezhian et al. [2] adopted a discriminant analysis method to study the passengers' expectations by analyzing attribute-based perceptual mapping in a bus company in India, and the quality of bus services was measured by using 18 indicators, such as seat comfortable, cleanliness, driver behavior, stopping at correct place, and obeying traffic rules. Similarly, de Ona et al. [6] measured the bus service quality by using 12 indicators, among which punctuality, cleanliness, safety, courtesy, and accessibility were considered. While the number of parameters evaluating the service quality was reduced to six in the work of dell'Olio et al. [8], a discrete choice model was adopted to assess the effectiveness and influence of related factors. Kendall's algorithm and the Delphi method were, respectively, employed by Cafiso et al. [15, 16] to study the safety issues in the management of bus operation, and factors related to drivers' skills and behaviors, the maintenance of vehicles, and traffic issues on roads were taken into account for assessing bus service quality. Gonzalez-Diaz and Montoro-Sanchez [17] segmented the indicators into three groups to evaluate the bus services, respectively, including (1) quality of service outside the vehicle, (2) quality of vehicle, and (3) fares and schedules. Although the combination of indicators used to assess the bus service quality varied from studies to studies in the literature, the general evaluation methods and the aspects of related indicators selection were relatively consistent. Nevertheless, it was also necessary to use statistical analysis techniques to better explore and confirm the correlations of variables in the practice.

Regarding the definition of public transit loyalty, TCRP Report 49 indicated "customer loyalty is reflected by a combination of attitudes and behaviors. It is usually driven by customer satisfaction, yet also involves a commitment on the part of the customer to make a sustained investment in an ongoing relationship with transit services (p. 18)" [18]. However, there still seems to be no standardized or even common way to assess the loyalty. Chou and Kim [5] adopted a structural equation model (SEM) to examine the relationship between corporate image, quality of bus services, complaints, satisfaction, and loyalty through an empirical test by using the data harvested from Taiwan and South Korea. The typical characteristics of loyal passengers were defined as repeat patronage, willingness of recommending to others, and high price tolerance. However, Minser and Webb [19] defined the public transit loyalty based on the likeliness of continuous service usage and willingness to recommend. They analyzed the empirical data collected from the Chicago Transit Authority by using a SEM and found that the quality of service, perceived value of service, satisfaction, and corporate image were the key factors affecting passengers' loyalty. Both of the above studies defined a unique "public transit loyalty," but the variable which could reflect passengers' attitudinal preference to continue to use the service was not demonstrated in the model. To this end, some researches extended the definition of loyalty by including the consideration of intended future use and other variables [3, 12, 20, 21].

Nevertheless, in the context of public transit loyalty, passengers may generate a positive or negative emotion/impression towards the service after taking a bus, and how users felt about the mode would be accumulated with the increase in the number of trips [3]. The perception/impression would gradually affect the degree of passengers' emotional dependence on the public transit as well as the loyalty. Thus, it was additionally somewhat different from the conception reflected by the discrete choice model, in which the decision-making process was not only dependent on the utilities but also required emotional attitude shifting for a period of time. This was what the emotional value implied and how it worked. However, the above existing works still neglected to account for the influence of long-term accumulation of personal emotions/attitudes on the perceived value and eventually affecting the level of loyalty. This paper aimed to bridge the gap and enriched the literature. Two main hypotheses were proposed and intended to be examined in the case study of this paper:

(i) The passengers' emotional value towards the public transit would affect how the value of bus services perceived by the users.

(ii) The perceived value combined with user's expectation would have a main effect on his/her satisfaction and eventually influence the loyalty.

Moreover, it was also attempted in the current paper to adopt the index score of variables to better determine the

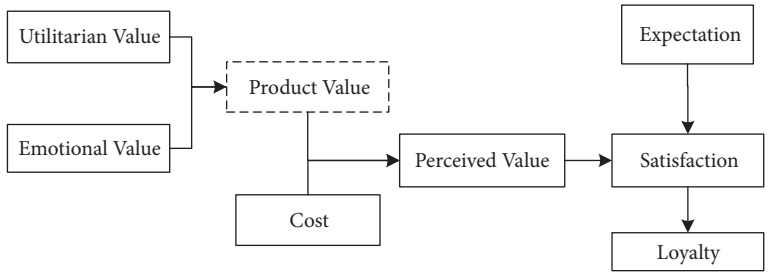

Figure 1: The hypothesized path diagram of the public transit loyalty.

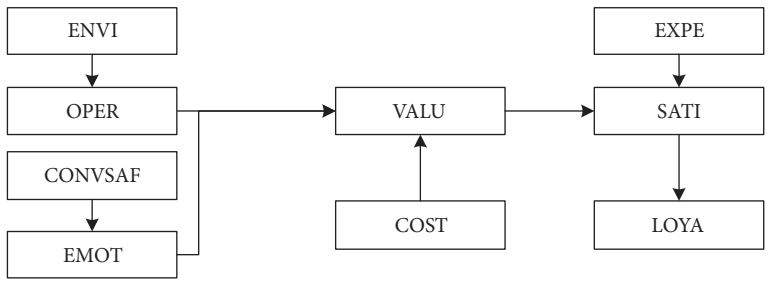

Figure 2: The structural model of public transit loyalty.

direction of improvement on bus services and retain the loyalty by mining related factors.

2. Methods

2.1. SEM and Factor Analyses Methods. The methodology of SEM has been widely applied in statistics and other disciplines. It is a combination technique including factor analysis, path analysis, and regression models. SEM can be used to better identify, estimate and verify the relationship between unobserved variables, and also benefit examining the correlations of an appropriate set of observed variables to measure the latent variable. Thus, there are two kinds of submodels included in SEM: measurement models and structural models. The structural model examines and verifies the links between unobserved variables, in which several measurement models should be determined for unobserved variable measures.

Exploratory factor analysis (EFA) and confirmatory factor analysis (CFA) are two common methods of factor analyses to determine/verify the relationships between variables in SEM. EFA is commonly used to find the relationship between variables, since researchers may not be able to have the empirical knowledge in this context previously [13]. In contrast, however, CFA could only be applied to verify whether the relationships between the variables are as expected. Since the main goal of this study was to examine and verify the proposed hypotheses, CFA was employed here to assess the extended loyalty model derived from the literature, by additionally considering the effect of emotional value on the target variable.

2.2. Hypotheses and Variables. In marketing, the product/service value was usually considered to consist of two parts: the utilitarian value and the emotional value. In this paper, the utilitarian value referred to the subjective measures of bus service quality that corresponded to the objective utilities, while the emotional value denoted the overall feelings or impressions of passengers towards the mode, reflecting the degree of emotional dependence. It could be positive or negative and derived from a long-term accumulation of passengers' bus service experience. It was assumed that the value of bus services perceived by passengers was affected by a combination of the utilitarian value, the emotional value, and also the service cost [3]. However, the perceived value was not considered as the only factor that affected users' satisfaction. It depended on whether the perceived value was as expected. Thus, the satisfaction was determined by the consistency between passenger's perceived value and his/her expectation and eventually affected the loyalty. The hypothesized path diagram was illustrated in Figure 1.

The path diagram could be regarded as a conceptual framework of the structural model, which was derived from the existing literature but additionally taking account of passengers' emotional values (Figure 2). Specifically, the utilitarian value consisted of three unobserved variables, namely, "travel environment and facilities" (ENVI), "operational service and efficiency" (OPER), and "convenience and safety" (CONVSAF). It was assumed that facility conditions may have a direct effect on the bus operation management, and additionally how passengers felt about the mode was more sensitive to the travel safety [12]. Thus, the relationship between unobserved variables could be denoted as shown in Figure 2, which were intended to be confirmed in this study.

The latent variables in the structural model shown in Figure 2 could not be directly observed. Thus, each latent variable needs to be measured by an appropriate set of observed variables. To this end, the measurement model could be estimated and verified through CFA by examining the correlations of corresponding observed variables. The observed variables involved in each initial measurement model were as follows:

(1) Utilitarian Value. The observed variables for measuring the utilitarian value should be, respectively, in terms of environment, facilities, operational efficiency, safety, and also convenience [13].

(1-1) Travel Environment and Facilities (ENVI). In the context of travel environment, the degree of crowdedness, cleanness, suitable temperature, and odor were, respectively, concerned, while on the side of facilities, the overall condition of facilities in the buses and at the stations was taken into consideration.

(1-2) Operational Services and Efficiency (OPER). Drivers' behavior (driving stability and comfort) and the courtesy of crew members were treated as the main indicators for evaluating the service quality inside the bus in this paper [2, 6]. At the same time, regarding the service quality outside the bus, the efficiency of operations, vehicle speed, punctuality, and waiting time were concerned.

(1-3) Convenience and Safety (CONVSAF). As for the convenience of bus services, walking distance reflected the coverage of public transit networks, while the number of transfers indicated the degree of matching between the public transportation route setting and passengers' actual travel need. In addition, the safety of vehicles was measured in terms of security risks caused by human factors and the insufficient attention to the maintenance of the vehicle.

(2) Emotional Value. How to measure the emotional value of consumers had received much attention in marketing. Therefore, according to the measurement model proposed by Babin et al. [1], nine most related observed variables were selected out of twelve to measure passengers' emotions towards bus services, as shown in Table 1.

(3) Costs. The total cost of bus services mainly considered the time cost and also the fare, in which the time cost included waiting time, transfer time, and travel time.

(4) Perceived Value. In this paper, the perceived value was in terms of "the level of service on the basis of the current fare" and "satisfaction of fare at the current level of service," according to Chinese Customer Satisfaction Index Model (CCSI).

(5) Expectation. According to American Customer Satisfaction Index Model (ACSI), passengers' expectation towards bus services could be described by considering both their expectation of overall bus service quality and the expectation of services that would meet their personalized demand.

(6) Satisfaction. Regarding the satisfaction of bus services, Shiftan et al. [3] extended the concept firstly proposed by Oliver [22] to better account for passengers' satisfaction. Other than Oliver [22] using a path analysis method, he constructed a measurement model by taking account of three observed variables, namely, "overall satisfaction towards bus services," "whether the quality of service was as expected," and "how far is the gap from the ideal level of bus services." Such measures of passengers' satisfaction were also employed in the current study.

(7) Loyalty. In marketing, Oliver [22] proposed a four-stage formation theory of loyalty, which had received much attention of researchers. The theory was then extended, and each stage of loyalty was, respectively, measured by using four observed variables [4]. Shiftan et al. [3] applied the hypothesis to the public transit and examined the relationship between the four stages of passengers' loyalty. The results indicated that it was not necessary to segment the formation of loyalty into four separate measurement models, since it could be regarded as a combination. Therefore, the measurement model assessing passengers' loyalty was employed in this paper, which reflected passengers' intention of continuing to use the bus services in the near future.

3. Data Collection and Analysis

3.1. Survey Designs and Data Preparation. According to the appropriate parameters for measuring each latent variable described above, forty observed variables were finally selected and converted into the content of the questionnaire (Table 1). Each question was set as a choice format in a five-level Likert scale, and it required the interviewee to feedback his/her view towards each question, from "disagree/dissatisfy" to "agree/satisfy." The survey was implemented in a central business district of Xiamen, China, on the 29th of July, 2017. The interviewees were selected by random sampling from their workplaces, and a total of 900 questionnaires were issued. Eventually, 664 valid questionnaires were collected with completed replies. The number of valid samples met the requirements of sample size under 95% confidence levels and 4% maximum permissible errors.

Some descriptive statistics of valid samples were addressed as shown in Table 2, which was in line with characteristics of census data in 2016.

3.2. Data Reliability. The reliability of survey data was evaluated by using the value of Cronbach's alpha, which could reflect the internal consistency of observed variables in each measurement model. Generally, if the coefficient was greater than 0.7, it could be regarded as a good construct reliability. According to the results reported in Table 3, the data reliability was considered to be acceptable to measure the unobserved variable.

3.3. Data Validity. In this paper, Kaiser-Meyer-Olkin (KMO) statistics combined with the results of Bartlett's spherical test were employed to assess the data validity. The former one took values from 0 to 1, and the closer to 1, the higher correlations

Table 1: The designed content of questionnaires in the survey.

Latent Variable	Questions in the survey/Observed variables	Notation
ENVI	(1) Do you think it is very crowded in the bus during peak-hours	X_1
	(2) Are you satisfied with the cleanness and tidy condition in the bus	X_2
	(3) Are you satisfied with temperature and odor conditions in the bus	X_3
	(4) Are you satisfied with overall conditions of facilities in the bus	X_4
	(5) Are you satisfied with overall conditions of facilities at the station	X_5
OPER	(1) Are you satisfied with the driving stability and comfort	X_6
	(2) Are you satisfied with the vehicle speed	X_7
	(3) Are you satisfied with the courtesy of the crew	X_8
	(4) Are you satisfied with the average waiting time at stations	X_9
	(5) Are you satisfied with the punctuality of vehicle at stations	X_{10}
CONVSAF	(1) Are you satisfied with the overall condition of driving safety	X_{11}
	(2) Are you satisfied with the convenience of transfers	X_{12}
	(3) Are you satisfied with the walking distance to stations	X_{13}
	(4) Are you satisfied with the frequency of encountering breakdown	X_{14}
EMOT	(1) Travelling by bus could have a positive effect on your mood	X_{15}
	(2) Do you enjoy the fun of traveling by bus	X_{16}
	(3) Do you ever used to think about shifting to another transport mode	X_{17}
	(4) Are you feeling really relax and comfortable when taking a bus	X_{18}
	(5) Are you a member of bus priority supporters	X_{19}
	(6) Are you proud to be a public transit rider	X_{20}
	(7) Are you satisfied with the living environment	X_{21}
	(8) Sometimes whether taking a bus is subject to other factors	X_{22}
	(9) The setup of routes and timetable changes are what you concerned	X_{23}
COST	(1) Do you think the fare for bus service is reasonable	X_{24}
	(2) Do you think the time cost for bus service is reasonable	X_{25}
VALU	(1) Are you satisfied with the service on the basis of the current fare	Y_1
	(2) Are you satisfied with the fare at the current level of service	Y_2
EXPE	(1) Overall expectation of bus services	X_{26}
	(2) Expectation of the efficiency of bus operations	X_{27}
	(3) Expectation of bus services that would meet personalized needs	X_{28}
SATI	(1) Do you satisfied with the bus services	Y_3
	(2) Do you think the quality of service is as you expected	Y_4
	(3) Do you think the current service quality is not far from the ideal level	Y_5
LOYA	(1) Are you sure PT will still be your first choice in future	Y_6
	(2) Are you sure PT will still be your first choice even if the fare rise	Y_7
	(3) Are you sure PT will still be the first choice even if the quality retains	Y_8
	(4) Do you think traveling by bus is very suitable for you	Y_9
	(5) Do you think PT will still be your choice even if you can afford a car	Y_{10}
	(6) Do you think the bus service quality can be comparable to that of a car	Y_{11}
	(7) Have you always had positive attitudes towards bus services	Y_{12}

Table 2: Descriptive statistics of valid samples.

Characteristics	Statistics
Gender	Male (47.7%), Female (52.3%)
Age (years)	<=20 (3.1%), 21-30 (49.6%), 31-40 (22.0%), 41-50 (12.6%), 51-60 (9.9%), ≥60 (2.8%)

Table 3: Results of survey data reliability analysis.

Unobserved variable	Number of observed variables	Cronbach's alpha
EMOT	5	0.735
OPER	5	0.755
ENVI	4	0.759
CONVSAF	9	0.801
COST	2	0.787
VALU	2	0.873
EXPE	3	0.755
SATI	3	0.731
LOYA	7	0.702

Table 4: Results of data validation analysis.

Unobserved variable	KMO statistics	Bartlett's spherical test	Contribution rate of accumulative variance
EMOT	0.823 >0.7	0.000 (p<0.001)	58.222
OPER	0.794 >0.7	0.000 (p<0.001)	57.793
ENVI	0.772 >0.7	0.000 (p<0.001)	52.235
CONVSAF	0.831 >0.7	0.000 (p<0.001)	66.980
COST	Fixed value of 0.5	0.000 (p<0.001)	57.568
VALU	Fixed value of 0.5	0.000 (p<0.001)	60.340
EXPE	0.713 >0.7	0.000 (p<0.001)	58.969
SATI	0.845 >0.7	0.000 (p<0.001)	61.665
LOYA	0.793 >0.7	0.000 (p<0.001)	42.800

Table 5: Variables that need to be removed.

Unobserved variable	Variables need to be removed	Factor load
EMOT	X_{19}	.368
	X_{20}	.126
	X_{21}	.413
	X_{22}	.341
	X_{23}	.216
ENVI	X_5	.284
CONVSAF	X_{14}	.106
EXPE	X_{28}	.285
LOYA	Y_{10}	.374
	Y_{11}	.238
	Y_{12}	-.197

between variables were. Generally, KMO statistics equal to or greater than 0.7 was considered to have a strong correlation between variables (a fixed value of 0.5 if only two variables were considered). Moreover, if the result of Bartlett's sphere test reported that the contribution rate of accumulative variance was greater than 40% and the p value was less than the significance level; this implied that the unobserved variable could be better explained by the extracted common factor. As shown in Table 4, the results indicated that the survey data satisfied all above conditions for common factor extraction, under the configuration of each measurement model in SEM. The observed variables in each measurement model were strongly correlated and could be well explained by the corresponding unobserved variables. Thus, the validity of survey data could be confirmed.

In addition, the factor load of each variable in the component matrix should generally be greater than 0.5; otherwise, it could be removed from the corresponding measurement model to improve the data validity. Therefore, the selected observed variables in each measurement model still needed to be adjusted based on the above criterion, as shown in Table 5. Then, the adjusted measurement model could be used to establish the initial SEM for assessing public transit loyalty.

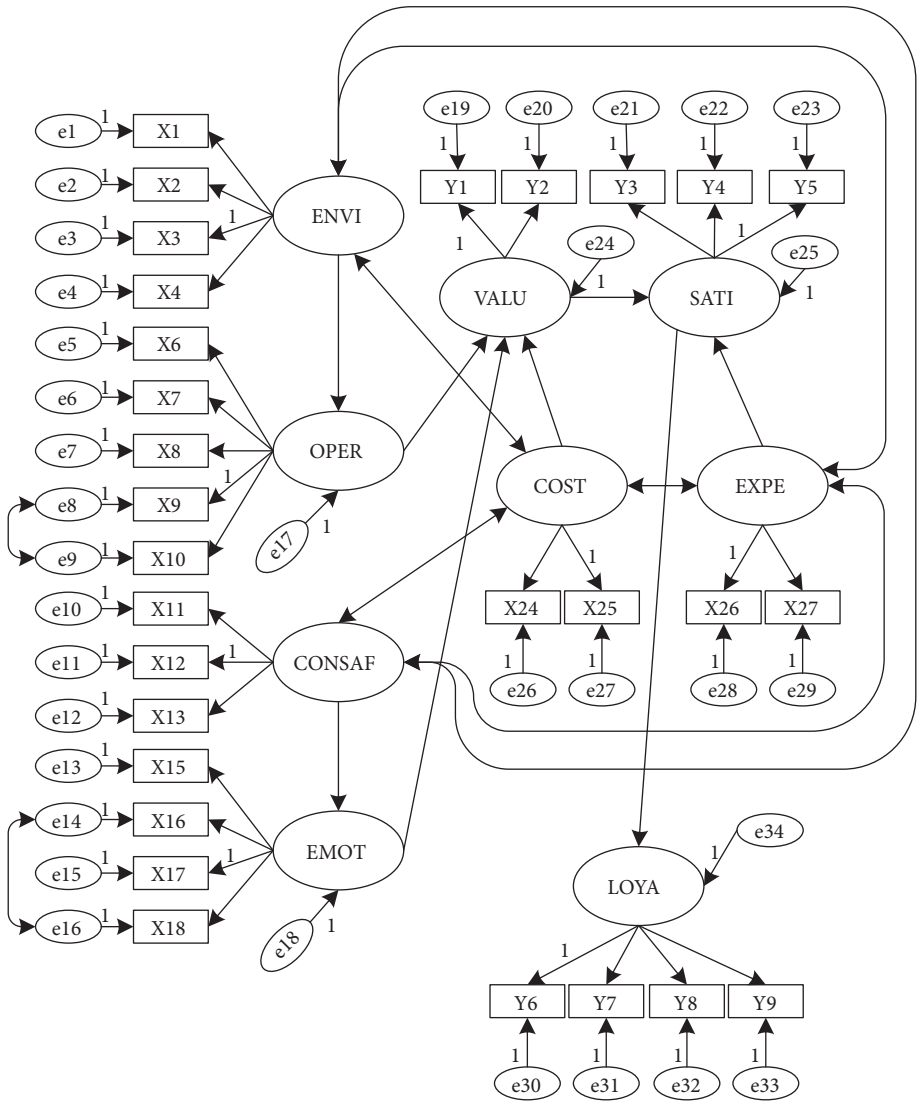

Figure 3: The initial model for assessing passengers' loyalty.

4. Findings

4.1. Modeling and Results Analysis. The initial model was built by using AMOS 21.0, as shown in Figure 3. The relationship between unobserved variables was derived from the conceptual framework proposed above, and corresponding adjusted measurement models were also adopted.

As for the goodness-of-fit of the model, five indicators were employed to assess it in the aspects of "Absolute Fitness Index," "Value-Added Fitness Index," and "Simplified Fitness Degree Index." The standard for each goodness-of-fit index was listed as shown in Table 6.

Table 6: Standards for evaluating goodness-of-fit.

Index	Goodness-of-fit standard
GFI	>0.90
RMSEA	<0.05
CMINDF	[1, 3]
CFI	>0.90
CN	>200

The path coefficients were estimated based on the survey data (Figure 4), while the estimation results indicated that the goodness-of-fit of the model was not well, since the index "GFI" was less than 0.9 not meeting with its criterion. Thus, the initial model could not be accepted and needed to be adjusted. According to the output of the path coefficients, the effect of "COST" (-0.08) on the perceived value was not significant. In addition, the correlation coefficient between "ENVI" and "CONVSAF" was very high (0.925), which implied that another higher-order common factor could be extracted by fusing the two unobserved variables.

Regarding the adjustment of the initial model, since the average travel distance in Xiamen, China, was moderate with short travel time and the fare was relatively low compared with local income, the travel time cost combined with the

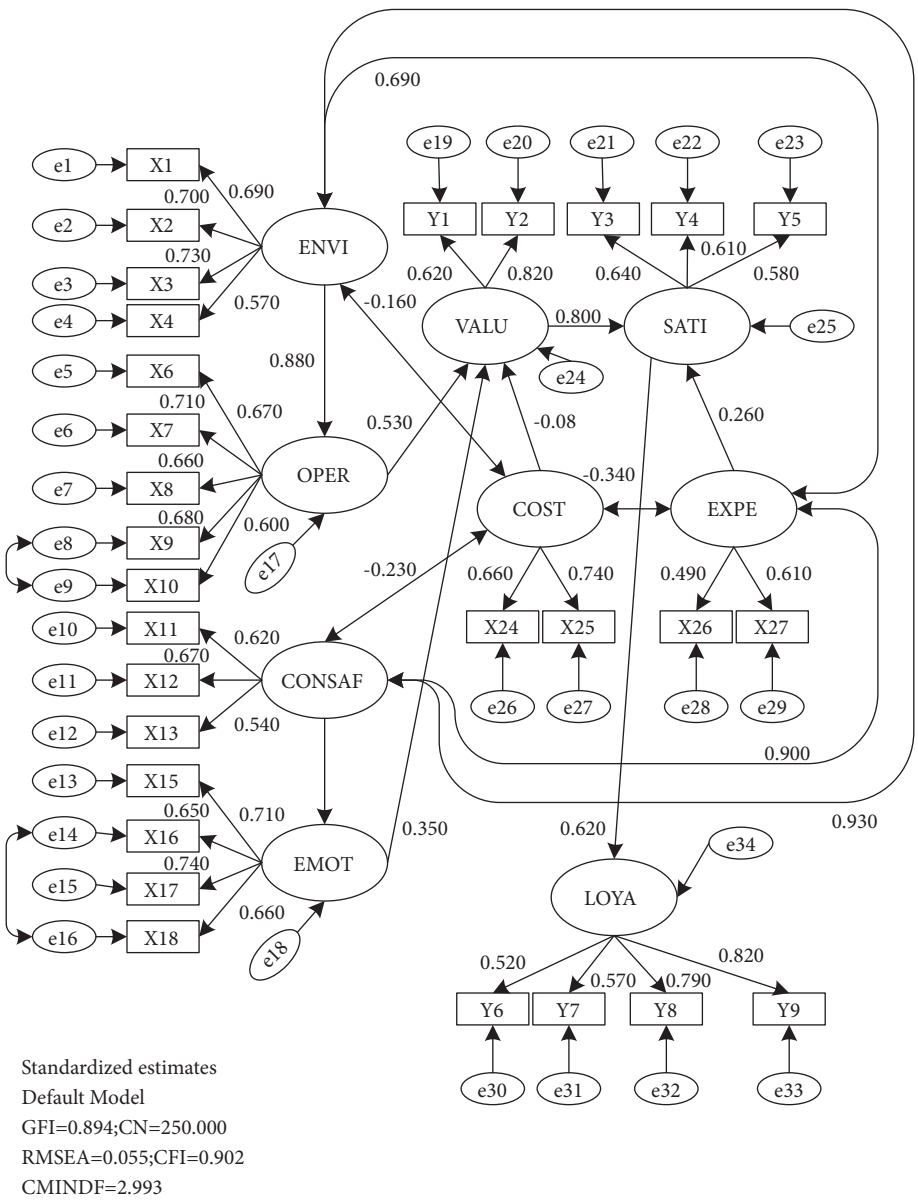

Figure 4: Results of the initial model.

monetary cost may had little effect on passengers' perception of service. Thus, the insignificant unobserved variable "COST" and its corresponding measurement model tended to be removed. Secondly, "ENVI" and "CONVSAF," which were strongly correlated, tended to be merged to extract a new common factor. Since the new factor, respectively, accounted for the travel environment, facilities, vehicle safety, and also the convenience of bus services, it could be named as "Service Guarantee" (SERGUA). The estimation results of the adjusted SEM were shown in Figure 5. The target variable "LOYA" could be well assessed, since R^2 test value was 0.672 and the goodness-of-fit indexes were fine. Thus, the adjusted model was considered to be acceptable.

4.2. The Index Score of Variables. Index score of variables could reflect the degree of interviewees' agreement or satisfaction towards the issue. The more it scored, the more passengers were satisfied with the issues reflected by the variable. Thus, it was usually adopted in marketing to improve the level of customers' satisfaction. In this study, the index score was employed to determine the direction of bus services improvement, and the formula was as following:

$$Index\ Score = \frac{\sum_{i=1}^{k} w_i \overline{x}_i - \sum_{i=1}^{k} w_i}{\sum_{i=1}^{k} w_i \left(\max\{x_i\} - \min\{x_i\}\right)} \times 100 \quad (1)$$

In the formula, each variable scored from 0 to 100 points and

w_i denoted the regression coefficient of each observed variable;

$\overline{x}_i$ denoted the mean value of the ith variable;

$\max\{x_i\}$ denoted the full score of the ith variable, namely, 5 in this study;

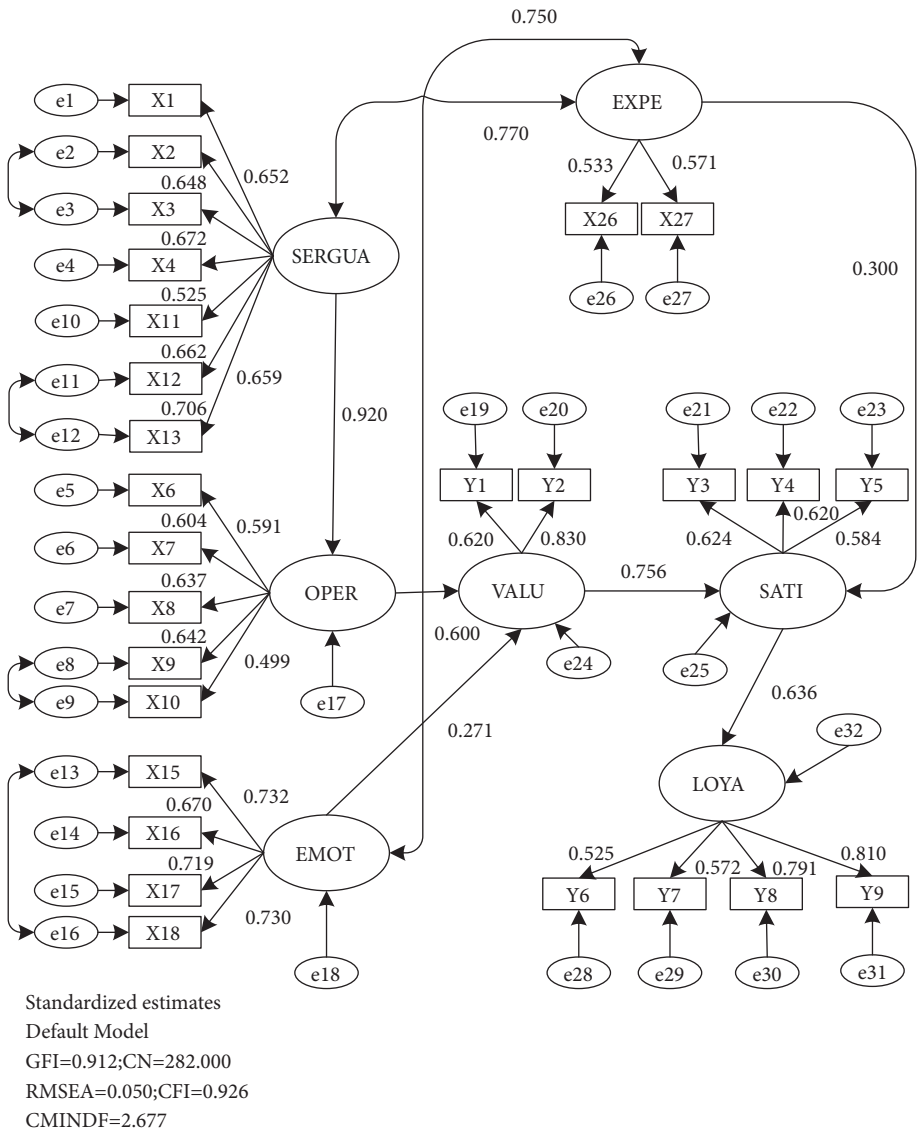

Figure 5: Results of the adjusted model.

$\min\{x_i\}$ denoted the lowest score of the ith variable, namely, 1 in this study.

Then, index score of variables was given including observed variables and corresponding unobserved variables, reported in Table 7.

4.3. Discussions. Based on the estimated path coefficients of the adjusted model and the index score of variables, some findings were discussed in the following. Firstly, "SERGUA" was found to have a very significant effect on "OPER" (0.920), as shown in Figure 5. Since "SERGUA" mostly accounted for travel environment, facility conditions, vehicle safety, the convenience of bus services, and so on, it certainly influenced the output related to the operational service and efficiency, as expected. It was also in line with the results in the related works [3, 11]. Secondly, "OPER" was considered to be the main factor (0.600) directly influencing the perceived value of passengers towards bus services. However, regarding the emotional value which reflected the degree of passengers' emotional dependence on bus services, with each unit increase of "EMOT," passengers' perceived value would be promoted by 0.271 unit. It proved the hypothesis that a long-term accumulation of emotional attitude was also a part of perceived value in addition to the utilitarian value. Thus, it was necessary to take account of how users felt about the public transit when assessing the loyalty, since the formation process of loyalty was not only dependent on the objective utilities but also affected by an accumulation of emotional attitude for a period of time. Different from the existing works, this paper concerned and confirmed the effect of passengers' emotion/impression on the service value perceived by users, enriching the literature. Moreover, passengers' perceived value (0.756) was not the only factor that affected the satisfaction directly and significantly. The results indicated that passengers' satisfaction depended on whether the value of bus services perceived by passengers

Table 7: The index scores of variables in SEM.

Unobserved variable	Observed variable	Standardized weight	Scores of observed variables	Scores of unobserved variables
VALU	Y1	0.618	59.95	56.54
	Y2	0.829	51.50	
SATI	Y3	0.624	52.68	46.20
	Y4	0.62	40.85	
	Y5	0.584	44.57	
LOYA	Y6	0.525	63.55	57.90
	Y7	0.572	58.15	
	Y8	0.791	46.40	
	Y9	0.81	61.60	
SERGUA	X1	0.652	52.70	49.75
	X2	0.648	51.95	
	X3	0.672	55.68	
	X4	0.525	37.13	
	X11	0.662	46.45	
	X12	0.706	51.85	
	X13	0.659	53.65	
OPER	X6	0.591	44.73	49.75
	X7	0.604	51.58	
	X8	0.637	53.13	
	X9	0.642	53.25	
	X10	0.499	55.00	
EMOT	X15	0.732	53.35	46.88
	X16	0.67	48.95	
	X17	0.719	47.70	
	X18	0.73	37.70	
EXPE	X26	0.533	35.20	44.74
	X27	0.571	51.43	

was as expected, which was in line with the hypothesis. Furthermore, the satisfaction had a direct effect on the public transit loyalty, which was consistent with the conception in marketing and also the results derived from other related works [3, 10–12, 22].

Regarding the index score of variables, passengers' satisfaction on public transit of Xiamen only scored less than half (46.20 points). It implied that the overall level of bus services needed to be improved, because the passengers had already shown a great dissatisfaction with the public transport system. In addition, although the passengers' satisfaction was low, the score of loyalty was actually the highest among all the unobserved variables (57.9 points). Since the public transit loyalty here was defined as the indicator reflecting continue-to-use willingness, it indicated that passengers were captive and had to keep relying on public transit in the near future, in spite of the dissatisfaction. The score related to the operational indicators reflected that the quality of bus services was still low ("SERGUA" and "OPER" were both 49.75 points). As reported in Table 7, it was necessary to focus on the core content of improving bus service quality, which were in terms of "condition of facilities in the bus," "driving stability and comfort," "vehicle speed," and "safety."

5. Conclusion

This paper addressed the public transit loyalty modeling based on SEM. As a main hypothesis, the effect of passengers' emotional value on their perception of bus services was taken into account. Specifically, for assessing the loyalty, seven unobserved variables and their corresponding relationships were eventually considered in the structural model, namely, "service guarantee," "operational services and efficiency," "emotional value," "perceived value," "expectation," "satisfaction," and "loyalty." In addition, twenty-seven observed variables were involved in the measurement models. The goodness-of-fit of the model was estimated and evaluated by using the empirical data harvested from Xiamen, China. Index score of variables was also calculated to help determine the direction of bus services improvement. The results indicated the following:

(i) Due to the short average travel distance in Xiamen, China, and the relatively low fare, the travel time cost combined with the monetary cost had little effect on passengers' perception of service.

(ii) Passengers' emotional value had a significant effect on perception value of bus services. In addition to utility value, the long-term accumulation of emotional attitude also contributed to loyalty formation.

(iii) Passengers' satisfaction towards the bus services was affected by whether users' perceived value were as expected.

(iv) The overall level of bus services needed to be improved, since the passengers had already shown a great dissatisfaction with the service. However, the score of loyalty even still retained a relatively high level. Since the public transit loyalty here was defined as the indicator reflecting continue-to-use willingness, it implied that passengers were captive and had to rely on public transit, in spite of the dissatisfaction. It could also be concluded that the cost of shifting to private motorization was still high in China, subject to economic or other factors.

(v) According to the index score of variables in the case study of Xiamen, the performances of service quality were not well, in terms of "condition of facilities in the bus," "driving stability and comfort," "vehicle speed," and "safety." The results could be used to determine the core direction of improving bus services efficiently in practice.

The model of public transit loyalty proposed in this paper could account for the internal mechanism of travel behavior and attitude, and grasp the improvement requests of passengers. In further studies, the passengers can be segmented by their spatial and temporal travel patterns or other characteristics. Multiple causality models then can be used to examine the direct and indirect factors that influenced the loyalty of respective subdivided interviewees.

Data Availability

The data supporting the results in this paper is authorized by "Transport Commission of Xiamen Municipality," and it is accessible with authorization to the database of residents' travel survey.

Conflicts of Interest

The author declares that there are no conflicts of interest in this paper.

Acknowledgments

This research is supported by "the Fundamental Research Funds for the Central Universities (3132016301)."

References

[1] B. J. Babin, W. R. Darden, and M. Griffin, "Work and/or fun: measuring hedonic and utilitarian shopping value," *Journal of Consumer Research*, vol. 20, no. 4, pp. 644–656, 1994.

[2] M. V. Sezhian, C. Muralidharan, T. Nambirajan, and S. G. Deshmukh, "Attribute-based perceptual mapping using discriminant analysis in a public sector passenger bus transport company: a case study," *Journal of Advanced Transportation*, vol. 48, no. 1, pp. 32–47, 2014.

[3] Y. Shiftan, Y. Barlach, and D. Shefer, "Measuring passenger loyalty to public transport modes," *Journal of Public Transportation*, vol. 18, no. 1, pp. 1–16, 2015.

[4] L. C. Harris and M. M. H. Goode, "The four levels of loyalty and the pivotal role of trust: A study of online service dynamics," *Journal of Retailing*, vol. 80, no. 2, pp. 139–158, 2004.

[5] J.-S. Chou and C. Kim, "A structural equation analysis of the QSL relationship with passenger riding experience on high speed rail: an empirical study of Taiwan and Korea," *Expert Systems with Applications*, vol. 36, no. 3, pp. 6945–6955, 2009.

[6] J. de Oña, R. de Oña, L. Eboli, and G. Mazzulla, "Perceived service quality in bus transit service: a structural equation approach," *Transport Policy*, vol. 29, pp. 219–226, 2013.

[7] L. dell'Olio, A. Ibeas, and P. Cecín, "Modelling user perception of bus transit quality," *Transport Policy*, vol. 17, no. 6, pp. 388–397, 2010.

[8] L. Dell'Olio, A. Ibeas, and P. Cecin, "The quality of service desired by public transport users," *Transport Policy*, vol. 18, no. 1, pp. 217–227, 2011.

[9] S. A. Figler, P. S. Sriraj, E. W. Welch, and N. Yavuz, "Customer Loyalty and Chicago, Illinois, Transit Authority Buses Results from 2008 Customer Satisfaction Survey," *Transportation Research Record*, no. 2216, pp. 148–156, 2011.

[10] P. J. Foote, D. G. Stuart, and R. Elmore-Yalch, "Exploring customer loyalty as a transit performance measure," *Transit Planning, Intermodal Facilities, and Marketing*, no. 1753, pp. 93–101, 2001.

[11] D. van Lierop and A. El-Geneidy, "Enjoying loyalty: The relationship between service quality, customer satisfaction, and behavioral intentions in public transit," *Research in Transportation Economics*, vol. 59, pp. 50–59, 2016.

[12] J. Zhao, V. Webb, and P. Shah, "Customer loyalty differences between captive and choice transit riders," *Transportation Research Record*, vol. 2415, pp. 80–88, 2014.

[13] S. Jomnonkwao and V. Ratanavaraha, "Measurement modelling of the perceived service quality of a sightseeing bus service: An application of hierarchical confirmatory factor analysis," *Transport Policy*, vol. 45, pp. 240–252, 2016.

[14] D. Susniene, "Quality approach to the sustainability of public transport," *Transport-Vilnius*, vol. 27, no. 1, pp. 102–110, 2012.

[15] S. Cafiso, A. Di Graziano, and G. Pappalardo, "Road safety issues for bus transport management," *Accident Analysis & Prevention*, vol. 60, pp. 324–333, 2013.

[16] S. Cafiso, A. Di Graziano, and G. Pappalardo, "Using the Delphi method to evaluate opinions of public transport managers on bus safety," *Safety Science*, vol. 57, pp. 254–263, 2013.

[17] M. González-Díaz and Á. Montoro-Sánchez, "Some lessons from incentive theory: Promoting quality in bus transport," *Transport Policy*, vol. 18, no. 2, pp. 299–306, 2011.

[18] Transportation Research Board, *A Hand Book for Measuring Customer Satisfaction and Service Quality*, TCRP Report, Washington, DC, USA, 1999.

[19] J. Minser and V. Webb, "Quantifying the benefits: Application of customer loyalty modeling in public transportation context," *Transportation Research Record*, no. 2144, pp. 111–120, 2010.

[20] R. Carreira, L. Patrício, R. Natal Jorge, and C. Magee, "Understanding the travel experience and its impact on attitudes, emotions and loyalty towards the transportation provider-A quantitative study with mid-distance bus trips," *Transport Policy*, vol. 31, pp. 35–46, 2014.

[21] W.-T. Lai and C.-F. Chen, "Behavioral intentions of public transit passengers-The roles of service quality, perceived value, satisfaction and involvement," *Transport Policy*, vol. 18, no. 2, pp. 318–325, 2011.

[22] R. L. Oliver, "Whence consumer loyalty?" *Journal of Marketing*, vol. 63, pp. 33–44, 1999.