Hindawi
Journal of Advanced Transportation
Volume 2018, Article ID 7498594, 10 pages
https://doi.org/10.1155/2018/7498594

Research Article

Optimization Method for Transit Signal Priority considering Multirequest under Connected Vehicle Environment

Song Xianmin, Yuan Mili, Liang Di, and Ma Lin

College of Transportation, Jilin University, Changchun, Jilin Province 130022, China

Correspondence should be addressed to Song Xianmin; songxm@jlu.edu.cn

Received 16 October 2017; Revised 11 January 2018; Accepted 12 April 2018; Published 26 June 2018

Academic Editor: Antonino Vitetta

Aiming at reducing per person delay, this paper presents an optimization method for Transit Signal Priority (TSP) considering multirequest under connected vehicle environment, which is based on the travel time prediction model. Conventional arrival time of transit depended on the detection information and the front road state, which restricted the effect of priority seriously. According to the bidirectional and real-time information transmission under connected vehicle environment, this paper establishes a more accurate forecasting model of bus travel time. Based on minimizing the total person delay at the intersection, the decision mechanism of multirequest is devised to meet the priority needs of buses with different arrival times. And the green time compensation algorithm is developed after considering the arrival information of the buses in the next cycle of compensational phase. Finally, the paper combines the COM interface of VISSIM and Matlab to achieve the proposed method under connected vehicle environment. Four control methods were tested when the VCR was 0.5, 0.7, and 0.9. The results illustrated that the proposed method reduced per person delay by 18.57%, 11.88%, and 18.96% and decreased the private vehicle delay by 3.73%, 7.62%, and 13.10%, respectively.

1. Introduction

Transit Signal Priority (TSP) is significant to alleviate traffic congestion in urban areas. Transit Signal Priority (TSP) can be divided into conventional TSP and TSP under connected vehicle environment. In order to coordinate the multidirection buses with multirequest, various strategies were developed such as the first-come-first-service, the priority under sole factor, and the priority considering multiple factors. Furth et al. pointed out that the relative priority can effectively reduce the average vehicle delay of the intersection with comparing no priority, absolute priority, and relative priority [1]. Liu et al. presented a weight model to determine the priority of the buses, and the method was based on the bus arrival time [2].

Head et al. noted that the first-come-first-service policy may not provide the best service sequence [3]. The logical framework was designed to determine transit priority level, and an optimization algorithm was formulated by minimizing total person delay. After that, Ma and Bai used the decision tree method to determine the service sequence of multiple priority requests [4]. The above methods overemphasized the reduction of the vehicle delay. However, the main purpose of TSP is to ensure punctuality and avoid the deviation from the schedule. Kim et al. considered the delay of all buses in a region, proposed a strategy under conflicting priority requests based on regional coordination, and then analyzed the impact of transit priority on the whole region [5]. A mixed-integer linear programming model based on multipriority request was proposed by He et al. [6]. Zlatkovic et al. considered the current green phase as the highest priority and proposed a transit priority method based on the new rule [7]. Ma et al. established the optimal service sequence of conflicting priority requests and the corresponding signal timing through a dynamic programming model [8]. By acquiring the information of passengers and adjusting the weight in the objective function, Christofa et al. established a person-based signal control system with TSP [9]. Xu et al. built a multiple requests decision model by considering the per person delay and the waiting time of passengers at bus station [10]. After considering the randomness of the bus arrival time, Zeng et al. developed a stochastic mixed-integer

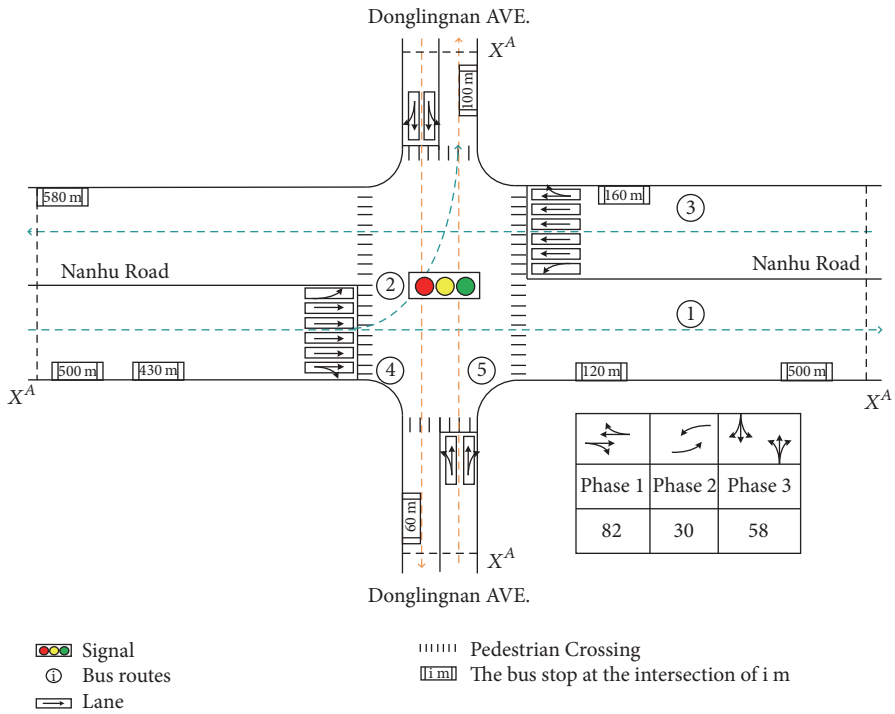

Figure 1: Layout of the intersection.

nonlinear programming (SMINP) to find the optimal green time for real-time TSP control [11].

With the development of connected vehicles, Transit Signal Priority (TSP) has aroused the attention to scholars. The information about speed, position, direction, acceleration, and so on is transferred between vehicle and vehicle under connected vehicle environment. Owing to this feature, it is possible to predict the travel time accurately. More importantly, both the transit delay and the private vehicle delay can be taken into account. He et al. proposed a multimodal signal control called PAMSCOD in connected vehicle environment and used the powerful optimization solver to solve complex optimization problems [12]. In order to ensure the accuracy of the bus arrival time and minimize the adverse effects on the general traffic, a new priority sequence between the two successive stations was proposed by Hao et al. [13]. To resolve conflicting priority requests among social vehicles, pedestrians, buses, and emergency vehicles, Zamanipour et al. designed a priority decision framework with multiple models under connected vehicle environment and used the weights of all kinds of vehicles as the basis for determining the priority decision [14]. He et al. formulated a mixed-integer linear program (MILP) under multirequest which explicitly accommodated multiple priority requests from different modes of vehicles and pedestrians while simultaneously considering coordination and vehicle actuation [15]. In the premise of not increasing the green time, Hu et al. established a transit priority algorithm under connected vehicle which aimed at minimizing total delays [16–18]. Wu et al. developed the speed guidance model and the signal priority control model under CV environment. Different control strategies were adopted for delayed buses and buses ahead of schedule [19].

Our work focuses on developing the decision mechanism of multirequest and the green time compensation algorithm based on minimizing total person delay at the intersection. In order to meet the priority needs of multibuses with different arrival times, the decision mechanism of multirequest is established. And the green time compensation algorithm is developed after considering the arrival times of the buses in the next cycle of compensational phase.

The rest of this paper is organized as follows. Section 2 shows the logical framework of the proposed method. Section 3 elaborates the signal control strategy. In Section 4, an optimization method for Transit Signal Priority (TSP) considering multirequest under connected vehicle environment is put forward, which is based on the travel time prediction model. Meanwhile, the decision mechanism of multirequest and the green time compensation algorithm are established by minimizing person delay at the intersection. In Section 5, four priority control methods are tested by using the COM interface of VISSIM simulation platform and Matlab.

2. Logical Framework

As shown in Figure 1, the road is under connected vehicle environment. The information is transferred among vehicles, as well as vehicles and infrastructures. The TSP mechanism starts when the buses arrive at the section X^A of the road. The buses are detected by the infrastructure next to the bus station when buses get to the bus station upstream. The time to reach the stop line is real-time predicted. And the corresponding TSP the green time is calculated in the process of driving. Taking into account the arrival time of all buses and general vehicles on the road, the optimal timing plan is generated.

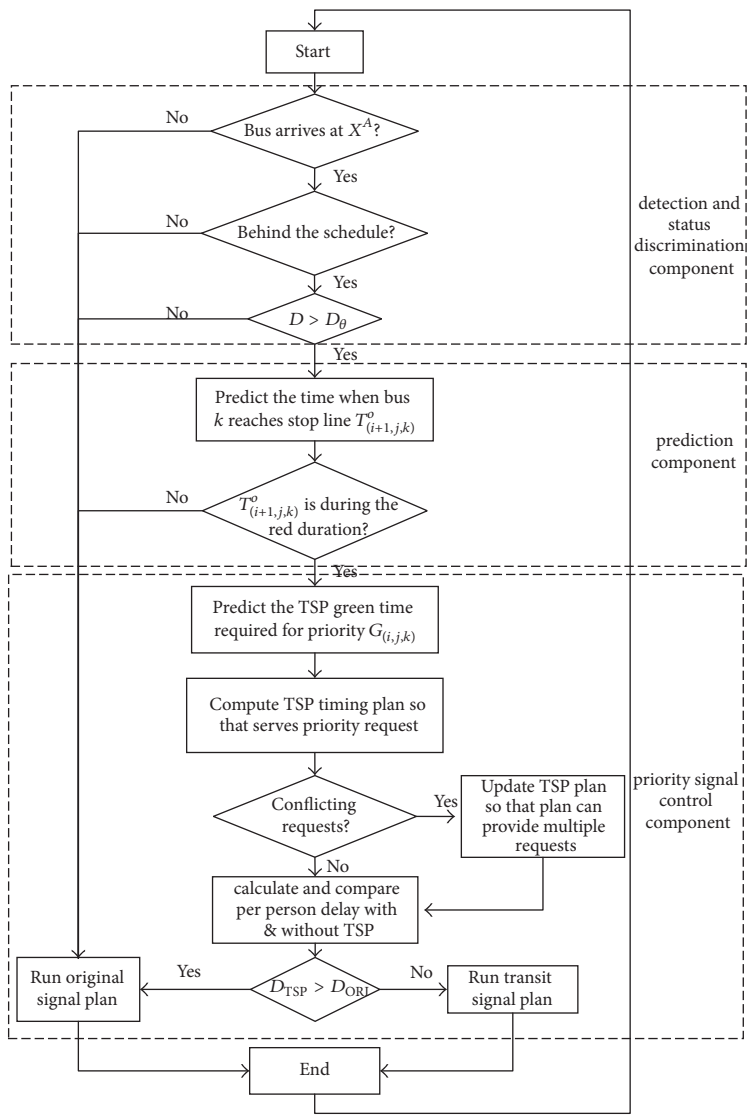

Figure 2: Logical framework.

In this study, a Transit Signal Priority method with the multiple requests under connected vehicle environment consists of three components: the detection and status discrimination component, the prediction component, and the priority signal control component. The logical framework is shown in Figure 2.

3. Signal Control Strategy

The signal controller obtains multiple priority requests simultaneously at a signalized intersection under connected vehicle environment. In this paper, four different signal control strategies are discussed in this section: NTSP, CVTSP, CVTSP-GD, and CVTSP-CC. NTSP indicates that the intersection adopts the original signal timing, and it is nonpriority timing plan. The control strategy of Transit Signal Priority under connected vehicle (CVTSP) was proposed by He et al. [12]: for the sake of serving the conflicting requests of multidirectional buses, the optimal signal timing plan is generated by minimizing the total delay at the intersection. However, the green time will be not compensated in the next cycle. The green time reallocation strategy (CVTSP-GD) is to insert the green time in the first cycle to make sure the buses priority requests are served, and the green time is reallocated in the next cycle to keep the total green time in two cycles the same. Aiming at minimizing total person delay at the intersection, an optimization method for Transit Signal Priority considering multirequest under connected vehicle environment is presented, which also implies the green time compensation algorithm. The central idea of CVTSP-CC is to insert the TSP green time in a cycle to provide buses priority. Considering arrival information about transit in the competition direction, the green time is inserted into the appropriate position of the competitive phase in the next cycle, and the optimal signal timing plan for the next cycle is generated.

This section takes a three-phase signalized intersection as an example to explain these four strategies in Figure 3. The original plan is shown in Figure 3(a). Buses A, B, C, D, E, and

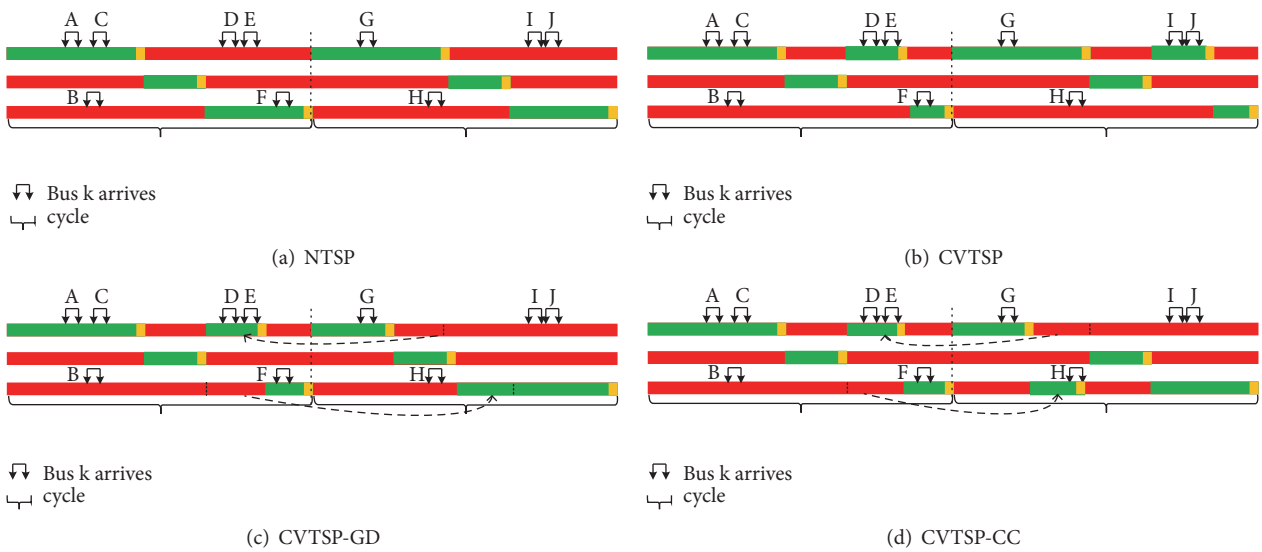

Figure 3: Timing plans for NTSP, CVTSP, CVTSP-GD, and CVTSP-CC.

F arrive at the intersection at the first cycle, and buses G, H, I, and J arrive at the second cycle. According to the total person delay, the controller decides that buses D and E and buses I and J acquire signal priority at the first cycle and second cycle, respectively, and the timing plan is showed in Figure 3(b). CVTSP-GD is shown in Figure 3(c). After serving requests for bus D and E in the first cycle, green time is reallocated in the second cycle. As a result, green time of the third phase is extended. CVTSP-CC is as illustrated in Figure 3(d). Bus H priority request is served after calculating the total person delay for giving priority to bus H. The green time occupied by the first phase in the first cycle is compensated for the time when bus H arrives at the intersection. It can guarantee the priority of buses in all directions without compromising the interests of private vehicles.

The goal of this strategy is not to meet priority requests to all buses, because the priority requests from different directions conflict with each other and cannot be met simultaneously. When the buses call for requests priority, the total delay of the intersection can be calculated by the algorithm, and the plan which owns the least delay will be chosen. This plan can meet one or more bus priority requests in one phase.

4. Algorithm

4.1. Assumption. The following assumptions need to be created in the sake of establishing a method for Transit Signal Priority considering multirequest under connected vehicle environment:

(1) The entire road is under connected vehicle environment and the information is transferred between vehicles and vehicles, vehicles and infrastructures.

(2) The original signal timing plan is reasonable, and it can effectively allocate the traffic rights of vehicles in all directions.

4.2. Notation. To illustrate the description of the proposed model, the summary of the model notation is presented in Notations.

4.3. Detection and Status Discrimination Component. When the buses get to the section X^A, Transit Signal Priority mechanism begins to work. If a bus passes X^A during a signal cycle, we mark that ψ is equal to 1, namely, $\psi = 1$; otherwise $\psi = 0$. In this component, it is necessary to distinguish whether the bus $k$deviates from the schedule. If the bus is on schedule, the signal controller runs the original signal plan. If the bus deviates from schedule and the delay is greater than the acceptable delay, the signal controller should determine whether to provide the bus k priority according to the actual situation.

4.4. Prediction Component. This part takes a three-phase signalized intersection as an example to describe the prediction algorithm. When the first bus passes through the stop line, the green phase is presented as $j = 1$. According to the order of the green phase, the other phases are defined as $j = 2$, $j = 3$. The mechanism defines the beginning of the cycle as t_0 and the time when the bus k arrives the section X^A as $T^A_{(i,j,k)}$. In the prediction component, the mechanism needs to predict the time when the bus k arrives at the end of the queue, the time when the bus k starts again $T^{B'}_{(i+1,j,k)}$, and the time when the bus k reaches the stop line $T^O_{(i+1,j,k)}$.

4.4.1. The Time When the Bus k Arrives at the End of the Queue. If the bus k arrives at the intersection in the red time of phase j for cycle i, the system starts to predict the location of the bus k when it arrives at the end of the queue according to the number of vehicles before the bus k. As shown in Figure 5, if the bus k arrives at the intersection in the green time phase

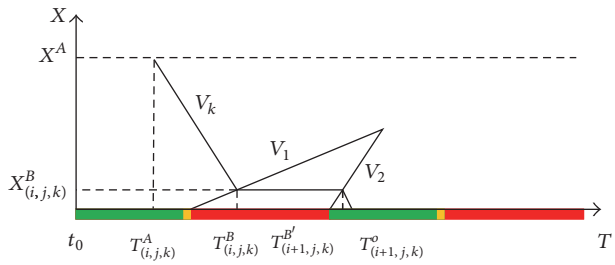

Figure 4: Space-time map.

j for cycle i, not all vehicles between the bus k and the stop line will line up. If P vehicles before the bus k meet $g^s_{(i,j)} \le X_{(i,j,k,P)}/V_{(k,P)} \le g^e_{(i,j)}$ and $P+1$ vehicles before the bus k meet $X_{(j,k,P+1)}/V_{(k,P)} > g^e_{(i,j)}$, there will be P vehicles in line. The position where the bus k arrives at the end of the queue is

$$X^B_{(i,j,k)} = \begin{cases} \sum_{p=1}^{N_A} L_p & g^s_{(i,j)} \le T^A_{(i,j,k)} \le g^e_{(i,j)} \\ \sum_{p=1}^{P} L_p & T^A_{(i,j,k)} < g^s_{(i,j)} \text{ or } T^A_{(i,j,k)} > g^e_{(i,j)}. \end{cases} \tag{1}$$

The time when the bus k arrives at the end of the queue is

$$T^B_{(i,j,k)} = \frac{X^A - X^B_{(i,j,k)}}{v_k} + T^A_{(i,j,k)}. \tag{2}$$

4.4.2. The Time When the Bus k Starts Again. When red time for phase p during cycle k begins, the vehicles line up. Define velocity of queue wave at this time as V_1. The queue begins to dissipate when the green time starts, and speed of discharging shockwave is V_2. The bus k starts up when discharging shockwave is transmitted to the bus k, and the time is

$$T^{B'}_{(i+1,j,k)} = \frac{X^B_{(i,j,k)}}{V_2} + i \cdot C + t_0. \tag{3}$$

4.4.3. The Time When the Bus k Reaches the Stop Line. After the bus k starts, it continues to drive at the speed of V_k. The time when the bus k reaches the stop line is

$$T^O_{(i+1,j,k)} = \frac{X^B_{(i,j,k)}}{V_2} + i \cdot C + \frac{X^B_{(i,j,k)}}{V_k} + t_0. \tag{4}$$

4.5. Priority Signal Control Component. In this component, the TSP signal plan is calculated to serve priority to buses. The bus which gain priority can pass through the intersection unimpeded and would not be stopped by the queue.

4.5.1. The Green Time Required for Multiple Requests. As shown in Figure 4, queue of vehicles should be dissipated before the bus k reaches the end of the queue, so the green time required to serve a single transit priority request is

$$\begin{aligned} G^s_{(i,j,k)} &= T^B_{(i,j,k)} - \frac{X^B_{(i,j,k)}}{V_2} \\ &= \frac{X^A - X^B_{(i,j,k)}}{V_k} + T^A_{(i,j,k)} - \frac{X^B_{(i,j,k)}}{V_2} \\ G^e_{(i,j,k)} &= T^A_{(i,j,k)} + \frac{X^A}{V_k} \\ G_{(i,j,k)} &= \frac{X^B_{(i,j,k)}}{V_k} + \frac{X^B_{(i,j,k)}}{V_2}. \end{aligned} \tag{5}$$

On the basis of calculating the green time required for giving the bus k priority, the green time required for the N buses is calculated. The buses in the same phase are reordered as $k', \ldots, k^n$. And the green time required to provide the requests for N buses headed by the bus k is solved by iterative method.

Step 1 ($N = 1$)

$$\begin{aligned} G^s_{(i,j,k)}(1) &= G^s_{(i,j,k)} \\ G^e_{(i,j,k)}(1) &= G^e_{(i,j,k)} \\ G_{(i,j,k)}(1) &= G_k. \end{aligned} \tag{6}$$

Step 2 ($N = N + 1$)

$$\begin{aligned} G^s_{(i,j,k)}(N) &= \min\left\{G^s_{(i,j,k)}(N-1), G^s_{(i,j,k^N)}\right\} \\ G^e_{(i,j,k)}(N) &= \max\left\{G^e_{(i,j,k)}(N-1), G^e_{(i,j,k^N)}\right\} \\ G_{(i,j,k)}(N) &= G^e_{(i,j,k)}(N) - G^s_{(i,j,k)}(N). \end{aligned} \tag{7}$$

Step 3. If $N = n$, the iteration ends.

4.5.2. Signal Timing Plan. Three control strategies are adopted to avoid the green time diffuse, which are green extension, red truncation, and green insertion. When $G^s_{(i,j,k)}(N) - g^e_{(i,j)} \le \theta_1$, green extension is adopted; when $r^e_{(i,j)} - G^s_{(i,j,k)}(N) \le \theta_2$, red truncation is adopted, or green insertion is adopted. The

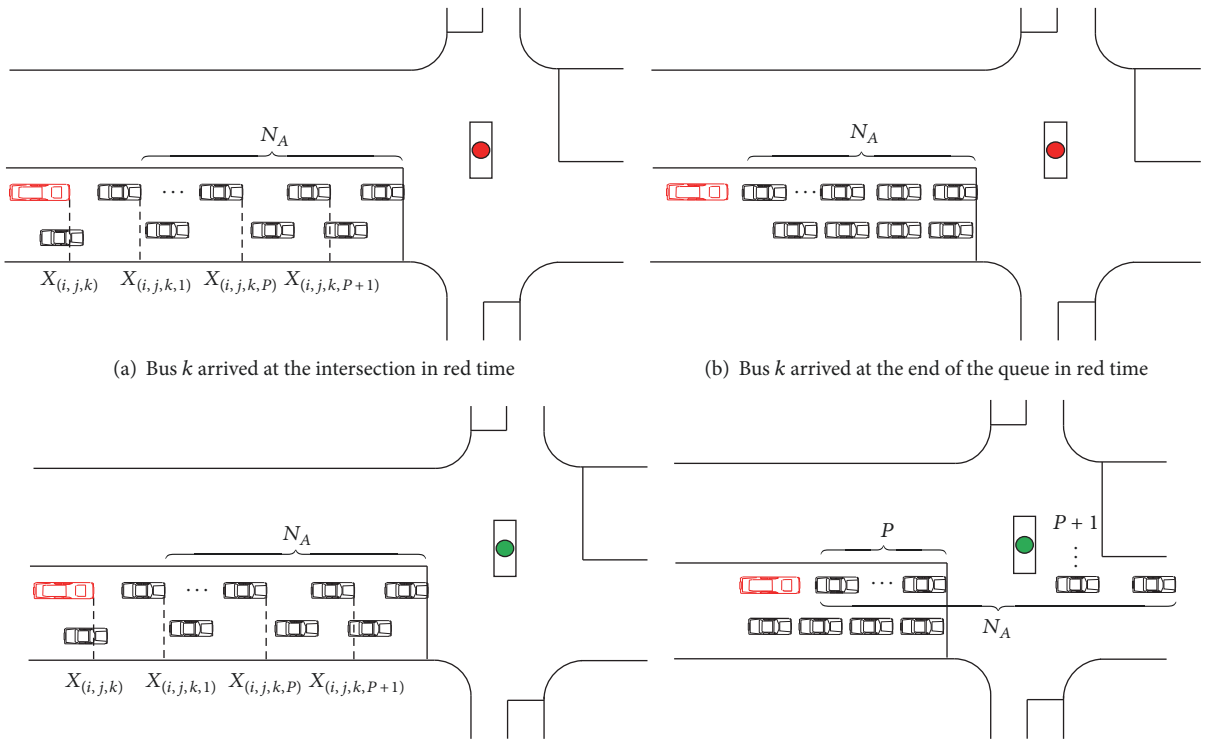

(a) Bus k arrived at the intersection in red time

(b) Bus k arrived at the end of the queue in red time

(c) Bus k arrived at the intersection in green time

(d) Bus k arrived at the end of the queue in green time

FIGURE 5: Four situations for bus K getting to the stop line.

start and end moments of the new TSP the green time are as follows:

$$\begin{aligned} &G^{(s,\text{new})}_{(i,j,k)}(N) \\ &= \begin{cases} g^e_{(i,j)} & G^s_{(i,j,k)}(N) - g^e_{(i,j)} \le \theta_1 \\ G^s_{(i,j,k)}(N) & G^s_{(i,j,k)}(N) - g^e_{(i,j)} > \theta_1,\ r^e_{(i,j)} - G^s_{(i,j,k)}(N) > \theta_2 \\ G^s_{(i,j,k)}(N) & r^e_{(i,j)} - G^s_{(i,j,k)}(N) \le \theta_2 \end{cases} \\ &G^{(e,\text{new})}_{(i,j,k)}(N) \\ &= \begin{cases} G^e_{(i,j,k)}(N) & G^s_{(i,j,k)}(N) - g^e_{(i,j)} \le \theta_1 \\ G^e_{(i,j,k)}(N) & G^s_{(i,j,k)}(N) - g^e_{(i,j)} > \theta_1,\ r^e_{(i,j)} - G^s_{(i,j,k)}(N) > \theta_2 \\ r^e_{(i,j)} & r^e_{(i,j)} - G^s_{(i,j,k)}(N) \le \theta_2. \end{cases} \end{aligned} \tag{8}$$

TSP green time is inserted in the phase j when phase j' is green duration originally, so phase j' should be inserted into a red time whose length is equal as TSP green time.

$$\begin{aligned} R^s_{(i,j')} &= G^{(s,\text{new})}_{(i,j,k)}(N) \\ R^e_{(i,j')} &= G^{(e,\text{new})}_{(i,j,k)}(N). \end{aligned} \tag{9}$$

In order to obtain the optimal signal plan, a mixed-integer linear programming equation based on the minimum total delays of intersection is proposed to get the optimal TSP green time. The objective function is set as

$$\text{Minimize} \quad \left\{ \sum_m D_m \cdot \text{Occ}_m + \sum_k D_k \cdot \text{Occ}_k \right\}. \tag{10}$$

The constraint equation is

$$\begin{aligned} G^{\text{new}}_{(i,j,k)} &\ge G_{\min} \\ G^{\text{new}}_{(i,j,k)} &\le G_{\max}. \end{aligned} \tag{11}$$

4.5.3. Compensation Signal Plan. As shown in Figure 3, the adopted mechanism is the way to compensate the green time for the occupied phase in the next cycle if the green time is occupied in the previous cycle. The green time which meets the priority needs of buses with different arrival times is inserted to the previous cycle, which is based on minimizing the total person delay at the intersection. And the compensational green time is inserted to the next cycle after considering the arrival information of the buses of the compensational phase. The length of the green time occupied in the previous cycle is equal to the green time compensated in the next period, which means that the total green times and the total red times of each phase in the two cycles are equal. It also represents that the length of each cycle is the same.

For compensating the green time, the time when buses arrive at the intersection in phase j' and the green time required for priority will be predicted. If there is no bus at the intersection in phase j' of cycle $i+1$, then the signal plan of cycle $i+1$ meets

$$g_{(i,j)} + G^{\text{new}}_{(i,j,k)} = g_{(i+1,j)} - G^{\text{final}}_{(i+1,j',k')}. \tag{12}$$

Table 1: Traffic volumes at the intersection.

V/C		LT (veh)	TH (veh)	RT (veh)	LT (bus)	TH (bus)	RT (bus)
0.5	EB	270	1356	124	4	26	10
	WB	170	1294	61	NA	26	NA
	SB	35	525	140	NA	6	4
	NB	182	490	196	10	6	NA
0.7	EB	279	2120	100	4	26	10
	WB	165	1823	110	NA	26	NA
	SB	46	593	250	NA	6	4
	NB	205	579	194	10	6	NA
0.9	EB	254	2904	699	4	26	10
	WB	191	2312	381	NA	26	NA
	SB	56	672	315	NA	6	4
	NB	296	678	487	10	6	NA

If there is a bus to the intersection in phase j' of cycle $i+1$, then the signal plan of cycle $i+1$ meets

$$G^{(s,\text{com})}_{(i+1,j',k')} = \begin{cases} G^{(s,\text{new})}_{(i+1,j',k')} & G^{\text{new}}_{(i+1,j',k')} \le G^{\text{new}}_{(i,j,k)} \\ G^{(e,\text{new})}_{(i+1,j',k')} - G^{\text{new}}_{(i+1,j',k')} & G^{\text{new}}_{(i+1,j',k')} > G^{\text{new}}_{(i,j,k)} \end{cases} \quad (13)$$

$$G^{(e,\text{com})}_{(i+1,j',k')} = G^{(e,\text{new})}_{(i+1,j',k')}.$$

After obtaining the compensation signal plan by (12) and (13), the compensational signal plan which owns the minimum total delay will be selected according to (10) and (11).

5. Simulation Evaluation

5.1. Study Site. An intersection in Changchun City, China, is selected to evaluate the performance of the proposed model. The layout of the intersection and the information of signal timing plan are shown in Figure 1. Traffic volumes of Nanhu Road and Donglingnan Street were investigated in April 25th, 26, and the traffic volumes are shown in Table 1.

5.2. Simulation Results

5.2.1. Simulation Background. In this paper, the COM interface of VISSIM simulation software was used to simulate connected vehicle environment. A simulation model was set up in VISSIM simulation software according to the actual intersection of Nanhu Road and Donglingnan Avenue. The COM interface can control the experiment process and get real-time data after the simulation starts. The real-time information of vehicles, including the location, speed, direction, passenger capacity, and simulation time, can be predicted at the time when the buses arrive at the intersection. Then the optimal signal timing plan is obtained.

The intersection was simulated under three traffic conditions: $V/C = 0.5$, $V/C = 0.7$, and $V/C = 0.9$. The speed limit on the road was 40 mph and each simulation runs 17 cycles. When the VCR was 0.5, 0.7, and 0.9, four signal control strategies were tested, respectively. The first strategy was no priority (NTSP), and the intersection runs the original signal timing plan. The second strategy used the Transit Signal Priority under connected vehicle environment (CVTSP) for each cycle and did not take any compensation during the next cycle. The third strategy (CVTSP-GD) was to serve the requests of buses by CVTSP in the first cycle and distribute the green time in the second cycle based on the signal plan information of the first cycle. The fourth strategy (CVTSP-CC) was to adopt CVTSP in the first cycle, and the green time was compensated in the next cycle by considering the transit arrival time of the competitive direction.

5.2.2. Results Analysis. In this experiment, four kinds of signal control methods were tested under three different traffic conditions: NTSP, CVTSP, CVTSP-GD, and CVTSP-CC. The results are shown in Table 2. Per person delay is used to evaluate the effect of four methods. In addition, compared with the original signal control strategy, the improvement in average private vehicle delay, average bus delay, and average per person delay of three other strategies is shown in Table 2.

It can be seen from Table 2 that average private vehicle delay in the CVTSP increases slightly compared with the NTSP when VCR is 0.5. This is because the CVTSP serves priority to buses at the intersection in each cycle, causing additional delay in private vehicle, which is also the reason why the bus delay is significantly lower than before. In contrast to this, private vehicle delay in CVTSP-GD is almost the same as NTSP owing to the reallocation of the green time. Yet the effect of reducing bus delay in CVTSP-GD is worse than that of CVTSP. As can be seen from the results of the CVTSP-CC, the delay of private vehicles is slightly reduced and the bus delay is decreased by 20.20 seconds. This demonstrates that compensation strategy adopted by CVTSP-CC can reduce the bus delay as much as possible without producing the additional delay in private vehicle and the result is reducing per person delay at the whole intersection. The delay with the saturation of 0.7 is similar to that of 0.5, indicating that the proposed method for transit priority control is also applied perfectly. When V/C is 0.9,

Table 2: The results of four strategies.

V/C	Strategy	NTSP	CVTSP	CVTSP-GD	CVTSP-CC	Percent change		
						CVTSP	CVTSP-GD	CVTSP-CC
0.5	Private vehicle delay (s)	36.66	38.81	36.41	35.29	5.86%	−0.68%	−3.74%
	Bus delay(s)	44.20	27.40	32.74	20.20	−38.01%	−25.93%	−54.30%
	Per person delay (s)	38.61	35.81	35.44	31.44	−7.25%	−8.21%	−18.57%
0.7	Private vehicle delay (s)	46.79	49.28	46.82	43.22	5.32%	0.06%	−7.62%
	Bus delay(s)	46.19	23.71	37.26	18.45	−48.67%	−19.33%	−60.06%
	Per person delay (s)	47.33	47.41	46.36	41.70	0.17%	−2.05%	−11.88%
0.9	Private vehicle delay (s)	56.01	53.43	53.57	48.67	−4.61%	−4.36%	−13.10%
	Bus delay(s)	51.50	34.09	44.56	29.64	−33.81%	−13.48%	−42.44%
	Per person delay(s)	54.57	48.8	50.97	44.22	−10.57%	−6.60%	−18.97%

private vehicle delay of CVTSP, CVTSP-GD, and CVTSP-CC decreased slightly compared with NTSP. The bus delay of CVTSP is reduced to 34.09 seconds, while CVTSP-GD and CVTSP-CC are 44.56 seconds and 29.64 seconds, respectively. The above shows that when the road is congested, the optimization method for Transit Signal Priority considering multirequest under connected vehicle environment still can effectively reduce the average delay of the intersection.

From Table 2, it is possible to more clearly compare the effects of the above three control strategies on the per passenger delay of private vehicles, per passenger delay of buses and the per person delay of the intersection. CVTSP-CC can provide public transport priority. Compared with the original signal plan, the bus delay of CVTSP-CC is decreased by 54.31%. CVTSP-CC has a significant effect on reducing bus delay compared to 38.00% reduction in CVTSP and 25.92% in CVTSP-GD. It is worth mentioning that because of compensating for the green time in the next cycle, per person delay is decreased by 18.57% in CVTSP-CC, and private vehicle delay is decreased by 3.73% as well. Similarly, when saturation is 0.7, CVTSP-CC improves per private vehicle delay by 7.62%, per bus delay by 42.44%, and per person delay by 11.88%. It illustrates that proposed method is also applicable to the saturation of 0.7. When saturation is higher (i.e., 0.9), these three control strategies reduce private vehicle delay by 4.60%, 4.35%, and 13.10%. At the same time, bus delay is reduced by 33.81%, 13.48%, and 42.44%, respectively, and per person delay is decreased by 10.57%, 6.59%, and 18.96%. To summarize, CVTSP-CC is beneficial for reducing per person delay at the intersection, especially for reducing bus delay. Both CVTSP and CVTSP-CC can reduce the per person delay of bus passengers significantly. However, CVTSP may increase the per person delay of private vehicles slightly. CVTSP-CC reduced the per person delay by 18.57%, 11.88%, and 18.97% under three conditions, respectively, which is much smaller than the other three signal control methods.

6. Conclusions

An optimization method for Transit Signal Priority (TSP) considering multirequest under connected vehicle environment is presented in this paper. This method devotes to solving the conflicting requests of multidirectional buses with different arrival times and brings out transit priority in the premise of minimizing per person delay at the intersection. The central idea of this method is to gain the optimal TSP signal timing plan to serve buses priority in a mixed-integer linear program. Considering buses arrival information of the competitive direction, the green time is inserted into the appropriate position of the compensational phase in the next cycle. The paper designs a kind of green compensation method which meets the requirement of minimizing per person delay at the intersection. Based on the COM interface of VISSIM simulation platform, this paper simulated and evaluated the proposed method. The result shows that the proposed method can reduce the delay of the intersection more effectively than the other three signal control strategies. In the case of the VCR is 0.5. This proposed method reduced per person delay by 18.57%, with 54.31% reduction in per bus passenger delay and 3.73% reduction in per private vehicle delay. When the VCR on the arterial is 0.7, per person delay, per bus delay, and per private vehicle delay were reduced by 11.88%, 42.44%, and 7.62%, respectively. When the VCR on the arterial is 0.9, per person delay, per bus delay, and per private vehicle delay were reduced by 18.96%, 60.06%, and 13.10%, respectively. CVTSP-CC can reduce per person delay of buses significantly, while taking into account the per person delay of private vehicles.

Notations

X^A: Distance between the bus k and the front stop line when the mechanism is activated (m)

$X^B_{(i,j,k)}$: The position where the bus k arrives at the end of the queue in phase j for cycle i (s)

t_0: The beginning of the cycle (s)

$T^A_{(i,j,k)}$: The time when the bus k arrives at X^A in phase j for cycle i (s)

$T^B_{(i,j,k)}$: The time when the bus k arrives at the end of queue in phase j for cycle i (s)

$T^{B'}_{(i+1,j,k)}$: The time when the bus k starts again from the end of queue in phase j for cycle i (s)

$T^O_{(i+1,j,k)}$: The time when the bus k arrives at the stop line in phase j for cycle i (s)

N_A: The number of vehicles between the bus and the stop line

$G^s_{(i,j,k)}$: Start time of TSP the green time required for the bus k in phase j for cycle i (s)
$G^e_{(i,j,k)}$: End time of TSP the green time required for the bus k in phase j for cycle i (s)
$G_{(i,j,k)}$: The length of TSP the green time (s)
D_m: Delay of private vehicle m (s)
D_k: Delay of the bus k (s)
i: Defined cycles
j: Defined phases
$r^s_{(i,j)}$: Start time of red time in original signal plan in phase j for cycle i
$r^e_{(i,j)}$: End time of red time in original signal plan in phase j for cycle i
$X^B_{(i,j,k,p)}$: Distance between the p vehicle in front of the bus k and the stop line (m)
$g^s_{(i,j)}$: Start time of the green time in original signal plan in phase j for cycle i
$g^e_{(i,j)}$: End time of the green time in original signal plan in phase j for cycle i
$G^{(s,\text{new})}_{(i,j,k)}$: Start time of TSP the green time required for the bus k after adjustment in phase j for cycle i
$G^{(e,\text{new})}_{(i,j,k)}$: End time of TSP the green time required for the bus k after adjustment in phase j for cycle i
$G^{\text{new}}_{(i,j,k)}$: Duration of TSP the green time after adjustment (s)
$G^{(s,\text{com})}_{(i+1,j',k')}$: Start time of TSP the green time compensate for the bus k' in phase j' for cycle $i+1$ (s)
$G^{(e,\text{com})}_{(i+1,j',k')}$: End time of TSP the green time compensate for the bus k' in phase j' for cycle $i+1$ (s)
$G^{\text{com}}_{(i+1,j',k')}$: Duration of compensate for the bus k' in phase j' for cycle $i+1$ (s)
Occ_k: Number of passengers in the bus k
$G^s_{(i,j,k)}(N)$: Start time of TSP the green time for providing N buses priority in phase j for cycle i (s)
$G^e_{(i,j,k)}(N)$: End time of TSP the green time for providing N buses priority in phase j for cycle i (s)
$G_{(i,j,k)}(N)$: Duration of TSP the green time for providing N buses priority in phase j for cycle i (s)
$R^s_{(i,j')}$: Start time of red time inserted in phase j for cycle i (s)
$R^e_{(i,j')}$: End time of red time inserted in phase j for cycle i (s)
ψ: Bus detection coefficient, if there is a bus arrives, $\psi = 1$; otherwise $\psi = 0$.

Conflicts of Interest

The authors declare that there are no conflicts of interest regarding the publication of this paper.

References

[1] P. G. Furth, T. H. J. Muller et al., "Conditional bus priority at signalized intersections - Better service with less traffic disruption," in *Transit: Bus Transit And Maintenance; Rural; Paratransit; Technology; Capacity And Quality Of Service: Public Transit*, Transportation Research Board Natl Research Council, pp. 23–30, Transportation Research Record-Series, Washington D.C, USA, 2000.

[2] H. Liu, A. Skabardonis, and W-B. Zhang, *A Dynamic Model for Adaptive Bus Signal Priority*, University of California B, California Department of T, 2003.

[3] L. Head, D. Gettman, and Z. Wei, "Decision Model for Priority Control of Traffic Signals," *Transportation Research Record*, vol. 1978, pp. 169–177, 2006.

[4] W. Ma and Y. Bai, "Serve Sequence Optimization Approach for Multiple Bus Priority Requests Based on Decision Tree," in *Proceedings of the Seventh International Conference of Chinese Transportation Professionals Congress (ICCTP)*, pp. 605–615, Shanghai, China.

[5] S. Kim, M. Park, and K. S. Chon, "Bus signal priority strategies for Multi-directional bus routes," *KSCE Journal of Civil Engineering*, vol. 16, no. 5, pp. 855–861, 2012.

[6] Q. He, K. L. Head, and J. Ding, "Heuristic algorithm for priority traffic signal control," *Transportation Research Record*, no. 2259, pp. 1–7, 2011.

[7] M. Zlatkovic, A. Stevanovic, and P. T. Martin, "Development and evaluation of algorithm for resolution of conflicting transit signal priority requests," *Transportation Research Record*, vol. 2311, pp. 167–175, 2012.

[8] W. Ma, Y. Liu, and X. Yang, "A dynamic programming approach for optimal signal priority control upon multiple high-frequency bus requests," *Journal of Intelligent Transportation Systems: Technology, Planning, and Operations*, vol. 17, no. 4, pp. 282–293, 2013.

[9] E. Christofa, I. Papamichail, and A. Skabardonis, "Person-based traffic responsive signal control optimization," *IEEE Transactions on Intelligent Transportation Systems*, vol. 14, no. 3, pp. 1278–1289, 2013.

[10] M. Xu, Z. Ye, H. Sun, and W. Wang, "Optimization model for transit signal priority under conflicting priority requests," *Transportation Research Record*, vol. 2539, pp. 140–148, 2016.

[11] X. Zeng, Y. Zhang, K. N. Balke, and K. Yin, "A real-time transit signal priority control model considering stochastic bus arrival time," *IEEE Intelligent Transportation Systems Magazine*, vol. 15, no. 4, pp. 1657–1666, 2014.

[12] Q. He, K. L. Head, and J. Ding, "PAMSCOD: Platoon-based arterial multi-modal signal control with online data," pp. 462–489.

[13] Y. Hao, Y. Wang, and X. Yang, "A schedule-based coordinated optimization model for Transit Signal Priority under Connected Vehicle environment," in *Proceedings of the 2014 IEEE 17th International Conference on Intelligent Transportation Systems (ITSC)*, pp. 2578–2583, Qingdao, China, October 2014.

[14] M. Zamanipour, L. Head, and J. Ding, "Priority System for Multimodal Traffic Signal Control," 2014.

[15] Q. He, K. L. Head, and J. Ding, "Multi-modal traffic signal control with priority, signal actuation and coordination," *Transportation Research Part C: Emerging Technologies*, vol. 46, pp. 65–82, 2014.

[16] J. Hu, B. B. Park, and Y.-J. Lee, "Transit signal priority accommodating conflicting requests under Connected Vehicles technology," *Transportation Research Part C: Emerging Technologies*, vol. 69, pp. 173–192, 2016.

[17] J. Hu, B. Park, and A. E. Parkany, "Transit signal priority with connected vehicle technology," *Transportation Research Record*, vol. 2418, pp. 20–29, 2014.

[18] J. Hu, B. B. Park, and Y.-J. Lee, "Coordinated transit signal priority supporting transit progression under Connected Vehicle Technology," *Transportation Research Part C: Emerging Technologies*, vol. 55, pp. 393–408, 2015.

[19] Z. Wu, G. Tan, J. Shen, and C. Wang, "A Schedule-based Strategy of Transit Signal Priority and Speed Guidance in Connected Vehicle Environment," *Journal of Advanced Transportation*, pp. 2416–2423, 2016.