Hindawi
Journal of Chemistry
Volume 2019, Article ID 2641315, 8 pages
https://doi.org/10.1155/2019/2641315

Research Article

The Use of Response Surface Methodology in Ammonia Oxidation Reaction Study

Marek Inger, Agnieszka Dobrzyńska-Inger, Jakub Rajewski, and Marcin Wilk

New Chemical Syntheses Institute, Al. Tysiąclecia Państwa Polskiego 13a, 24-110 Puławy, Poland

Correspondence should be addressed to Marek Inger; marek.inger@ins.pulawy.pl

Received 25 October 2018; Revised 18 December 2018; Accepted 14 January 2019; Published 6 February 2019

Academic Editor: Ekaterina Tsipis

The design of experiments (DoEs) with response surface methodology (RSM) were used to investigate the effect of operating parameters on the ammonia oxidation process. In this paper, the influence of reactor's load and temperature of reaction as independent variables was investigated. The efficiency of NH_3 oxidation to NO and N_2O concentration in nitrous gases gas was identified as response variables. As a result of these studies, statistically significant models for two responses variables were developed.

1. Introduction

At the industrial scale, nitric acid is obtained in the Ostwald process which is composed of three major stages: the catalytic oxidation of NH_3 to NO, oxidation of NO to NO_2, and NO_2 absorption in water with the formation of HNO_3 [1].

Overall, the nitric acid production process is described with the following equation:

$$NH_3 + 2O_2 \longrightarrow HNO_3 + H_2O + 421.2\,\text{kJ} \quad (1)$$

For producing nitrogen oxides and then nitric acid, only nitrogen derived from ammonia is used, whereas nitrogen coming from air does not take part in the reaction. Theoretically, the specific consumption of ammonia is 269 kg NH_3/t HNO_3.

Depending on the process conditions, NO, N_2O, and N_2 are obtained in varying proportions as a result of ammonia oxidation according to the following reactions:

$$4NH_3 + 5O_2 \longrightarrow 4NO + 6H_2O + 907.3\,\text{kJ} \quad (2)$$

$$4NH_3 + 4O_2 \longrightarrow 2N_2O + 6H_2O + 1104.9\,\text{kJ} \quad (3)$$

$$4NH_3 + 3O_2 \longrightarrow 2N_2 + 6H_2O + 1369.1\,\text{kJ} \quad (4)$$

Additionally, for the determination of real specific consumption of ammonia, a number of factors should be taken into account including absorption capacity and ammonia demand for the selective catalytic reduction of NO_x (if present in the process) and the degree of ammonia conversion to the main product (NO), that is, ammonia oxidation efficiency. Apart from reactions (2)–(4), depending on the process conditions, the other parallel and sequential reactions can occur, but their nitrogen products are N_2 and N_2O. The real specific consumption of ammonia is higher by dozens or kilograms than a theoretical one, and the value of this depends on the formation of by-products in the ammonia oxidation process. The efficiency of reaction depends mainly not only on the type of the catalyst but also on process parameters such as pressure, temperature, the residence time, or reactor's load and ammonia concentration in inlet mixture. Reactor's load is described as the amount of oxidized ammonia per gauze surface and time unit, kg $NH_3/(m^2h)$.

Due to the binding legal provisions, the other important parameter when regarding the ammonia oxidation reaction is the amount of nitrous oxide which is a greenhouse gas being formed as a by-product. A measure of the amount of nitrous oxide being formed is its concentration in nitrous gases.

Nowadays, commonly applied catalysts for ammonia oxidation are catalytic gauzes made of the platinum alloy with rhodium. Usually, additional gauzes made of palladium, nickel, or gold alloy are placed under the gauze package, the function of which is to "catch" platinum diminishing from the

catalytic gauzes. Catalytic gauzes are made of wire with a diameter of 0.060–0.092 mm [1–5].

An alternative solution involves the application of the oxide catalyst containing no noble metals among which different catalysts were studied, e.g., perovskite-type oxides with different metals, monolith, and the hybrid one combined with the monolith catalyst and catalytic gauzes [6–10].

Oxidation pressure has an inversely proportional effect on ammonia oxidation efficiency. A maximum efficiency (equilibrium) in reactors operating under atmospheric pressure is 97%–98%, whereas in plants operating under higher pressure, it is 95%–97% at medium pressure (3–6 bar) and 92–94% at high pressure (10 bar). In order to compensate the effect of oxidation pressure, the temperature of reaction should be risen. During exploitation, the catalyst for ammonia oxidation undergoes the process of aging and ammonia efficiency is steadily decreasing because of the loss of platinum. In modern dual pressure nitric acid plants, ammonia is oxidized under the medium pressure of 3.5–5 bar. The remaining parameters such as the reactor's load, temperature of reaction, and the number of catalyst gauzes are subject to optimization.

Optimization of process variables is based on the mathematical modeling. In order to obtain a reliable process model, it is necessary to know the bases of the process and the effect of the process variables on its course. Very often, carrying out tedious studies is necessary to optimize the process variables. For example, in conventional research, the method of "one factor at a time" technique is applied, i.e., the effect of only one parameter on the experiment result is observed with maintaining other parameters at the stable level. This time-consuming and costly method is more frequently replaced with statistical-mathematical methods which involve design of experiments and analysis of the obtained results using response surface methodology (RSM). This makes it possible to study the effect of a few process variables (independent variables) on one or a few final results of the process (response variable). The choice of experiment plan depends mainly on the issue being the subject matter of studies as well as on the set objectives. Among different available experiment plans, most frequently applied are as follows: full factorial design, fractional factorial design, Plackett–Burman, central composite, Box–Behnken, or Taguchi design [11].

The design of experiments (DoEs) are often used for study of the effect of parameters on the course of various chemical processes and the process optimization. The examples of those are research on optimization of anaerobic ammonium oxidation [12], CO hydrogenation [13], ammonia photocatalytic degradation by Zn/Oak charcoal composite [14], steam methane reforming [15, 16], water-gas shift reaction [17], and methanol synthesis [18, 19].

Central composite design (CCD) is widely applied in research due to its flexibility [11]. CCD contains a factorial or fractional factorial design with center points and an additional axial point (star points). Exemplary types of central composite design are presented in Figure 1.

In the present work, the face-centered central composite design (CCD) method was used to study the influence of temperature of nitrous gases directly under catalytic gauzes meaning the effect of the temperature of reaction and reactor's load on ammonia oxidation efficiency and N_2O concentration in nitrous gases. Based on results obtained in experiments of the ammonia oxidation process under medium pressure carried out in accordance with the selected plan, the mathematical model, its statistical significance evaluation, and result analysis with response surface methodology (RSM) were developed.

2. Experimental

2.1. Materials. The package of five standard knitted gauzes made of the platinum alloy with the addition of 10 wt.% Rh made of 0.076 mm wire and a specific weight of 600 g/m^2 was applied in studies of the ammonia oxidation process. The catalyst applied in studies constitutes the part of the catalyst package usually used in industrial nitric acid plants.

2.2. Equipment. Studies were carried out in the pilot plant, the scheme of which is presented in Figure 2. The ammonia-air mixture with the stable ratio is directed to the reactor with a diameter of 100 mm where the catalytic gauzes are placed. The ammonia concentration in air-ammonia mixture determined on the basis of flow measurements of these two gases was 10.9 vol.% During measurements, the temperature of air-ammonia mixture was changed in such a manner as to obtain the temperature of nitrous gases as assumed in the experiment plan at approximately constant air-ammonia ratio. Temperatures of air-ammonia mixture were shown with research results in Table 1. The flow of air ammonia was also controlled in order to obtain the accurate reactor's load. All the parameters were recorded. All the measurements were carried out under the pressure of 5 bar. The air-ammonia mixture flow rate at the inlet of the reactor was selected in such a manner so that the linear velocity of the gas flow through the catalytic gauzes was in the range of 1–2.5 m/s, as typical for the medium-pressure reactor.

2.3. Analytical Methods. Ammonia oxidation efficiency was determined by a titration method. The air-ammonia mixture and nitrous gases after reaction samples at claimed parameters were collected at the same time in the vacuum flasks containing appropriate absorbent solutions.

Ammonia from air-ammonia mixture samples was absorbed in water with the formation of ammonia-water solution which was then titrated with sulphuric acid.

In case of nitrous gases samples, 3% water solution of hydrogen peroxide was used. After conditioning the sample for a sufficient period of time, NO oxidized completely to NO_2 and next it reacted with water to form HNO_3. The formed nitric acid was titrated with the sodium hydroxide solution in the presence of an indicator.

Ammonia oxidation efficiency η was calculated according to the following formula:

$$\eta = \left(\frac{X_2}{X_1}\right) \cdot 100\%, \tag{5}$$

where X_1 is the ammonia concentration in ammonia-air mixture, % w/w, and X_2 is the concentration of oxidized

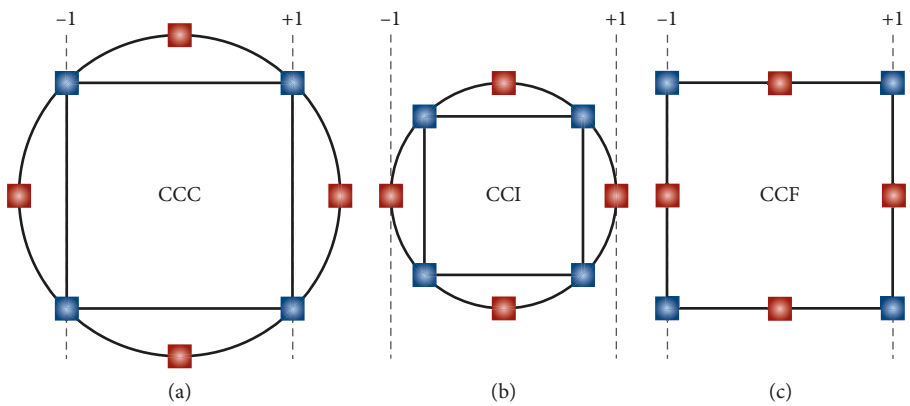

Figure 1: Star points locations in three types of CCD plans [20]: (a) circumscribed; (b) inscribed; (c) face-centered.

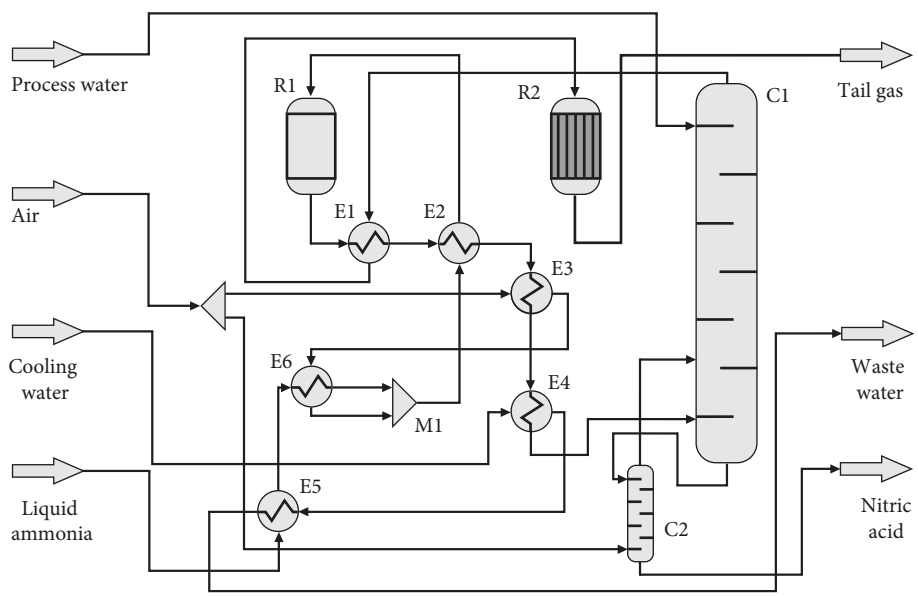

Figure 2: Scheme of the pilot plant. C1, absorption column; C2, bleaching column; E1–E6, heat exchangers; M1, air-ammonia mixer; R1, ammonia oxidation reactor; R2, selective catalytic reduction reactor.

Table 1: Temperatures of air-ammonia mixture, ammonia oxidation efficiency, and N_2O concentrations for the conducted experiments.

Run	Air-ammonia mixture temperature (°C)	Ammonia oxidation efficiency (%)	N_2O concentration (ppm)
1	165	92.2	1499
2	140	92.0	1762
3	195	93.5	1079
4	190	92.7	1207
5	165	92.4	1460
6	135	90.8	1968
7	165	92.5	1451
8	170	93.7	1348
9	180	90.9	1443
10	158	91.4	1620
11	145	94.1	1536

ammonia, % w/w. The result of each measurement is an average value, calculated from 7 independent samplings. The difference in the extreme individual values was not greater than ±0.3% in comparison with the average one.

Nitrous oxide (N_2O) concentration in nitrous gases was determined by the gas chromatography method. Gaseous samples were collected in the vacuum flasks containing 3% water solution of hydrogen peroxide. After the absorption of nitrous gases and water vapor condensation, exhaust gas from the flasks was injected to the gas chromatograph through 1 ml sample loop. The nitrous oxide concentration was determined by the Unicam 610 gas chromatograph equipped with a discharge ionization detector (DID) and the Haye Sep Q column. Filament current was 6.36 mA, whereas helium carrier gas flowed at the rate of 47 mL/min. The result of each measurement was an average value calculated from 3 independent samplings. The difference in the extreme

individual values was not greater than ±35 ppm in comparison with the average one.

2.4. Design of Experiment. Face-centred central composite design (CCD) was used to determine the influence of the independent reaction variables on the ammonia oxidation process. The Design Expert 11.0.6.0 version (Stat-Ease, Inc., Minneapolis, MN, USA) software was used for the experimental design and regression analysis of experimental data.

The reactor's load and (X_1) and temperature (X_2) were selected as independent variables. For statistical calculations, the levels of independent variables were normalized (coded) according to the following equation:

$$X_i = \frac{x_i - x_0}{\Delta x_i}, \quad (6)$$

where X_i is the coded level of the independent variable (−1, 0, or 1), x_i is the actual value of variable, x_0 is the value of x_i at the centre point, Δx_i is the step change in x_i, and i is the independent variable (1, 2). The minimum and maximum ranges for both parameters are presented in terms of coded and uncoded symbols in Table 2.

The response variables were ammonia oxidation efficiency (R_1) and N_2O concentration in nitrous gases (R_2). In order to describe the effect of independent variables, the polynomial second-degree model given by the following equation was initially assumed:

$$R = b_0 + b_1X_1 + b_2X_2 + b_{12}X_1X_2 + b_{11}X_1^2 + b_{22}X_2^2, \quad (7)$$

where R is the measured response variable, b_0 is the constant, b_1 and b_2 are the linear coefficients, b_{11} and b_{22} are the quadratic coefficients, and b_{12} is the interaction coefficient.

A total of 11 experiments including three replicates at the centre point were necessary to estimate the coefficients of the model using multiple linear regression analysis.

The experiments were conducted in a random order to minimise the effects of uncontrolled factors. The experimental design matrix of the independent variables (coded) is presented in Table 3.

The effect of each variable and their interactions on response variables was studied. The validity of the model equation was checked with analysis of variance (ANOVA) and with the correlation coefficient R^2. The significance was checked with the F-test.

3. Results and Discussion

In the studied scope of independent variables X_1 and X_2, ammonia oxidation efficiency (R_1) ranged from 90.8% to 94.1%, whereas N_2O concentration (R_2) ranged from 1079 to 1978 ppm. The air-ammonia mixture temperature during sampling and individual results of experiments is presented in Table 1.

Results of ANOVA for the response variables R_1 and R_2 are presented in Tables 4 and 5, respectively.

The *model F* value of 20.90 implies that the model is significant. There is only a 0.23% chance that an F value this large could occur due to noise. p values less than 0.0500 indicate that model terms are significant. In this case, only X_1 meets this requirement. The *lack-of-fit F* value of 4.67 implies that *lack-of-fit* is not significantly relative to the pure error. There is 18.15% chance that a *lack-of-fit F* value this large could occur due to noise.

Table 2: Levels and actual values range of independent variables used in the conducted experiments.

Independent variables	Symbols		Levels		
	Coded	Uncoded	−1	0	+1
Reactor's load (kg $NH_3/(m^2h)$)	X_1	x_1	456	582	708
Temperature (°C)	X_2	x_2	870	890	910

Table 3: The experiments matrix.

Run	Independent variables	
	X_1	X_2
1	0	0
2	0	−1
3	−1	1
4	0	1
5	0	0
6	1	−1
7	0	0
8	−1	0
9	1	1
10	1	0
11	−1	−1

Table 4: Analysis of variance (ANOVA) for ammonia oxidation efficiency (R_1).

Source	Sum of squares	*df*	Mean square	*F* value	*p* value
Model	11.40	5	2.28	20.90	0.0023
X_1	11.26	1	11.26	103.26	0.0002
X_2	0.0052	1	0.0052	0.0478	0.8355
X_1X_2	0.0942	1	0.0942	0.8639	0.3953
X_1^2	0.0061	1	0.0061	0.0558	0.8227
X_2^2	0.0371	1	0.0371	0.3403	0.5850
Residual	0.5452	5	0.1090		
Lack of fit	0.4771	3	0.1590	4.67	0.1815
Pure error	0.0681	2	0.0341		
Cor. total	11.94	10			

Table 5: Analysis of variance (ANOVA) for N_2O concentration (R_2).

Source	Sum of squares	*df*	Mean square	*F* value	*p* value
Model	$5.869E+05$	5	$1.174E+05$	73.40	0.0001
X_1	$1.902E+05$	1	$1.902E+05$	118.95	0.0001
X_2	$3.932E+05$	1	$3.932E+05$	245.89	<0.0001
X_1X_2	1133.44	1	1133.44	0.7088	0.4383
X_1^2	836.07	1	836.07	0.5228	0.5020
X_2^2	882.73	1	882.73	0.5520	0.4909
Residual	7995.81	5	1599.16		
Lack of fit	6674.41	3	2224.80	3.37	0.2374
Pure error	1321.41	2	660.70		
Cor. total	$5.949E+05$	10			

Table 6: Regression coefficients of the second-order polynomials models for ammonia oxidation efficiency (R_1) and N_2O concentration (R_2).

Regression coefficients	Value	Standard error
Ammonia oxidation efficiency		
b_0	92.43	0.1694
b_1	−1.37	0.1348
b_2	0.0295	0.1348
b_{12}	0.1535	0.1651
b_{11}	0.0490	0.2075
b_{22}	−0.1210	0.2075
N_2O concentration		
b_0	1468.33	20.51
b_1	178.06	16.33
b_2	−256.00	16.33
b_{12}	−16.83	19.99
b_{11}	18.17	25.12
b_{22}	18.67	25.12

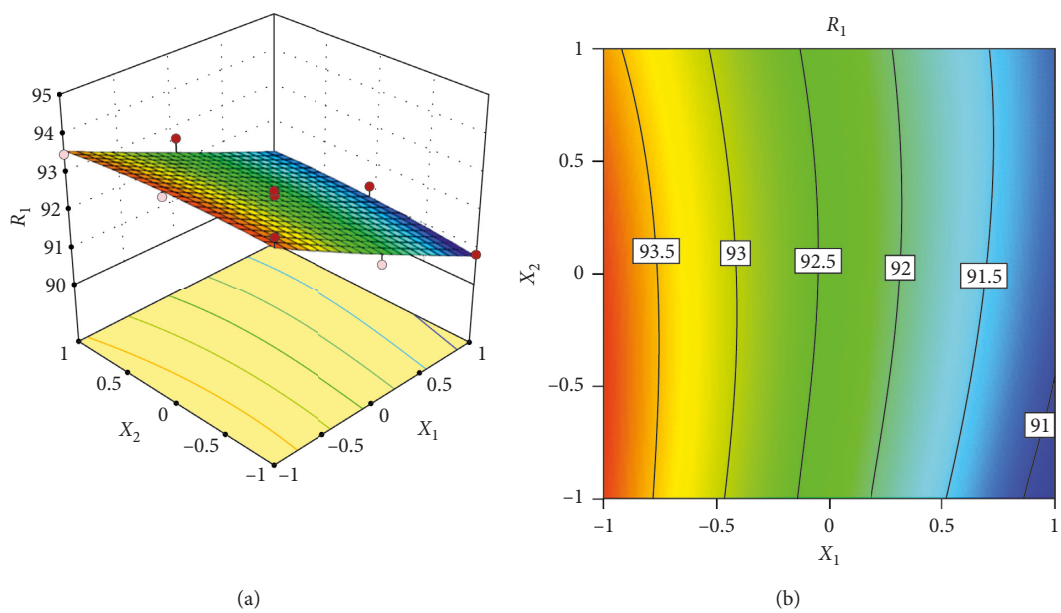

Figure 3: Response surface plot and contour plot showing the effect of independent variables X_1 and X_2 on the response variable R_1 (%).

The *model F* value of 73.40 implies that the model is significant. There is only a 0.01% chance that *F* value this large could occur due to noise. *p* values less than 0.0500 indicate that model terms are significant. In this case, X_1 and X_2 are significant model terms. The *lack-of-fit F* value of 3.37 implies the *lack-of-fit* is not significant relative to the pure error. There is a 23.74% chance that a *lack-of-fit F* value this large could occur due to noise.

In accordance with the proposed equation (7), regression coefficients for two response variables (R_1 and R_2) were calculated. For both these responses, good adjustment of experimental data with 95% confidence interval was achieved. The calculation results are presented in Table 6.

Figures 3 and 4 present response surface developed based on calculation results.

The calculated correlation coefficients R^2 for both response surfaces are shown in Table 7.

In case of oxidation efficiency, the *predicted* R^2 of 0.5725 is not as close to the *adjusted* R^2 of 0.9087 (the difference is more than 0.2). This may indicate a large block effect or a possible problem with this model and/or data. In the case of N_2O concentration, the *predicted* R^2 of 0.8772 is in reasonable agreement with the *adjusted* R^2 of 0.9731.

Bearing in mind the statistical significance of particular elements of equation (7) specified with the value of *p* parameter (p value < 0.05) and low value of the *predicted* R^2 coefficient, the base equation (7) was modified by reducing the elements with no statistical significance.

Finally, equations are as follows (7):

$$R_1 = 92.39 - 1.37X_1,$$
$$R_2 = 1488 + 178X_1 - 256X_2. \quad (8)$$

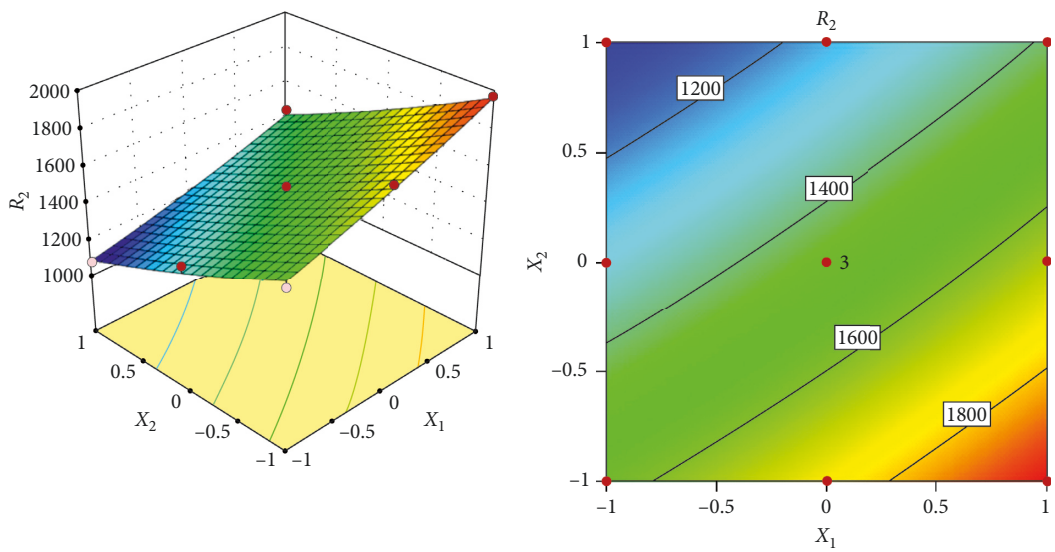

(a) (b)

Figure 4: Response surface plot and contour plot showing the effect of independent variables X_1 and X_2 on the response variable R_2 (ppm).

Table 7: The comparison between adjustment coefficients for two response surfaces.

Ammonia oxidation efficiency		N_2O concentration	
R^2	0.9543	R^2	0.9866
Adjusted R^2	0.9087	Adjusted R^2	0.9731
Predicted R^2	0.5725	Predicted R^2	0.8772

Results of ANOVA for the modified models and values of correlation coefficients were presented in Tables 8–10.

After reducing the base model to statistically important elements, it turned out that the model was simplified to the linear one without interaction. In case of ammonia oxidation efficiency within the studied scope of variability, the temperature had no effect on the achieved ammonia oxidation efficiency, but it had the impact on the reactor's load. The model adequacy was confirmed by the analysis of variance (ANOVA) with F-test. The model F values of 148.48 and 203.41 imply that models are significant. In those cases, there is only a 0.01% chance that F values this large could occur due to noise. The p values for both cases (less than 0.0500) indicate that models terms are significant.

The models accuracy was checked by comparing the experimental and predicted results. The difference between the *adjusted* R^2 and *predicted* R^2 for two response surfaces was less than 0.2 (Table 10). Figure 5 shows this dependency for both response variables graphically.

Based on simplified models, the effect of two independent parameters on the values of response variables was determined, which is presented in Figure 6.

4. Conclusions

Ammonia oxidation process was regarded as a "black box" with no reference to reaction mechanism and no kinetic stables being specified.

Table 8: Analysis of variance for a simplified model for response variable R_1.

Source	Sum of squares	df	Mean square	F value	p value
Model	11.26	1	11.26	148.48	<0.0001
X_1	11.26	1	11.26	148.48	<0.0001
Residual	0.6825	9	0.0758		
Lack of fit	0.6144	7	0.0878	2.58	0.3079
Pure error	0.0681	2	0.0341		
Cor. total	11.94	10			

Table 9: Analysis of variance results for simplified model for response variable R_2.

Source	Sum of squares	df	Mean square	F value	p value
Model	$5.834E+05$	2	$2.917E+05$	203.41	<0.0001
X_1	$1.902E+05$	1	$1.902E+05$	132.64	<0.0001
X_2	$3.932E+05$	1	$3.932E+05$	274.19	<0.0001
Residual	11472.89	8	1434.11		
Lack of fit	10151.48	6	1691.91	2.56	0.3073
Pure error	1321.41	2	660.70		
Cor. total	$5.949E+05$	10			

Table 10: The comparison between adjustment coefficients for two response surfaces.

Ammonia oxidation efficiency		N_2O concentration	
R^2	0.9428	R^2	0.9807
Adjusted R^2	0.9365	Adjusted R^2	0.9759
Predicted R^2	0.9127	Predicted R^2	0.9580

This paper presents studies of the effect of reactor's load and temperature of reaction on ammonia oxidation efficiency and the amount of by-product N_2O. For the quantitative indication of this issue, the face-centered central composite design (CCD) was applied.

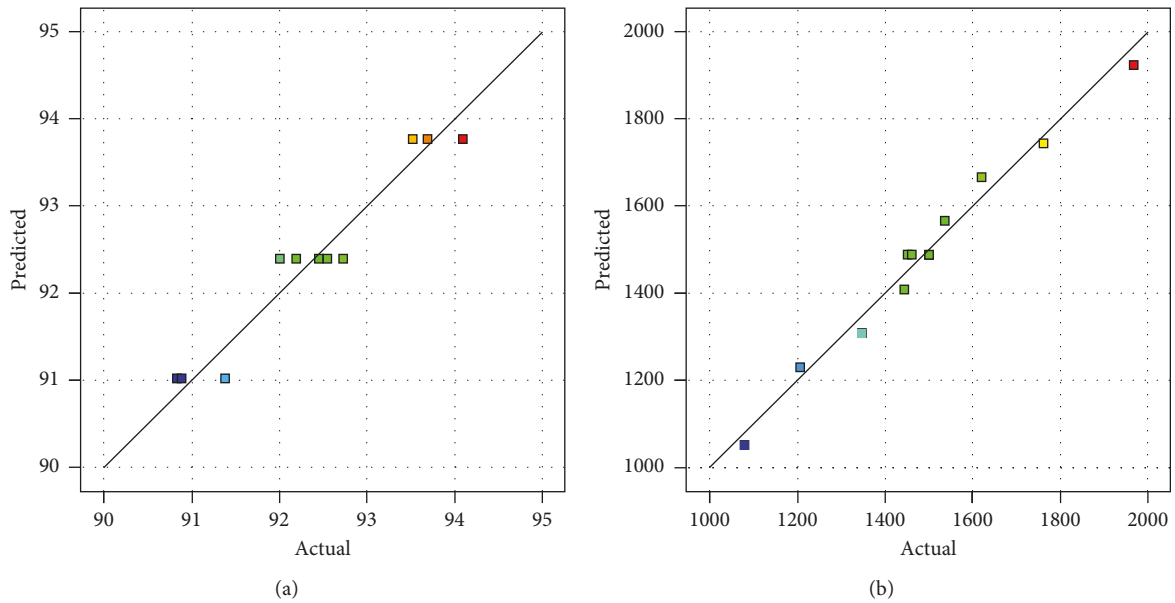

Figure 5: The comparison of predicted and experimental ammonia oxidation efficiency R_1 (%) (a) and N_2O concentration R_2 (ppm) (b).

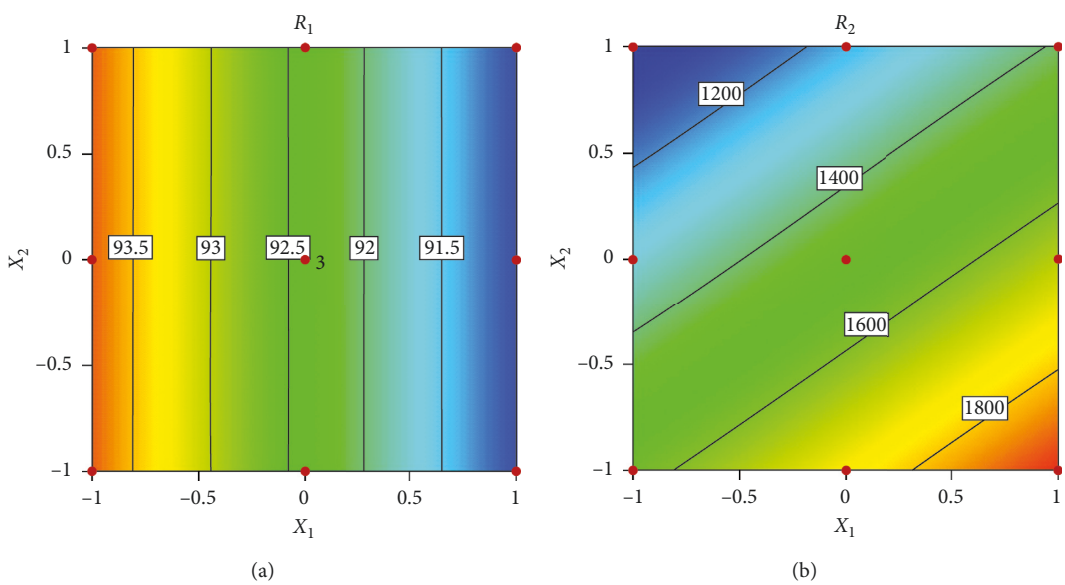

Figure 6: Contour plot showing the effect of independent variables X_1 and X_2 on response variables R_1 (%) (a) and R_2 (ppm) (b) corresponding with simplified models.

Based on the results of experiments, the empirical equation was obtained which describes the quantitative effect of independent variables (reactor's load and temperature of nitrous gases) on response variables (ammonia oxidation efficiency and N_2O concentration). Findings of these studies show that the effect of these parameters can be shown with statistically significant linear function with a 95% confidence interval, for which regression coefficients were calculated.

For this experiment, the number of gauzes was selected in such a manner as to ensure that the obtained ammonia oxidation efficiency was lower than the possible maximum efficiency than can be achieved under such a pressure. The obtained values of ammonia oxidation efficiency ranged from 90.8% to 94.1%, whereas under such a pressure, ammonia oxidation efficiency can reach 97%. These experiment conditions allowed specifying variability of response variables with the changed independent variables. Within the studied scope of variables, ammonia oxidation efficiency is reversely proportional to the reactor's load for the applied catalytic package. Lowering the catalyst's load below the studied scope and/or increasing the number of gauzes in the catalyst package would allow obtaining oxidation efficiency similar to equilibrium efficiency achieved under this pressure.

According to dependency known in the literature [1] the optimum temperature of ammonia oxidation is 890°C under

5 bar. The choice of reaction temperature variability (±20°C) allowed specifying the variability sensitivity of this parameter to ammonia oxidation results. Based on the achieved results, it was found that the change of temperature in the regarded variability scope has no effect on ammonia oxidation efficiency. The extension of this scope would lead to studying this dependency under conditions inapplicable in industrial practice.

In the case of N_2O concentration, both these variables have a linear effect on the achieved value of this response variable. Increasing the temperature with a simultaneous decrease in reactor's load reduces the amount of N_2O being formed with the temperature having a greater effect. However, higher temperature causes higher losses of platinum during catalyst exploitation which has also a significant impact on the catalyst industrial exploitation.

Data Availability

The data used to support the findings of this study are available from the corresponding author upon request.

Conflicts of Interest

The authors declare that there are no conflicts of interest regarding the publication of this paper.

References

[1] M. Thiemann, E. Scheibler, and K. W. Wiegand, "Nitric acid, nitrous acid, and nitrogen oxides," in *Ullman's Encyclopedia of Industrial Chemistry*, Wiley-VCH Verlag GmbH & Co. KGaA, Weinheim, Germany, 2002.

[2] S. Marret and L. du Chatelier, "Recent advances in catalyst technology used in nitric acid production," in *Proceedings of the Fertiliser Society, No. 413*, London, UK, 1998.

[3] O. Kay and T. Buennagel, "Targeting improving performance and conversion efficiency in nitric acid plants," in *Proceedings of International Fertiliser Society, No. 787*, London, UK, 2016.

[4] New advances in platinum gauze systems," in *Proceedings of Nitrogn+Syngas, 344*, pp. 34–41, 2016.

[5] Catalysts for ammonia oxidation," in *Proceedings of Nitrogen+Syngas, 349*, pp. 48–50, 2017.

[6] V. A. Sadykow, L. A. Isupova, I. A. Zolotarskii et al., "Oxide catalysts for ammonia oxidation: properties and perspectives," *Applied Catalysis A: General*, vol. 204, no. 1, pp. 59–87, 2000.

[7] G. Biausque and Y. Schuurman, "The reaction mechanism of the high temperature ammonia oxidation to nitrous oxide over $LaCoO_3$," *Journal of Catalysis*, vol. 276, no. 2, pp. 306–313, 2010.

[8] J. Petryk and E. Kołakowska, "Cobalt oxide catalysts for ammonia oxidation activated with cerium and lanthanum," *Applied Catalysis A: Environmental*, vol. 24, no. 2, pp. 121–128, 2000.

[9] L. A. Isupova, E. F. Sutormina, N. A. Kulikovskaya et al., "Honeycomb supported perovskite catalysts for ammonia oxidation processes," *Catalysis Today*, vol. 105, no. 3-4, pp. 429–435, 2005.

[10] L. A. Isupova, E. F. Sutormina, V. P. Zakharov, N. A. Rudina, N. A. Kulikovskaya, and L. M. Plyasova, "Cordierite-like mixed oxide monolith for ammonia oxidation process," *Catalysis Today*, vol. 147, pp. S319–S323, 2009.

[11] D. C. Montgomery, *Design and Analysis of Experiments*, John Wiley & Sons, Hoboken, NJ, USA, 8th edition, 2012.

[12] A. Jalilzadeh, R. Nabizadeh, A. Mesdaghinia et al., "Optimization and modelling of Oxygen demand removal by ANAMMOX process using response surface methodology," *Journal of Chemistry*, vol. 2013, Article ID 930352, 8 pages, 2013.

[13] H. Atashi, M. Shiva, F. F. Tabrizi, and A. A. Mirzaei, "Study of syngas conversion to light olefins by response surface methodology," *Journal of Chemistry*, vol. 2013, Article ID 945735, 12 pages, 2013.

[14] N. Tafreshi, S. Sharifnia, and S. M. Dehaghi, "Box–Behnken experimental design for optimization of ammonia photocatalytic degradation by ZnO/Oak charcoal composite," *Process Safety and Environmental Protection*, vol. 106, pp. 203–210, 2017.

[15] M. S. Nobandegani, M. R. S. Birjandi, T. Darbandi, M. M. Khalilipour, F. Shahraki, and D. Mohebbi-Kalhori, "An industrial steam methane reformer optimization using response surface methodology," *Journal of Natural Gas Science and Engineering*, vol. 36, pp. 540–549, 2016.

[16] A. Hafizi, M. R. Rahimpour, and S. Hassanajili, "Hydrogen production by chemical looping steam reforming of methane over Mg promoted iron oxygen carrier: optimization using design of experiments," *Journal of the Taiwan Institute of Chemical Engineers*, vol. 62, pp. 140–149, 2016.

[17] S. Z. Saw, J. Nandong, and U. K. Ghosh, "Optimization of steady-state and dynamic performances of water–gas shift reaction in membrane reactor," *Chemical Engineering Research and Design*, vol. 134, pp. 36–51, 2018.

[18] S. Hoseiny, Z. Zare, A. Mirvakili, P. Setoodeh, and M. R. Rahimpour, "Simulation–based optimization of operating parameters for methanol synthesis process: application of response surface methodology for statistical analysis," *Journal of Natural Gas Science and Engineering*, vol. 34, pp. 439–448, 2016.

[19] H. Khalilpourmeymandi, A. Mirvakili, M. R. Rahimpour, and A. Shariati, "Application of response surface methodology for optimization of purge gas recycling to an industrial reactor for conversion of CO_2 to methanol," *Chinese Journal of Chemical Engineering*, vol. 25, no. 5, pp. 676–687, 2017.

[20] NIST/SEMATECH e-Handbook of Statistical Methods, 2012, http://www.itl.nist.gov/div898/handbook.