Hindawi
Journal of Computer Networks and Communications
Volume 2018, Article ID 4071474, 8 pages
https://doi.org/10.1155/2018/4071474

Research Article

IoT-Based Ambulatory Vital Signs Data Transfer System

Syed Misbahuddin,[1] Junaid Ahmed Zubairi,[2] Abdul Rahman Alahdal,[1] and Muhammad Arshad Malik[1]

[1]*Umm Al-Qura University, Makkah, Saudi Arabia*
[2]*State University of New York at Fredonia, Fredonia, NY 14063, USA*

Correspondence should be addressed to Syed Misbahuddin; doctorsyedmisbah@yahoo.com

Received 30 May 2018; Revised 25 September 2018; Accepted 23 October 2018; Published 11 November 2018

Guest Editor: Shamik Sengupta

In emergencies or life-threatening situations, patients are generally shifted to hospitals in ambulances. The health conditions of on-board patients can become critical if they are not evaluated and treated in time. Chances of saving lives can increase significantly if patients' vital signs inside an ambulance or on-site triage area are transferred to a hospital in real time. If the ambulances are linked to target hospitals, then the physicians in emergency rooms can monitor on-board patients' vital signs and issue instructions to paramedics to stabilize patients' medical conditions before they reach the assigned hospitals. Transferred vital signs data may also be archived for medical records. The Internet of things (IoT) is a paradigm which envisions Internet connectivity of virtually everything on the earth. In this paper, an IoT-based low-cost solution is proposed to monitor, archive, analyze, and tag the vital signs data of multiple patients and transfer them to the remote hospital in real time. This opens up a lot of possibilities in telemedicine and disaster management. As a proof of concept, the functionality of the proposed system was validated by developing a prototype model utilizing an IoT-enabled medical sensor board and a Linux server mimicking the remote hospital server. Results of actual data transmission obtained during experimentation are also provided. It is hoped that the proposed system can play a role in saving human lives in disaster situations.

1. Introduction

A special disaster management approach is required in an emergency or calamitous situation that may occur at a crowded facility. In any emergency, the first responders on the site are capable of handling the situation. On the contrary, when a mass disaster occurs, the paramedics may not be able to handle the situation because the disaster of any kind could lead to casualties on a mass scale. The type of disasters could be natural or man-made, both of which cause losses to human lives and properties. Most common disaster types are earthquake, fire, tsunami flood, building collapse, massive food poisoning, etc.

In any kind of disaster, swift and efficient medical aid is crucial. Depending upon the type of disaster, the local authorities dispatch appropriate first responders to the site. Usually, the first responders include ambulances, fire brigades, and elite emergency response teams. Traumatized and injured people are transported via ambulances to the closest hospitals for necessary medical aid. The paramedic crew in the ambulance attempts to stabilize the patients' condition so that the physician can attend to the patients. However, in some cases, the early arrival of the ambulances at the hospital becomes difficult due to various reasons. This delay could affect patients' lives seriously, especially in life-threatening situations [1]. The chances of saving a patient's life improve considerably if his/her vital signs (blood pressure, pulse, blood oxygenation, and respiration) and additional diagnostic medical data (e.g., EKG) are transferred to the physicians in real time. If the ambulances are linked to hospitals via cellular networks, then the live transmission of patients' vital signs and other medical data can become possible. Based on the information received at the hospital, physicians can send necessary instructions to paramedics attending the patients in an ambulance aiming to stabilize the patients' condition.

The Internet of things (IoT) is a newly emerging computing paradigm which is gaining roots in the scenario of modern wireless telecommunications. IoT is a system in which objects, animals, or people are provided with unique network identifiers, and their data can be transferred without requiring human-to-human or human-to-computer interaction. IoT has evolved from the convergence of wireless technologies, micro-electromechanical systems (MEMSs), and the Internet [2]. IoT ecosystem can play a vital role in ambulatory data transfer.

In an earlier work, Zubairi et al. proposed a medical data transmission over cellular network (MEDTOC) system [3]. In this system, the ambulances are required to be equipped with cellular (3G UMTS) links and a medical data network (MDN). Even if the ambulance is at a considerable distance from the hospital, it can use the cellular network for transmission of vital signs and additional data. In the proposed system, the medical instruments collecting patients' vital signs such as EKG, heart rate, temperature, and oxygenation are connected to the MDN inside the ambulance. The medical instruments inject digitized vital signs data into MDN. The medical instruments generate controller area network- (CAN-) formatted data over the medical data network. The data transfer protocol is outlined, including aggregation rules, packet formats, header fields, and data types. Simulation results have shown the feasibility of aggregated vital signs data transfer using prioritized cellular channels and data reduction techniques. Later, a parallel scenario was introduced for identifying and assigning mass disaster victims to hospitals rapidly using RTS (Revised Trauma Score) values from triage tags [4]. This work was based on the guidance provided by the emergency room physicians with reference to the expertise of paramedics in ascertaining the condition of patients. The paramedics receive necessary training to quickly classify the patients as per color-coded triage tags. The color of the triage tag corresponds to an approximate range of RTS values. The results presented in [4] show a complete scheme for transfer of RTS values from the disaster site to the hospital and assigning patients to suitable hospitals based on factors such as distance, patient condition, hospital capacity, and hospital trauma rank.

The current paper enhances the previously proposed system introduced in [3, 4] with the induction of Internet of things (IoT) features. The core objective of this system is to transfer the vital signs of multiple patients to a selected remote hospital over a mobile network. This approach will allow real-time transfer of vital signs to the hospitals for accurate evaluation of the mass disaster's victims for rapid medical advice. The intervention by the physicians using real-time vital signs data will increase the chances of saving lives when physicians are not physically present at the disaster site. In the revised MEDTOC system, the embedded components attributed with the IoT technology are used to collect and transfer the vital signs data for each patient in the ambulance. The MEDTOC protocol is modified to include localization information for the patients such as ambulance number, the area it is coming from, current location, and the type of disaster along with vital signs data so that the remote hospital staff may be well prepared to receive and treat the patients efficiently. In addition, the real-time transmission of vital signs is utilized in the MEDTOC system to build a comprehensive medical disaster management system that collects, displays, archives, and tags the vital signs of patients in critical condition. This approach will enable the first responders and physicians to monitor the most critical patients even if they have not yet reached the hospital. Our focus is on dealing with mass disasters and emergency situations to increase the chances of saving more lives. The idea presented is general and is applicable to any genre of disaster. However, the sole assumption is the survivability of the cellular infrastructure.

The salient features of our contribution presented in this paper are summarized as follows:

(i) A method is suggested and tested to send vital signs of multiple patients affected in a disaster to a remote hospital's server so that emergency room physicians become better prepared to handle the upcoming patients.

(ii) The hospital server can receive multiple patients' data and display over its screen in a graphical form for visual observation. The received data can be recorded in a database for further analysis.

(iii) The hospital server maintains records of on-duty doctors. The hospital server forwards the upcoming patients' vital signs data to the first available doctor's smartphone where they are displayed in a graphical form

The rest of the paper is organized as follows: Section 2 discusses related work in this field of research. Section 3 details the architecture of the proposed system. Section 4 presents the results of the prototype design, and finally, the paper is concluded in Section 5.

2. Related Work

The issue of transferring a single patient's vital signs to hospitals has been a focus of interest for many researchers, and several schemes were suggested in this direction as reported in the literature [5–8]. Fatmi et al. [9] proposed a remote monitoring system in which a mobile app running on a smartphone platform reads patients' vital signs such as blood pressure signal, blood saturated oxygen (SpO2), and temperature. The app transports the data to a server located in a cloud or to a corporate data center. Iancu-Constantin et al. proposed an approach which allows the physicians to monitor biometric data such as heart rate/oxygen saturation, ECG, and blood pressure acquired using a real-time event-based engine [10]. In [11], an eHealth system has been developed for cardiac telemonitoring which uses a LinkIt ONE development board.

An eHealth smart networked system has been investigated in [12]. The proposed system is aimed at avoiding delays in transferring the medical information to the healthcare providers especially in case of accidental and emergency situations. The system architecture is based on

medical sensors which measure patients' physical parameters by using wireless sensor networks (WSNs). The sensors transfer data from patients' bodies over the wireless network to the cloud environment. The work aims to extract an appropriate decision based on patients' condition and historical data. Therefore, the patients will have high quality of service because of the real-time data availability to the healthcare staff. Rolim et al. has suggested a system for automatic collection of patients' information employing wireless sensor networks connected to medical equipment [13]. The collected data are transferred to the healthcare provider centers in the cloud to store, process, and analyze patients' data.

Over the last few years, the notion of IoT has attracted researchers to investigate its application in the area of healthcare [14]. However, induction of IoT in the healthcare field is still in the early stages. Healthcare domain mandates different strategies in disastrous circumstances. IoT-based healthcare solutions for an emergency situation need further investigation [13]. Yang et al. discussed the potential application of IoT to emergency situations [15]. They argued that introducing IoT technology in emergencies will enhance its operational strategic values.

Most of the works reported in the literature are limited to transferring physiological data for individual patients. It is very likely that, in a massive disaster situation, several patients are affected at the same time and several patients may be transferred to the hospital through ambulances. Therefore, it is desirable to investigate a methodology for aggregating several patients' vital signs data and transferring them to the hospital while the ambulances carrying multiple patients are in transit. The core objective of our work presented in this paper is to enhance our previous work reported in [3] with the induction of IoT features. Our main focus is on the issue of transferring real-time vital signs of several patients in an ambulance to a remote hospital. This live transmission would allow the emergency room physicians in the hospital to be well prepared ahead of time to handle the patients who are on the way to hospitals.

3. Proposed IoT-Based Vital Signs Data Transfer System

In this section, we discuss the development of the IoT-based vital signs data transfer system as part of the overall MEDTOC system. Physiological vital signs data of patients can be monitored locally by several methods. Once the data are collected, they may be transferred to a remote location via a cellular network using Internet packet protocols. A working prototype model has been developed in this project. The prototype has been built around a physiological monitoring platform developed and marketed by Libelium, a Spanish electronics manufacturer [16]. The sensor board was identified as MySignals HW v2 as shown in Figure 1. This monitoring platform supports various physiological sensors such as pulse, oxygen in blood, airflow (breathing), body temperature, ECG, glucometer, galvanic skin response, blood pressure (sphygmomanometer), and patient position (accelerometer). The MySignals hardware is interfaced with the Arduino UNO board. The libraries for the MySignals hardware development platform were used to support data collection and manipulation [17]. For testing purposes, we wrote the code to read the patient's test temperature data under the open-source Arduino integrated development environment (IDE) software and upload it to the Arduino board attached to the MySignals hardware. The code reads temperature and writes to the Arduino's serial port.

ESP8286 is a system on chip (SoC) with Wi-Fi connectivity. The ESP8266 has an integrated TCP/IP protocol stack that can give any microcontroller access to the Wi-Fi network. In the prototype model of our proposed system, we interfaced the ESP8266 module with the Arduino module to read data from the Arduino's serial port and send them to the remote hospital server. The routines running on the Arduino board read patients' data and send them to the Arduino's serial port. The ESP8286 module then reads the data from the serial port and sends them to a user-defined TCP port.

In the proposed system, patients' real-time data are stored locally for a short time for the observation of onboard paramedics. The data are also displayed graphically on an LCD screen of the host computer attached to the MySignals hardware. We used Raspberry Pi 3 as a host computer. The Arduino board sends medical sensor data to the serial port of the host Raspberry Pi 3, which displays the received vital signs data on an LCD display attached to it in a graphical form. Figure 2 shows the connection for graphical representation. This way, the paramedics inside the ambulance can monitor the patients' health condition any time. Figure 3 shows the screenshot of a single patient's example temperature data. The patients' data can be anonymized. They can be identified by patient numbers.

For communicating the patients' vital data to the remote server, the ESP8286 module is programmed to read the patient's vital signs data from the MySignals' Arduino board and send to the in-ambulance Wi-Fi network. The other side of the in-ambulance Wi-Fi network is connected to the cellular network as shown in Figure 4. The remote hospital's server is connected to the cellular network. The server can receive vital signs data from multiple patients. As a proof of concept, we used two MySignals boards embedded with Arduino boards and ESP286 modules. Each unit transmits the vital signs data to the server's TCP socket. A Python script was written to read the data received at the socket. The received data are displayed at the server's screen using the Python's matplotlib library.

The hospital emergency room staff may observe the patients' vital signs generated from the ambulance in real time while the patients are in transit to the hospital's emergency room. The doctors can assess the patients' health conditions and may communicate with the paramedics inside the ambulance to stabilize the patients. Figure 5 shows test temperature data for two patients at the hospital server in Celsius plotted against time.

The MEDTOC system has been designed from the beginning to support multiple patients per ambulance. The initial MEDTOC protocols contained extensive aggregation support due to the fact that bus ambulances may be used in

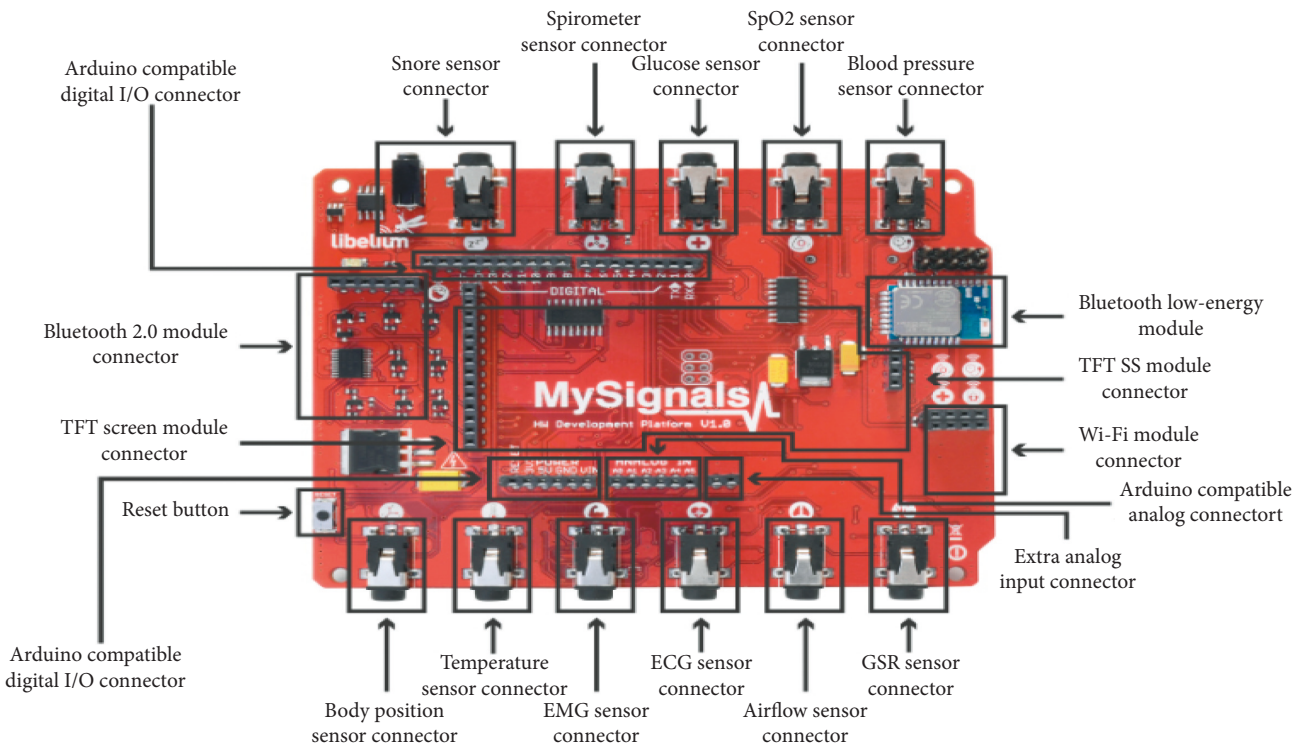

Figure 1: eHealth sensor board (source: MySignals website (http://www.my-signals.com/)).

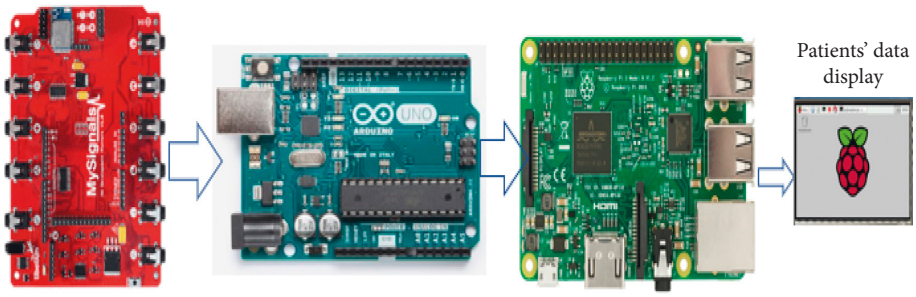

Figure 2: MySignals hardware interfaced with Arduino and Raspberry Pi 3 for patients' data display.

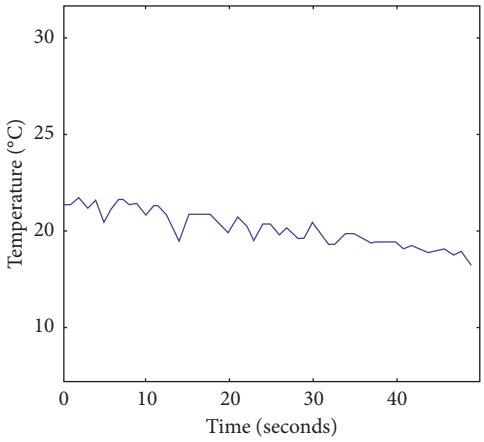

Figure 3: Temperature monitoring of a single patient.

disasters to transport a large number of victims rapidly to the nearest hospitals. The received data consist of aggregated vital signs of all the patients inside the ambulance. We have developed algorithms to aggregate and segregate the received data and send them to separate physicians. The MEDTOC system has several proposed components including medical sensors to gather the data, notebook computer to aggregate and optionally reduce the data, air gateway to transfer the data over the cellular network, web server integrated with a database to archive and present the data, and AI components to prioritize the data. Physicians carry portable devices with LCD displays which show the received patient data in a graphical format or in the form of visual charts.

In our enhanced MEDTOC system, the hospital server is simulated over a virtual machine running CentOS 7 Linux.

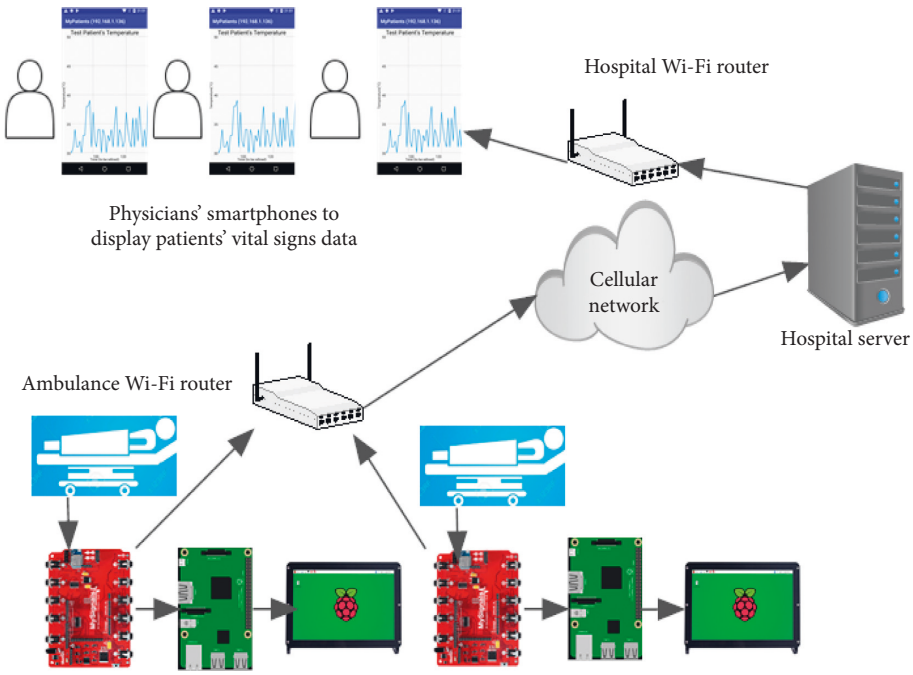

Figure 4: Connection of the ambulance Wi-Fi network with the cellular network.

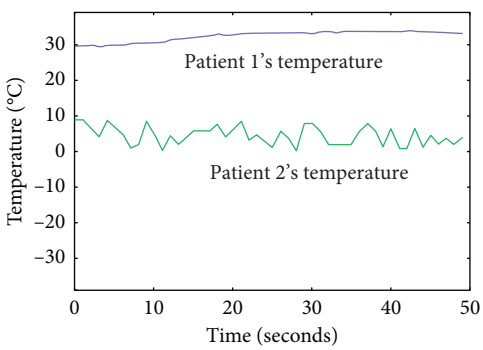

Figure 5: Patient data received on the server side.

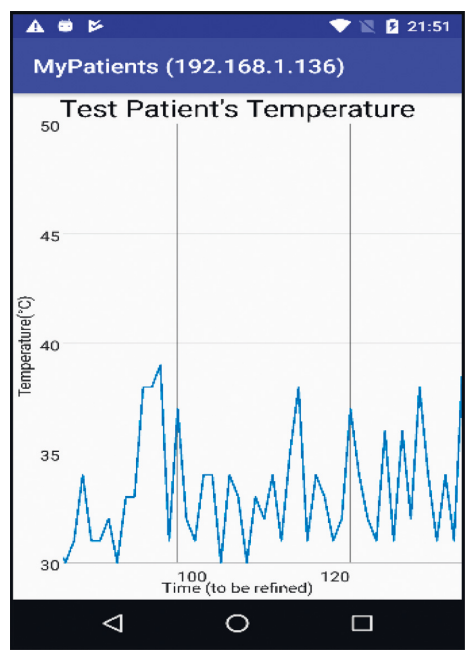

Figure 6: Temperature data on the physician's smartphone.

A MySQL database has been implemented in the hospital server to record the schedule of physicians. The database lists two fields: the physician's smart device IP address and the physician's duty schedule, i.e., "Present" or "Absent." Besides displaying patients' vital signs data on the server's screen, the hospital server forwards the incoming data to the on-duty physician's smartphone of the first available physicians whose status is found as "Present" in the MySQL database. A mobile app was developed to receive and display patients' temperature data on the physician's phone screen in a graphical format. We assume that the hospital's DHCP server assigns a specific IP address to the physician's smartphone. Whenever the doctor comes within the hospital's Wi-Fi range, his or her status is changed to "Available" in the MySQL database. If a physician's status in the database is found as "Available," the server routes the real-time patient's data to the physician's mobile device. All physicians with "Available" status will be running a mobile app which waits for these real-time data. The physician can be notified about the reception of the data by some alert intimation. Figure 6 shows a screenshot of the physician's smartphone displaying test temperature data.

It is likely that an available physician may be overwhelmed with several patients. Each physician may be able to accept "N" number of patients. Physiological data of the $(N+1)$th patient may be routed to another available physician if the number of patients assigned to available physician exceeds N. The hospital server's algorithm to receive data from the sensor board and to send data to the physician's mobile phone is shown as follows:

Proc_RcvSnd_Vital_Signs_data(Patient vital signs data, Physician schedule database)

{

Given: Vital signs data for **N** patients, Database for **M** physicians, Capacity **L** patients per physician

For (i = 1 to N)

{

Receive vital signs data of patient i and display in graphical format;

Connect to Physician schedule database $\sum$D

For (j = 1 to M)

{

Search for available physician by status (P, A, F)

For the next physician found with status P, change the status to F if (patients + 1 == L) // stop accepting more patients as the capacity // is reached

Record physician ID as a pair (T, Z)

where T = Title or ID of the physician

Z = *The MAC address of the physician's smart device*)

Alert the physician before arrival of data with audible beep

Start sending the vital signs data of patient i to the physician with status (P)

}

If no physician found to receive patient i's vital signs, send red alert to the hospital server

If there are some patients that have not been assigned to a hospital physician after running the RcvSnd_Vital_Signs_Data procedure, a search for additional nearby hospitals may be executed to find more hospital physicians and this procedure can be repeated. The complete extended search algorithm has been described in [18]. In short, the location-aware search algorithm interfaces with Google maps to convey the latitude and longitude of the disaster site. It uses the Google maps' public API to search and select three nearest hospitals within 50 km of the disaster site. For the extended search, the algorithm marks the location of the farthest hospital found in the initial search as the center of the extended search and finds three additional hospitals which may be within a maximum distance of 100 km from the disaster site.

4. Discussion of Results

We have studied the total bandwidth requirements of the proposed data transfer system in order to help the hospital network managers plan for disaster management support. The vital signs include BP, EKG, SpO2, HR, and TV which have specific bit rates when converted to digital domains. We assume N patients, M physicians, and K hospitals. We show an upper bound on the total data that would be collected and archived by the system for a mass disaster. Given the capacity of each physician is L number of patients to monitor at a given time, the vital sign rate in bits per second for a single patient can be expressed as follows:

$$\mathrm{VS} = \mathrm{BP} + \mathrm{EKG} + \mathrm{SpO2} + \mathrm{HR} + \mathrm{TV}. \tag{1}$$

Assuming N patients per disaster, M physicians per hospital, K hospitals involved in the disaster, and D as the average duration of a single patient's data transmission until the patient is taken into the care of a physician, the total data to be transmitted for the whole disaster have an upper bound as per the following equation:

$$D_{\max} = \sum_{i=1}^{N} ((\mathrm{VS}_i) * D). \tag{2}$$

Out of the total data $D_{\max}$, the average data handled per patient are obtained as follows:

$$D_{\mathrm{avg}} = \frac{D_{\max}}{N}. \tag{3}$$

The maximum data that can be handled by each physician's smart device, D_{p}, are then calculated as follows:

$$D_{\mathrm{p}} = \left[\frac{D_{\max}/K}{M}\right] * L, \tag{4}$$

where $D_{\max}$ = total data handled by the K hospitals per patient, K = number of hospitals, M = number of physicians per hospital, and L = limit in terms of number of patients per physician.

As mentioned in [3], the required bandwidth for vital signs of a single patient is 8,900 bps for the raw data. Assuming 10% overhead for TCP/IP-based transmission and a margin for additional vital signs, the required bandwidth per patient is adjusted to 10 kbps, which translates to 50 kbps for the mobile device of one physician. The data of five patients can be recorded in the smartphone of a physician for one hour in about a 22 MB size file. This rate and the disk space needed are easily manageable given the current technologies of storage and networking.

An important feature for the safety and well-being of patients is the capability of handling multiple patients with push notification for the situation in which the values of vital signs cross certain thresholds for one or more of them. Since the smart device of each physician is receiving the vital signs of multiple patients in transit, it is possible to make sure that any changing condition of a patient is captured by thresholding analysis of the most recent data received. It would allow the physician to focus on emergency notifications for specific patients whose conditions have deteriorated enabling the issue of timely advice to the paramedics. The data streaming to the physician's mobile device stops upon the patient's arrival to the hospital. The streamed data are dealt with according to patients' data protection policy in force.

The central server's task of matching patients to physicians uses a special patient assignment algorithm. It depends on the 3 tuples $\{L, C, S\}$, where L is the current load of the physician, C is the class of physician, and S is the current status of the patient as ascertained by the paramedics and the vital signs data. The matching under these parameters would

result in a much smoother and effective patient handling especially in mass disasters.

5. Conclusion

Disasters have the common characteristics of sudden occurrence and unexpected or remote location. Many disasters happen at considerable distance from hospitals with trauma facilities. Therefore, the first responders' only option is to use their own medical knowledge to stabilize the victims and to carry them as fast as possible to the nearest hospital where qualified and experienced emergency room physicians can provide needed care. This paper has discussed the development of an IoT-based real-time vital signs transfer system for victims of mass disasters and emergencies. This system is developed as the real-time component of MEDTOC, a holistic solution for managing the mass disasters and emergencies. The real-time vital signs transfer fills a gap in the overall management of disasters. The proposed vital signs transfer system is a humble contribution to enable saving lives by providing the vital signs of the affected people to emergency room physicians even when the patients are still in on-site triage or on their way to the hospital. This system has been built around the MySignals hardware platform, and it uses the IoT and prevalent cellular network infrastructure to facilitate the transfer and display of vital signs. The system can be enhanced with data mining algorithms to issue push notifications for patients whose conditions deteriorate on the way to the hospital. Another suggested feature is to transfer the data of a patient with encryption or without patient identification information to a central database on arrival to the hospital.

The proposed system is based upon the assumption that cellular connectivity is available during disaster situations because the disaster could be of various types. For example, massive food poisoning does not affect the cellular infrastructure. If the cellular infrastructure is impaired due to the disaster, then alternate connectivity such as Wi-Fi direct can be investigated as future work.

Data Availability

All data used in the experiment were test data not drawn from any other source.

Conflicts of Interest

The authors declare that they have no conflicts of interest.

Acknowledgments

The authors would like to thank the Deanship of Scientific Research at Umm Al-Qura University, Makkah, Saudi Arabia, for supporting this work by grant number 15-ENG-3-1-0008. Appreciations are also due to Ayaz Ahmed of Waadi Makkah, Saudi Arabia, for his help in prototype development. The authors also extend their appreciations to Talha Ahmad and Syeda Wajiha Maryam for developing the mobile app for this project.

References

[1] American College of Surgeons, *ATLS-Advanced Trauma Life Support Program for Doctors*, AmericanCollege of Surgeons, Chicago, IL, USA, 2008, ISBN 978-1880696316.

[2] J. Höller, V. Tsiatsis, C. Mulligan, S. Karnouskos, S. Avesand, and D. Boyle, *From Machine-to-Machine to the Internet of Things: introduction to a New Age of Intelligence*, Elsevier, Amsterdam, Netherlands, 2014.

[3] J. A. Zubairi, S. Misbahuddin, and I. Tasadduq, *Emergency Medical Data Transmission Systems And Techniques, Chapter XI, Handbook of Research on Advances in Health Informatics and Electronic Healthcare Applications: Global Adoption and Impact of Information Communication Technologies*, IGI Global Publishing, Hershey, PA, USA, 2009, ISBN-13: 978-1605660301.

[4] J. Zubairi and S. Idwan, "Smart patient assignment algorithms for disasters," *Elsevier ICT Express Journal*, vol. 4, no. 2, pp. 107–111, 2018.

[5] S. Pavlopoulos, E. Kyriacou, A. Berler, S. Dembeyiotis, and D. Koutsouris, "A novel emergency telemedicine system based on wireless communication technology–AMBULANCE," *IEEE Transactions on Information Technology in Biomedicine*, Special Issue on Emerging Health Telematics Applications in Europe, vol. 2, no. 4, pp. 261–267, 1998.

[6] D. Bragg, M. Yun, H. Bragg, and H. Choi, "Intelligent transmission of patient sensor data in wireless hospital networks," in *Proceedings of AMIA Annual Symposium*, Chicago, IL, USA, November 2012.

[7] Y. Ren, N. Pazzi, and A. Boukerche, "Monitoring patients via a secure and mobile healthcare system," *IEEE Wireless Communications*, vol. 17, no. 1, pp. 59–65, 2010.

[8] M. Sillesen, M. S. Ripa, S. Strange et al., "Telemedicine in the transmission of prehospitalisation EKGs of patients with suspected acute myocardial infarction," *Ugeskr Laeger*, vol. 168, no. 11, pp. 1133–6, 2006.

[9] H. Fatmi, S. Hussain, and A. Al-Rubaie, "Secure and cost-effective remote monitoring health-guard system," in *Proceedings of 2017 IEEE Canada International Humanitarian Technology Conference (IHTC)*, Toronto, Canada, July 2017.

[10] R. Iancu-Constantin, L. D. Serbanati, C. Chera, I.-D. GheorghePop, and B. Ertl, "An E-health approach for remote cardiac rehabilitation," in *Proceedings of 20th International Conference on Control Systems and Science*, IEEE, Bucharest, Romania, August 2015.

[11] L. J. V. Escobar and S. A. Salinas, "E-health prototype system for cardiac telemonitoring," in *Proceedings of 38th Annual International Conference of the IEEE Engineering in Medicine and Biology Society (EMBC)*, Lake Buena Vista (Orlando), Florida USA, August 2016.

[12] M. S. Jassas, A. A. Qasem, and Q. H. Mahmoud, "A smart system connecting e-health sensors and the Cloud," in *Proceedings of IEEE 28th Canadian Conference on Electrical and Computer Engineering*, Halifax, Canada, May 2015.

[13] C. O. Rolim, F. L. Koch, C. B. Westphall, J. Werner, A. Fracalossi, and G. S. Salvador, "A cloud computing solution for patient's data collection in health care institutions," in *Proceedings of 2010 Second International Conference on eHealth, Telemedicine, and Social Medicine*, St. Maarten, Netherlands Antilles, February 2010.

[14] S. M. Riazul Islam et al., "The internet of things for health care: a comprehensive survey," *IEEE Access*, vol. 3, pp. 678–708, 2015.

[15] L. Yang, S. H. Yang, and L. Plotnick, "How the internet of things technology enhances emergency response operations," *Technological Forecasting and Social Change*, vol. 80, no. 9, pp. 1854–1867, 2013.
[16] IoT parts and possibilities, http://www.cooking-hacks.com.
[17] Products, education and resources, http://www.arduino.cc.
[18] S. Idwan and J. Zubairi, "Load balancing for disaster recovery and management," *Springer Wireless Personal Communications Journal*, vol. 90, no. 1, pp. 369–379, 2016.