Hindawi
Journal of Control Science and Engineering
Volume 2019, Article ID 4641289, 10 pages
https://doi.org/10.1155/2019/4641289

Research Article

Design and Advanced Control of Intelligent Large-Scale Hydraulic Synchronization Lifting Systems

Lijing Dong,[1] **Mingfu Qiu**,[1] **and Sing Kiong Nguang**[2]

[1]*School of Mechanical, Electronic and Control Engineering, Beijing Jiaotong University, Beijing 100044, China*
[2]*The Department of Electrical and Computer Engineering, The University of Auckland, Private Bag, 92019 Auckland, New Zealand*

Correspondence should be addressed to Lijing Dong; donglj@bjtu.edu.cn

Received 22 May 2019; Revised 1 September 2019; Accepted 9 September 2019; Published 29 September 2019

Academic Editor: Radek Matušů

Lifting systems are in great demand since more and more massive buildings or bridges tend to be shifted or lifted integrally. Hydraulic cylinders in traditional lifting systems are usually supplied by a common pump with an oil tank, which brings long distance hydraulic pipes and signal lines. This paper designs a new architecture of an intelligent lifting system, with self-contained hydraulic power supply system, wireless communication modules, and distributed controller. Based on the designed architecture of the intelligent lifting system, an advanced iterative learning control strategy is proposed to enhance its synchronization performance. With the proposed advanced control strategy, synchronization is achieved in a finite time interval even under the effect of communication time delays and saturations. The distributed controller of a lifting subsystem only uses the delayed information received from subsystems around. This is distinguished from traditional lifting systems, in which all of the lifting subsystems are normally controlled in a centralized way.

1. Introduction

In recent years, there have been many applications of hydraulic lifting systems for buildings or bridges' maintenance or movement while keeping their structural integrity [1]. A hydraulic lifting system usually consists of several lifting subsystems. In order to guarantee the safety of lifting process and avoid tilting or even capsizing, the most important indicator of the lifting performance is synchronization of the lifting subsystems.

To achieve high-precision synchronization, many researchers have done significant work, and there have been some relative research results. Zhang et al. [2] propose a scheme of multicylinder synchronous lifting system, which included 32 hydraulic subsystems. In this system, every 8 hydraulic subsystems are supplied by a common pump station. In Ref. [3], the authors design a master-slave mechanism solution for the synchronous hydraulic system from the hardware aspect. The communication between the master hydraulic control system and the slave systems is realized by PROFIBUS-DP. All of the hydraulic systems directly receive control signals from the server station through long wires. At the same time, the hydraulic oil for all the lifting systems is supplied through pipe lines from a centralized pump station. This is reasonable when lifting a small building, and all of the hydraulic subsystems are deployed in a compact area. However, for the applications of lifting massive bridges/buildings, the lifting system usually contains numerous hydraulic lifting subsystems and is deployed in a large-scale area. It is apparent that for these applications, the traditional centralized controlled structure is no longer applicable. This requires a distributive control scheme and self-contained hydraulic lifting subsystems, which communicate through wireless data transfer units (DTUs).

At present, the wireless communication technique and networked control technique have developed with high speed. This makes it realizable to replace the long wires with wireless data transfer units in large-scale hydraulic synchronization lifting systems. In addition, the advanced

manufacturing technique facilitates production of integrated intelligent hydraulic lifting systems. Therefore, intelligent lifting system architecture composed of self-contained hydraulic lifting subsystems which are equipped with DTUs and distributed controllers is the trend of development and is realizable by modern techniques [4, 5].

The above practical applications and development trends motivate the research work in this paper. Therefore, in this paper, the authors design an intelligent hydraulic synchronization lifting system architecture, where hydraulic lifting subsystems are equipped with wireless DTUs and deployed in an extensive region. The lifting subsystems could access information of other subsystems within the communication range. Each lifting subsystem calculates its control output using received information. Through the coupling of neighbouring information, subsystems gradually reach synchronization based on the condition that the communication topology is connected. Then, the mathematical model of a lifting subsystem is established based on existing literature studies about valve-controlled cylinders [6]. The mathematical model of the entire lifting system is established based on the complex system theory [7–9]. In this model, the coupling of lifting subsystems' information interacted through DTUs is also considered.

In terms of a separate hydraulic cylinder system, it is able to achieve satisfactory control performance even with a simple PID controller. In fact, many experiments are conducted with the PID controller [10]. Nevertheless, for large-scale synchronization lifting systems, the controller is designed with local acquired information from neighbouring subsystems in a distributive way [11]. Specifically, the local information is acquired through DTUs instead of receiving reference signals directly from a centralized control station. Moreover, time delays are not avoidable in a practical system [12–14]. To deal with the teleoperated hydraulic lifting systems working with delayed communication networks, Maddahiet al. [15] proposed a master-slave control structure. The simple PID controller cannot guarantee synchronization of the lifting subsystems with time delays in the whole lifting process. Thus, we propose an iterative learning distributed controller for each hydraulic subsystem in the large-scale lifting system. The iterative controller is an advanced control technique for improving the synchronization response in systems that repeatedly track a given reference signal or operation [16–18].

To the best of our knowledge, for a hydraulic lifting system, the iterative learning distributed controller designed with local information transferred by DTUs from around intelligent hydraulic lifting subsystems has not been presented in the literature. The rest of this paper is presented as follows: Section 2 addresses the designed intelligent lifting system and analyzes its working principle, based on which the mathematical model is established. The advanced distributed iterative controller for designed large-scale intelligent lifting system is presented in Section 3. Then, the synchronization analysis of the overall lifting system with designed iterative controller is explored in Section 4. Finally, Section 5 carries out simulations and comparisons to illustrate the effectiveness and feasibility of the designed intelligent lifting system and proposed advanced iterative controller.

2. Scheme and Mathematical Model of Intelligent Hydraulic Lifting Systems

2.1. Scheme of Designed Intelligent Hydraulic Lifting System. In this paper, the authors design a scheme of intelligent hydraulic lifting systems. As described in Figure 1, several intelligent hydraulic lifting subsystems hold a common heavy load. All of the hydraulic subsystems are expected to lift the heavy load synchronously in order to avoid damage or even capsizing caused by tilting torque. Except general hydraulic components, each intelligent lifting subsystem is also equipped with a displacement sensor for obtaining current lifting status, a wireless data transfer unit for transferring its status to neighbouring subsystems, and a distributed controller for computing the control value using received local information. Furthermore, the hydraulic subsystem is self-contained with an independent pump rather than pumped by a centralized oil station.

Since the intelligent lifting subsystems are equipped with DTUs, they can interact with neighbouring subsystems; afterwards, the communication topology is formed. In the proposed intelligent hydraulic lifting system, the one nearest to the work station is defined as a leading cylinder and receives the reference signal directly from the server station. On the contrary, all the other lifting subsystems are defined as followers and are not connected to the station.

If the wireless DTU of the intelligent hydraulic subsystem (i) can exchange information with another (j), then they are set as neighbours. The notation $a_{ij} = a_{ji} > 0$ represents that subsystems (i) and (j) are connected, and its value stands for the connection weight, while $a_{ij} = a_{ji} = 0$ denotes that subsystems (i) and (j) are not connected and cannot exchange information. Another notation $d_i > 0$ represents that subsystem (i) can obtain information from the leading subsystem. Otherwise, $d_i = 0$. Assume that the lifting system consists of N hydraulic lifting subsystems. Then, the Laplacian matrix of communication topology is $\mathscr{L}_{\mathscr{G}} = [l_{ij}] \in \mathbb{R}^{N\times N}$, in which $l_{ii} = \sum_{j=1}^{N} a_{ij}$ and $l_{ij} = -a_{ij}$. Denote $\mathscr{D}_{\mathscr{G}} = \mathrm{diag}\{d_1, d_2, \ldots, d_n\}$. Then, the Laplacian matrix reflecting the communication topology with the leading subsystem is extended as $\mathscr{L}_{\mathscr{G}} + \mathscr{D}_{\mathscr{G}}$.

The notations used throughout this paper are listed in Table 1.

2.2. Mathematical Model of Designed Intelligent Lifting System. This section establishes the mathematical model of the designed lifting system. From the scheme of the intelligent lifting system as shown in Figure 1, it is easy to conclude that the lifting subsystem is mainly a valve-controlled cylinder. The dynamics of the cylinder is

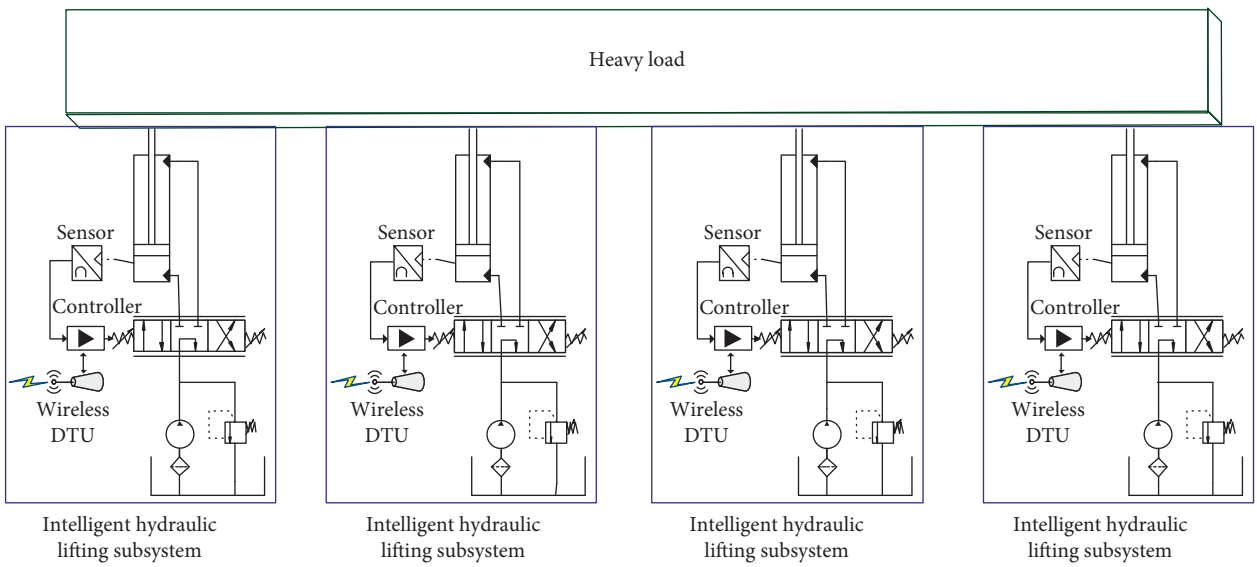

Figure 1: The scheme of designed intelligent hydraulic lifting system.

Table 1: Nomenclature.

Q_L	The load flow (m^3/s)	m_p	The cylinder mass (kg)
K_a	The flow coefficient in terms of equivalent area (m^3/s)/(m^2)	F_g	The output force of the cylinder (N)
A_e	The equivalent area (m^2)	β_e	The bulk modulus of the fluid being used (Pa)
K_c	The flow-pressure coefficient ((m^3/s)/Pa)	m_L	The load mass (kg)
p_L	The load pressure (Pa)	$B = B_c + B_L$	The viscous friction coefficient (Nm/s)
A_c	The annulus area of the cylinder (m^2)	$\lVert \cdot \rVert$	The Euclidean norm
y	The piston displacement of the cylinder (m)	$\lVert \cdot \rVert_\infty$	Maximum norm
C_{tc}	The fluid leakage coefficient ((m^3/s)/Pa)	$\otimes$	Kronecker product
V_t	The volume (m^3)		

$$Q_L = K_a A_e - K_c p_L,$$

$$Q_L = A_c \frac{dy}{dt} + C_{tc} p_L + \frac{V_t}{4\beta_e} \cdot \frac{dp_L}{dt}, \tag{1}$$

$$F_g = A_c p_L = \left(m_p + m_L\right) \frac{d^2 y}{dt^2} + \left(B_c + B_L\right) \frac{dy}{dt}.$$

Furthermore, we denote

$$x = \begin{bmatrix} y \\ \dot{y} \\ \ddot{y} \end{bmatrix},$$

$$A = \begin{bmatrix} 0 & 1 & 0 \\ 0 & 0 & 1 \\ 0 & -\dfrac{4\beta_e A_c^2}{V_t m} & \dfrac{4K_c\beta_e}{V_t} \end{bmatrix},$$

$$B = \begin{bmatrix} 0 \\ 0 \\ \dfrac{4K_a\beta_e A_c}{V_t m} \end{bmatrix}, \tag{2}$$

$$C = \begin{bmatrix} 1 \\ 0 \\ 0 \end{bmatrix}.$$

Then, we reorganize the mathematical model in a compact form:

$$\begin{aligned} \dot{x} &= Ax + BA_e + f, \\ y &= Cx, \end{aligned} \tag{3}$$

where f denotes the nonlinear part of the system, which could be caused by friction or external disturbances. In addition, nonlinear function f satisfies the following assumptions.

Assumption 1 [19]. The nonlinear function $f(\cdot)$ satisfies the Lipschitz condition with respect to x over the time interval $[0, T]$.

$$\left\| f(x_1, t) - f(x_2, t) \right\| \le l_f \left\| x_1 - x_2 \right\|, \tag{4}$$

where l_f is the Lipschitz constant.

In practical applications, the physical control variable is a voltage or current signal, which linearly correlates with the equivalent area A_e. Therefore, a proportional coefficient K_u is introduced to construct the relationship between the actual control variable and the equivalent area A_e, i.e., $u = K_u A_e$. Then, dynamics of the leading subsystem is reconstructed as

$$\begin{aligned} \dot{x}_0(t) &= Ax_0(t) + Bu_0(t) + f(x_0, t), \\ y_0(t) &= Cx_0(t), \end{aligned} \tag{5}$$

where $x_0 \in \mathbb{R}^3$ represents the state of the leading subsystem, $u_0 \in \mathbb{R}$ denotes the controller, and $y_0 \in \mathbb{R}$ stands for the lifting height of the leading subsystem's hydraulic cylinder.

Similarly, the dynamics of the ith lifting subsystem is

$$\begin{aligned} \dot{x}_i(t) &= Ax_i(t) + Bu_i(t) + f(x_i, t), \\ y_i(t) &= Cx_i(t), \end{aligned} \tag{6}$$

where $x_i \in \mathbb{R}^3$, $y_i \in \mathbb{R}$ represent the state and lifting height of the ith lifting subsystem, respectively, and $u_i \in \mathbb{R}$ denotes the distributed controller of ith lifting subsystem, which will be designed in the following section.

The objective of a lifting system is that all of the lifting subsystems move synchronously considering the nonlinear effect caused by load disturbance or other issues, i.e., in this paper, all of the following hydraulic lifting subsystems follow the movement of the leading subsystem. To achieve this objective, an advanced control strategy is proposed.

3. Advanced Iterative Controller Design for Lifting Systems with Communication Time Delays

In this section, the synchronization problem of hydraulic lifting systems with communication delays is explored. A distributed iterative learning controller (ILC) with delayed information received from around intelligent hydraulic subsystems is presented, with which synchronization is achieved within finite time interval even under unsatisfactory communication circumstances. Let $\tau_{ij}(t)$ be the communication time delay between the ith hydraulic lifting subsystem and the jth subsystem. j stands for the around lifting subsystems within the ith lifting subsystem's communication range. Denote $\tau(t) = \max\left\{\tau_{ij}(t),\ i \in \mathcal{N}\right\}$ as the maximum possible communication time delay between intelligent lifting subsystems at time t. In addition, $\tau(t)$ is assumed to be varying between $[\check{\tau}, \hat{\tau} - \delta_\tau]$, in which $\check{\tau}$, $\hat{\tau}$, and δ_τ are constants.

As illustrated in Figure 2, each lifting hydraulic subsystem is controlled by an independent controller with information detected from subsystems around. An iterative controller (7) for the ith intelligent lifting subsystem is designed for the synchronization objective. For a valve-controlled hydraulic cylinder, input saturation exists since the spool displacement suffers saturation. Thereafter, the ILC algorithm is designed considering the input saturation. As described in (7), the controller not only evolves in time domain t but also iterates with respect to the iteration domain k.

$$\begin{aligned} v_{i,k+1}(t) = u_{i,k}(t) + \gamma_i \Bigg\{ & \sum_{j \in \mathcal{N}_i} a_{ij} \Big[\big(y_{j,k}(t - \tau(t)) - y_{i,k}(t - \tau(t)) \big) - \big(y_{j,k}(t - \hat{\tau}) - y_{i,k}(t - \hat{\tau}) \big) \Big] \\ & + d_i \Big[\big(y_0(t - \tau(t)) - y_{i,k}(t - \tau(t)) \big) - \big(y_0(t - \hat{\tau}) - y_{i,k}(t - \hat{\tau}) \big) \Big] \Bigg\}, \\ u_{i,k+1}(t) = \operatorname{sat}\big(& v_{i,k+1}(t) \big). \end{aligned} \tag{7}$$

where $\operatorname{sat}(\cdot)$ describes the input saturation function with saturation value δ, which is defined as

$$\operatorname{sat}(v) = \begin{cases} v, & |v| \le \delta, \\ \dfrac{v}{|v|}\delta, & |v| > \delta. \end{cases} \tag{8}$$

As presented in designed controller (7), the information from around lifting subsystems at time $t - \hat{\tau}$ and $t - \tau(t)$ is adopted, which makes the synchronization performance depend on the estimation of the time delay bound. Then, why $t - \hat{\tau}$ not $t - \check{\tau}$? This is because at time t, the information received by the lifting subsystem i is actually $y(t - \tau(t))$. Since $\check{\tau} < \tau(t) < \hat{\tau}$, it is easy to know that $y(t - \check{\tau})$ is not available at time t. However, $y(t - \check{\tau})$ is available by searching the history of received data.

For the sake of analysing the performance of the lifting subsystems as an entire system, we denote $x_k = (x_{1,k}^T, x_{2,k}^T, \ldots, x_{N,k}^T)^T$, $u_k = [u_{1,k}, u_{2,k}, \ldots, u_{N,k}]^T$, $y_k = [y_{1,k}, y_{2,k}, \ldots, y_{N,k}]^T$. The lifting synchronization error with respect to

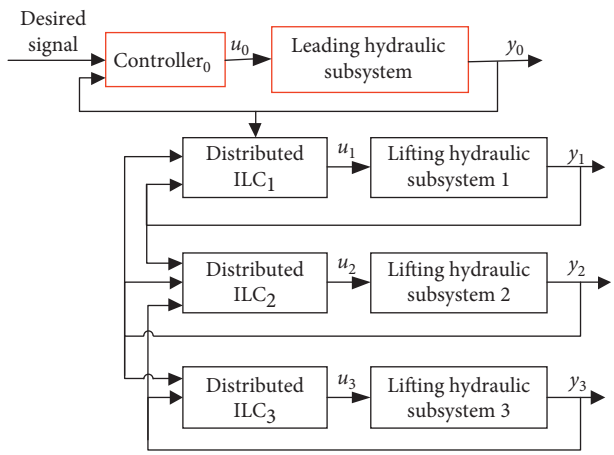

Figure 2: Illustration of the proposed distributed control strategy.

iteration k is $\tilde{y}_k(t) \triangleq 1_n \otimes y_0(t) - y_k(t)$. Then, according to (7), the overall controller at iteration k is deduced to a compact form:

$$\begin{aligned} v_{k+1}(t) &= u_k(t) + \Gamma(\mathscr{L}_{\mathscr{G}} + \mathscr{D}_{\mathscr{G}})[\tilde{y}_k(t-\tau(t)) - \tilde{y}_k(t-\hat{\tau})], \\ u_{k+1}(t) &= \operatorname{sat}(v_{k+1}(t)), \end{aligned} \tag{9}$$

where $\Gamma = \operatorname{diag}\{\gamma_1, \gamma_2, \ldots, \gamma_n\}$.

Remark 1. In terms of the case where the bottom of the weight is uneven, we can assume that the difference between the length of the rod that each agent extends and the length of the rod that leader extends is e_i. The matrix of all agents' rod extension lengths is expressed as e. Then, the lifting synchronization error with respect to iteration k can be described as $\tilde{y}_k(t) \triangleq 1_n \otimes y_0(t) - y_k(t) - e$. Because the difference e is constant in the whole process of weightlifting, the whole operation process still satisfies the controllable strategy proposed in this paper.

The overall error of control inputs between lifting subsystems and the designated control input is

$$\begin{aligned} \tilde{v}_{k+1}(t) = 1_n \otimes u_0(t) - v_{k+1}(t) = \tilde{u}_k(t) - \Gamma(\mathscr{L}_{\mathscr{G}} + \mathscr{D}_{\mathscr{G}}) \\ \cdot [\tilde{y}_k(t-\tau(t)) - \tilde{y}_k(t-\hat{\tau})]. \end{aligned} \tag{10}$$

Using the fact that

$$\tilde{y}_k(t-\tau(t)) - \tilde{y}_k(t-\hat{\tau}) = \int_{t-\hat{\tau}}^{t-\tau(t)} \dot{\tilde{y}}_k(\sigma)\mathrm{d}\sigma, \tag{11}$$

equation (10) can be expressed as

$$\tilde{v}_{k+1}(t) = \tilde{u}_k(t) - \Gamma(\mathscr{L}_{\mathscr{G}} + \mathscr{D}_{\mathscr{G}}) \int_{t-\hat{\tau}}^{t-\tau(t)} \dot{\tilde{y}}_k(\sigma)\mathrm{d}\sigma. \tag{12}$$

The state error is $\tilde{x}_k(t) = 1_n \otimes x_0(t) - x_k(t)$. Considering the mathematical model of lifting subsystems at time t, the lifting error system can be formulated in a compact form:

$$\begin{aligned} \dot{\tilde{x}}_k(t) &= \mathscr{A}\tilde{x}_k(t) + \mathscr{B}\tilde{u}_k(t) + f(\tilde{x}_k(t), t), \\ \tilde{y}_k(t) &= \mathscr{C}\tilde{x}_k(t), \end{aligned} \tag{13}$$

where $\mathscr{A} = 1_n \otimes A$, $\mathscr{B} = 1_n \otimes B$, and $\mathscr{C} = 1_n \otimes C$.

Before analysing the lifting synchronization condition, it is necessary to introduce an important Lemma 1.

Lemma 1 [20] (Bellman–Gronwall). *Over time interval [0, T], if some constants $a \geq 0, b \geq 0$, and some nonnegative piecewise-continuous function $x(t)$, $y(t)$ satisfying*

$$x(t) \leq c + \int_0^t (ax(\theta) + by(\theta))\mathrm{d}\theta, \tag{14}$$

then,

$$x(t) \leq ce^{at} + \int_0^t e^{a(t-\theta)} by(\theta)\mathrm{d}\theta. \tag{15}$$

4. Synchronization Analysis of Lifting Systems with Communication Time Delays

Theorem 1. *Consider the intelligent lifting subsystems (6) and (5) with distributed iterative controller (7), if the following condition satisfies*

$$\left\| I - \delta_\tau \Gamma(\mathscr{L}_{\mathscr{G}} + \mathscr{D}_{\mathscr{G}})\mathscr{C}\mathscr{B} \right\|_\infty < 1. \tag{16}$$

The lifting synchronization is achieved in finite time $[0, T]$.

Proof. The initial cylinder positions of cylinders in all of the lifting subsystems are assumed to be identical, implying $\tilde{x}_k(0) = 0$. Afterwards, the state error equation is

$$\tilde{x}_k(t) = \int_0^t (\mathscr{A}\tilde{x}_k(\theta) + \mathscr{B}\tilde{u}_k(\theta) + f(\tilde{x}_k(\theta), \theta))\mathrm{d}\theta. \tag{17}$$

In light of Assumption 1 and taking $\|\cdot\|_\infty$ norm on both sides of equation (17), we have

$$\|\tilde{x}_k(t)\|_\infty \leq \int_0^t \left(\alpha\|\tilde{x}_k(\theta)\|_\infty + \|\mathscr{B}\|_\infty \|\tilde{u}_k(\theta)\|_\infty\right)\mathrm{d}\theta, \tag{18}$$

where $\alpha = \|\mathscr{A}\|_\infty + l_f$.

In order to get the relationship between $\tilde{x}_k$ and $\tilde{u}_k$ through eliminating $\tilde{x}_k$ at the right hand side of (18), Lemma 1 is adopted.

$$\|\tilde{x}_k(t)\|_\infty \leq \int_0^t \left(\|\mathscr{B}\|_\infty \|\tilde{u}_k(\theta)\|_\infty\right) e^{\alpha(t-\theta)}\mathrm{d}\theta. \tag{19}$$

Through multiplying $e^{-\lambda t}, \lambda > \alpha$, it is able to convert the $\|\cdot\|_\infty$ norm into $\|\cdot\|_\lambda$ norm:

$$\begin{aligned} \|\tilde{x}_k(t)\|_\lambda &\leq \sup_{t\in[0,T]} \left\{ \int_0^t \|\mathscr{B}\|_\infty e^{(\alpha-\lambda)(t-\theta)}\mathrm{d}\theta \right\} \|\tilde{u}_k(t)\|_\lambda \\ &\leq \frac{\|\mathscr{B}\|_\infty}{\lambda - \alpha}\left(1 - e^{(\alpha-\lambda)T}\right)\|\tilde{u}_k(t)\|_\lambda. \end{aligned} \tag{20}$$

Next, we will get the constraint on $\|\tilde{u}_k(t)\|_\lambda$. Substitution of the overall dynamic equation of the lifting synchronization error (13) into (12) gives rise to

$$\begin{aligned}\tilde{v}_{k+1}(t) = \tilde{u}_k(t) - \Gamma(\mathscr{L}_{\mathscr{G}} + \mathscr{D}_{\mathscr{G}}) \int_{t-\tau(t)}^{t-\hat{\tau}} [\mathscr{C}\mathscr{A}\tilde{x}_k(\sigma) \\ + \mathscr{C}\mathscr{B}\tilde{u}_k(\sigma) + \mathscr{C}(f(\tilde{x}_k, \sigma))]\mathrm{d}\sigma.\end{aligned} \tag{21}$$

Since the objective is to ensure the convergence of the synchronization error of the large-scale lifting system, some simple manipulations on $\tilde{u}_k(t)$ are implemented, after which it has

$$\begin{aligned}\tilde{v}_{k+1}(t) = [I - (\hat{\tau} - \tau(t))\Gamma(\mathscr{L}_{\mathscr{G}} + \mathscr{D}_{\mathscr{G}})\mathscr{C}\mathscr{B}]\tilde{u}_k(t) \\ - \Gamma(\mathscr{L}_{\mathscr{G}} + \mathscr{D}_{\mathscr{G}}) \int_{t-\hat{\tau}}^{t-\tau(t)} [\mathscr{C}\mathscr{A}\tilde{x}_k(\sigma) \\ + \mathscr{C}\mathscr{B}(\tilde{u}_k(\sigma) - \tilde{u}_k(t)) \\ + \mathscr{C}(f(1_n \otimes x_0, t) - f(x_k(t), t))]\mathrm{d}\sigma.\end{aligned} \tag{22}$$

From the expression of controller (9), it is obvious that $\|\tilde{u}_{k+1}(t)\|_\infty \le \|\tilde{v}_{k+1}(t)\|_\infty$. Then, imposing the norm $\|\cdot\|_\infty$ on equation (22) and in light of the Lipschitz condition on external load disturbance, we obtain

$$\begin{aligned}\|\tilde{u}_{k+1}(t)\|_\infty \le \|I - (\hat{\tau} - \tau(t))\Gamma(\mathscr{L}_{\mathscr{G}} + \mathscr{D}_{\mathscr{G}})\mathscr{C}\mathscr{B}\|_\infty \|\tilde{u}_k(t)\|_\infty \\ + \|\Gamma(\mathscr{L}_{\mathscr{G}} + \mathscr{D}_{\mathscr{G}})\mathscr{C}\|_\infty (\|\mathscr{A}\|_\infty + l_f) \int_{t-\hat{\tau}}^{t-\tau(t)} \|\tilde{x}_k(\sigma)\|_\infty \mathrm{d}\sigma \\ + \|\Gamma(\mathscr{L}_{\mathscr{G}} + \mathscr{D}_{\mathscr{G}})\mathscr{C}\mathscr{B}\|_\infty \\ \cdot \left[\int_{t-\hat{\tau}}^{t-\tau(t)} \|\tilde{u}_k(\sigma)\|_\infty \mathrm{d}\sigma + \int_{t-\hat{\tau}}^{t-\tau(t)} \|\tilde{u}_k(t)\|_\infty \mathrm{d}\sigma\right].\end{aligned} \tag{23}$$

Considering the fact that the valve-controlled hydraulic cylinder suffers saturation effect, i.e., $\|\tilde{u}_k(t)\|_\infty \le 2\delta$, the above inequality (23) can be rearranged:

$$\begin{aligned}\|\tilde{u}_{k+1}(t)\|_\infty \le \|I - (\hat{\tau} - \tau(t))\Gamma(\mathscr{L}_{\mathscr{G}} + \mathscr{D}_{\mathscr{G}})\mathscr{C}\mathscr{B}\|_\infty \|\tilde{u}_k(t)\|_\infty \\ + \|\Gamma(\mathscr{L}_{\mathscr{G}} + \mathscr{D}_{\mathscr{G}})\mathscr{C}\|_\infty (\|\mathscr{A}\|_\infty + l_f) \int_{t-\hat{\tau}}^{t-\tau(t)} \|\tilde{x}_k(\sigma)\|_\infty \mathrm{d}\sigma \\ + 4\delta(\hat{\tau} - \check{\tau})\|\Gamma(\mathscr{L}_{\mathscr{G}} + \mathscr{D}_{\mathscr{G}})\mathscr{C}\mathscr{B}\|_\infty.\end{aligned} \tag{24}$$

Substituting (19) into (24) and converting the $\|\cdot\|_\infty$ norm into $\|\cdot\|_\lambda$ norm by multiplying $e^{-\lambda t}, \lambda > \alpha$, then the following inequality holds:

$$\begin{aligned}\|\tilde{u}_{k+1}(t)\|_\lambda \le \|I - (\hat{\tau} - \tau(t))\Gamma(\mathscr{L}_{\mathscr{G}} + \mathscr{D}_{\mathscr{G}})\mathscr{C}\mathscr{B}\|_\infty \|\tilde{u}_k(t)\|_\lambda \\ + \sup_{t\in[0,T]} \left\{\alpha\|\Gamma(\mathscr{L}_{\mathscr{G}} + \mathscr{D}_{\mathscr{G}})\mathscr{C}\|_\infty \int_{t-\hat{\tau}}^{t-\tau(t)} \right. \\ \left. \cdot \left[\int_0^t (\|\mathscr{B}\|_\infty \|\tilde{u}_k(\theta)\|_\infty) e^{-\lambda\theta} e^{(\alpha-\lambda)(t-\theta)} \mathrm{d}\theta\, \mathrm{d}\sigma\right]\right\} \\ + 4\delta(\hat{\tau} - \check{\tau})\|\Gamma(\mathscr{L}_{\mathscr{G}} + \mathscr{D}_{\mathscr{G}})\mathscr{C}\mathscr{B}\|_\infty.\end{aligned} \tag{25}$$

Straightforwardly, mathematical derivations on the supremum lead to

$$\begin{aligned}\|\tilde{u}_{k+1}(t)\|_\lambda \le \|I - (\hat{\tau} - \tau(t))\Gamma(\mathscr{L}_{\mathscr{G}} + \mathscr{D}_{\mathscr{G}})\mathscr{C}\mathscr{B}\|_\infty \|\tilde{u}_k(t)\|_\lambda \\ + 2\delta(\hat{\tau} - \check{\tau})\alpha\|\Gamma(\mathscr{L}_{\mathscr{G}} + \mathscr{D}_{\mathscr{G}})\mathscr{C}\|_\infty \frac{\|\mathscr{B}\|_\infty}{\lambda - \alpha}(1 - e^{(\alpha-\lambda)T}) \\ + 4\delta(\hat{\tau} - \check{\tau})\|\Gamma(\mathscr{L}_{\mathscr{G}} + \mathscr{D}_{\mathscr{G}})\mathscr{C}\mathscr{B}\|_\infty.\end{aligned} \tag{26}$$

Since $\check{\tau} \le \tau(t) \le \hat{\tau} - \delta_\tau$, it has $\|I - (\hat{\tau} - \tau(t))\Gamma(\mathscr{L}_{\mathscr{G}} + \mathscr{D}_{\mathscr{G}})\mathscr{C}\mathscr{B}\|_\infty \le \|I - \delta_\tau\Gamma(\mathscr{L}_{\mathscr{G}} + \mathscr{D}_{\mathscr{G}})\mathscr{C}\mathscr{B}\|_\infty$, which leads to

$$\begin{aligned}\|\tilde{u}_{k+1}(t)\|_\lambda \le \|I - \delta_\tau\Gamma(\mathscr{L}_{\mathscr{G}} + \mathscr{D}_{\mathscr{G}})\mathscr{C}\mathscr{B}\|_\infty \|\tilde{u}_k(t)\|_\lambda \\ + \beta(\hat{\tau} - \check{\tau})\|\Gamma(\mathscr{L}_{\mathscr{G}} + \mathscr{D}_{\mathscr{G}})\mathscr{C}\|_\infty,\end{aligned} \tag{27}$$

where $\beta = 2\delta[(\alpha\|\mathscr{B}\|_\infty/\lambda - \alpha)(1 - e^{(\alpha-\lambda)T}) + 2\|\mathscr{B}\|_\infty]$.

The bound of $\|\Gamma(\mathscr{L}_{\mathscr{G}} + \mathscr{D}_{\mathscr{G}})\mathscr{C}\|_\infty$ is determined by the control gain and the Laplacian matrix of the communication topology. From the above derivations, it is straightforward to conclude that there exists a sufficient large λ to make sure β is bounded. Therefore, if $\|I - \delta_\tau\Gamma(\mathscr{L}_{\mathscr{G}} + \mathscr{D}_{\mathscr{G}})\mathscr{C}\mathscr{B}\|_\infty < 1$, we have

$$\lim_{k\longrightarrow\infty} \|\tilde{u}_k(t)\|_\lambda \le \min\left\{2\delta, \frac{\beta(\hat{\tau} - \check{\tau})\|\Gamma(\mathscr{L}_{\mathscr{G}} + \mathscr{D}_{\mathscr{G}})\mathscr{C}\|_\infty}{1 - \|I - \delta_\tau\Gamma(\mathscr{L}_{\mathscr{G}} + \mathscr{D}_{\mathscr{G}})\mathscr{C}\mathscr{B}\|_\infty}\right\}. \tag{28}$$

Then, the upper bound of the lifting synchronization error is derived as

$$\begin{aligned}\lim_{k\longrightarrow\infty} \|\tilde{y}_k(t)\|_\lambda \le \|\mathscr{C}\|_\infty \frac{\|\mathscr{B}\|_\infty}{\lambda - \alpha}(1 - e^{(\alpha-\lambda)T}) \\ \cdot \min\left\{2\delta, \frac{\beta(\hat{\tau} - \check{\tau})\|\Gamma(\mathscr{L}_{\mathscr{G}} + \mathscr{D}_{\mathscr{G}})\mathscr{C}\|_\infty}{1 - \|I - \delta_\tau\Gamma(\mathscr{L}_{\mathscr{G}} + \mathscr{D}_{\mathscr{G}})\mathscr{C}\mathscr{B}\|_\infty}\right\}.\end{aligned} \tag{29}$$

Obviously, if λ is large enough, the synchronization error converges to zero when $k \longrightarrow \infty$ within the time interval $t \in [0, T]$. This completes the proof. □

5. Numerical Examples

In order to illustrate the performance of the designed iterative learning controller, this section firstly conducts a simulation where the lifting system is controlled by the PID controller $K = B^T P$, which is easy to be designed with LMI tools. Then, we carried out simulation with designed controller (7) and compared the synchronization performance to show the advantage of our proposed advanced distributed controller.

The simulation is carried out in a powerful and reliable hydraulic system simulation tool: AMESim. The hydraulic lifting system constructed in AMESim is composed of 1 leading subsystem and 5 followers. As proposed in the scheme of the intelligent lifting system, independent hydraulic pumps are configured for the lifting subsystems, as shown in Figure 3. From the connection status as depicted in

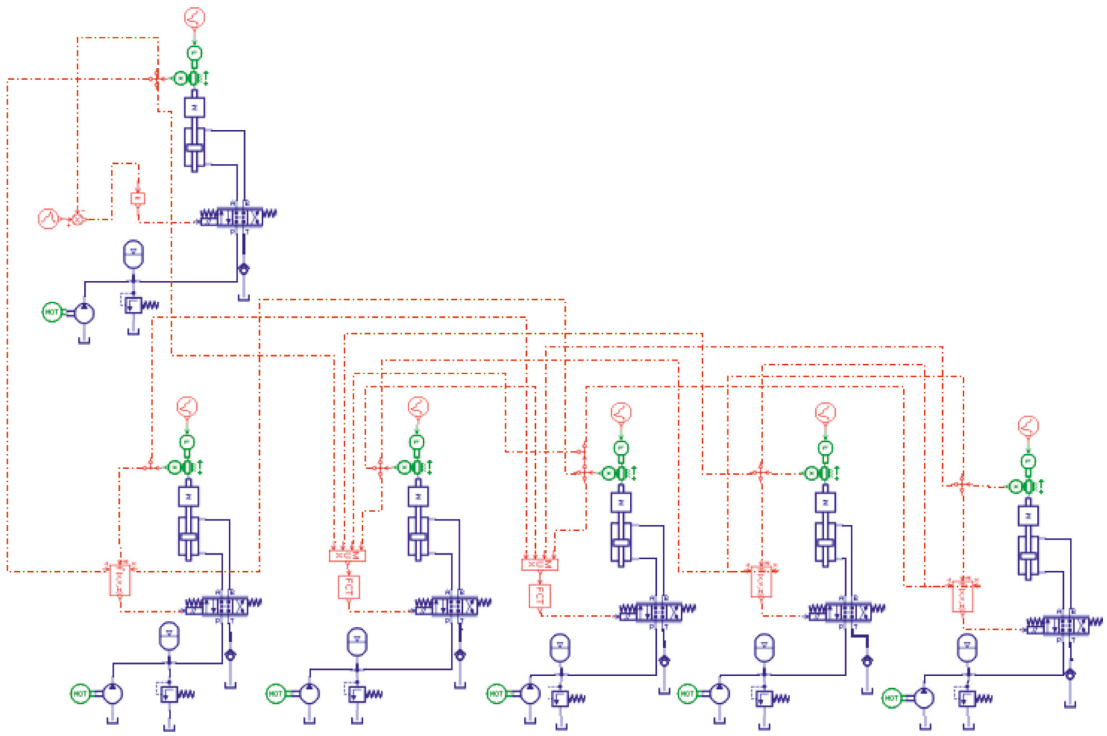

Figure 3: Scheme of the intelligent lifting system constructed in AMESim. The parameters used in AMESim are configured in Table 2.

Figure 3, we can obtain that $d_1 = 1, a_{12} = 1, a_{23} = 1, a_{34} = 1, a_{45} = 1$. Therefore, it is straightforward to obtain the Laplacian matrix of the communication topology of the intelligent lifting system:

$$\mathscr{L}_{\mathscr{G}} + \mathscr{D}_{\mathscr{G}} = \begin{pmatrix} 2 & -1 & 0 & 0 & 0 \\ -1 & 2 & -1 & 0 & 0 \\ 0 & -1 & 2 & -1 & 0 \\ 0 & 0 & -1 & 2 & -1 \\ 0 & 0 & 0 & -1 & 1 \end{pmatrix}. \tag{30}$$

A back pressure valve is added to the oil return circuit to maintain a constant pressure at the pump outlet and to reduce the fluctuation of flow and pressure caused by the siphon. The accumulator in the simulation can improve the stability of the hydraulic cylinder by stabilizing the flow and pressure of the hydraulic pump. In this article, the synchronous hydraulic cylinder is assumed to be fixed. However, the application scenario of the synchronous hydraulic cylinder is quite extensive. This paper mainly discusses the hydraulic cylinder in the vertical direction of the force. When multiple hydraulic cylinders can offset the external influence in the horizontal direction, the same excellent control effect can be obtained. Therefore, for mobile application scenarios, it is necessary to ensure that multiple hydraulic cylinders always have the same motion state, which puts forward higher requirements for automobiles, which is beyond the scope of this article.

The lifting heights of the subsystems are presented in Figure 4. Correspondingly, the lifting synchronization errors are described in Figure 5. From Figures 4 and 5, it is easy to see that the lifting subsystems generally appear to be synchronous under the effect of this distributed controller. However, the synchronization error peaks at the rising stage with maximum value 0.04 m, which could not meet the high requirements. (Table 3).

Table 2: Configuration parameters in AMESim.

Physical meaning	Value	Valve damping ratio	0.7
Piston diameter	35 mm	Valve rated current	180 mA
Rod diameter	12 mm	Flow rate at maximum valve opening	50 L/min
Length of stroke	1 m	Dead volume	200 cm^3
Valve natural frequency	200 HZ	Typical speed of pump	1000 rev/min
Total mass being moved	80 kg	Pump displacement	35 cc/rev

In order to verify the effect of load size on synchronization accuracy errors, we conduct more simulations to get the table above. According to the simulation data shown in the table above, it can be concluded that the load size affects the synchronization accuracy slightly.

Remark 2. It is reasonable to only present the following hydraulic subsystems' lifting heights in the simulation results. This is because the leading hydraulic lifting system is directly controlled by the server station. It is independent from the following subsystems. In practical applications, the leading hydraulic subsystem is recommended to be deployed separately outside the heavy load for the sake of achieving synchronization performance.

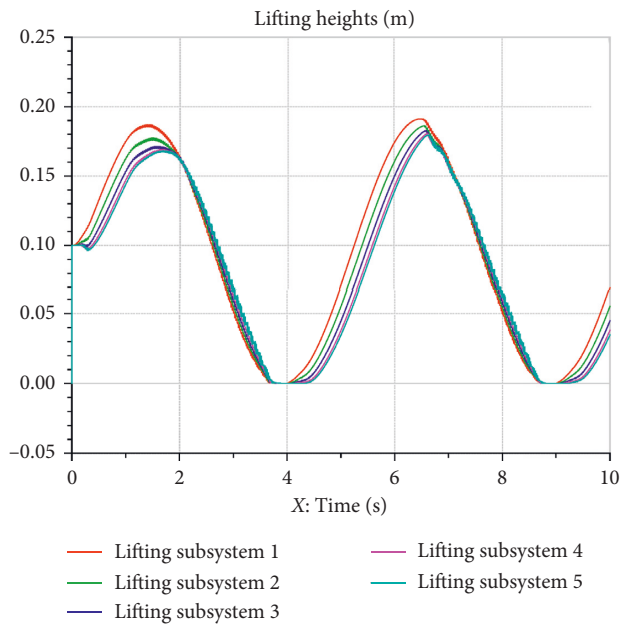

Figure 4: Lifting heights of the system.

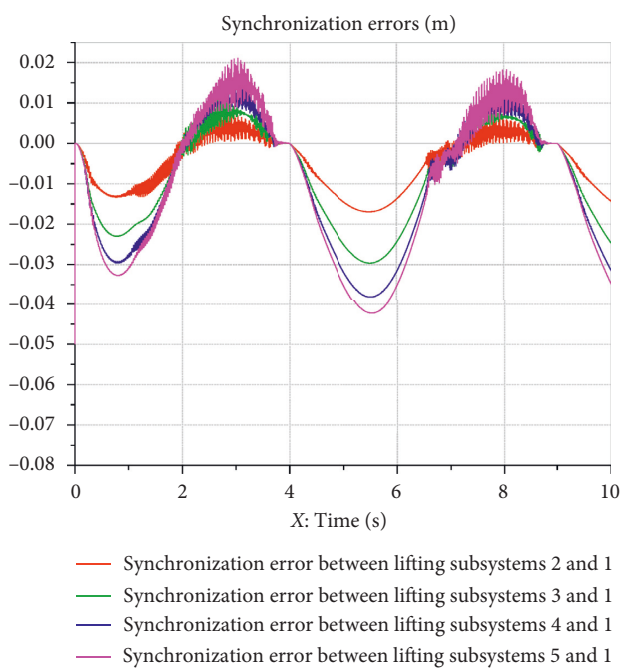

Figure 5: Synchronization errors of the lifting system.

Table 3: Effect of load size on synchronization accuracy errors.

Load (N)	Synchronization accuracy errors
10	0.0040
100	0.0044
1000	0.0045
10000	0.0034

In order to deal with this issue and enhance the synchronization precision in a finite time interval, this paper designs an advanced distributed controller. Next, a

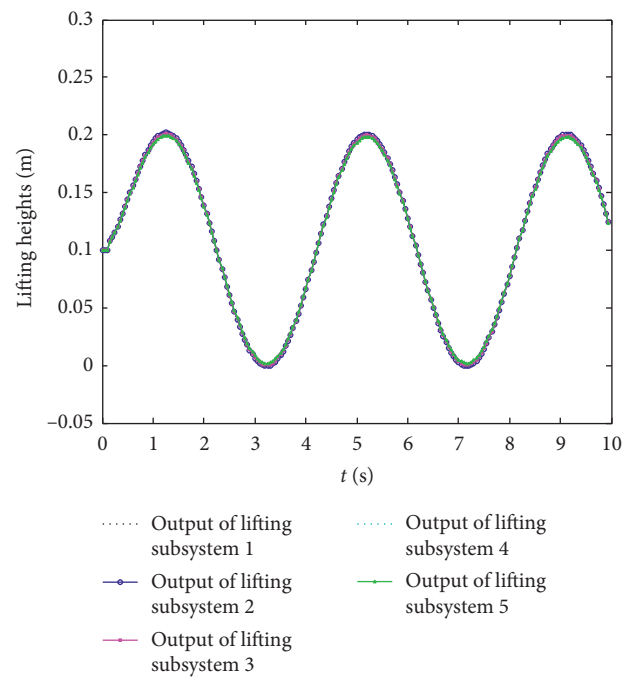

Figure 6: Lifting heights of the system with proposed controller.

simulation is implemented with the iterative controller, which is based on mathematical model (3). Through analysing the AMESim configuration parameters, the state matrix A and control matrix B are specified as

$$A = \begin{bmatrix} 0 & 1 & 0 \\ 0 & 0 & 1 \\ 0 & -5673.1 & -11.5 \end{bmatrix}, \quad B = \begin{bmatrix} 0 \\ 0 \\ 3675.2 \end{bmatrix}. \tag{31}$$

The nonlinear part of the lifting system is specified as

$$f(\cdot) = \begin{bmatrix} 0.1e^{-t}\sin(x(1)) \\ 0.1\sin(x(2)) \\ 0 \end{bmatrix}, \tag{32}$$

thus, $l_f = 0.1$.

The desired trajectory of the lifting system over time interval $t \in [0, 10]$ is configured as a sine curve with mean value 0.1. The communication time delay is $\tau(t) = 1/4(1 + e^{0.2\sin(t)})$. The estimation of communication time delay's lower bound is 0.1, while the estimation of the upper bound is 0.128. The saturation of the control input is designed as $\delta = 10$, and the control parameter is designed as

$$\Gamma = \mathrm{diag}\{0.198, 0.198, 0.198, 0.198, 0.198\}. \tag{33}$$

The lifting heights and the synchronization errors of the lifting system with designed iterative controller at iteration 20 are presented in Figures 6 and 7, respectively. With the proposed advanced control algorithm in this paper, the

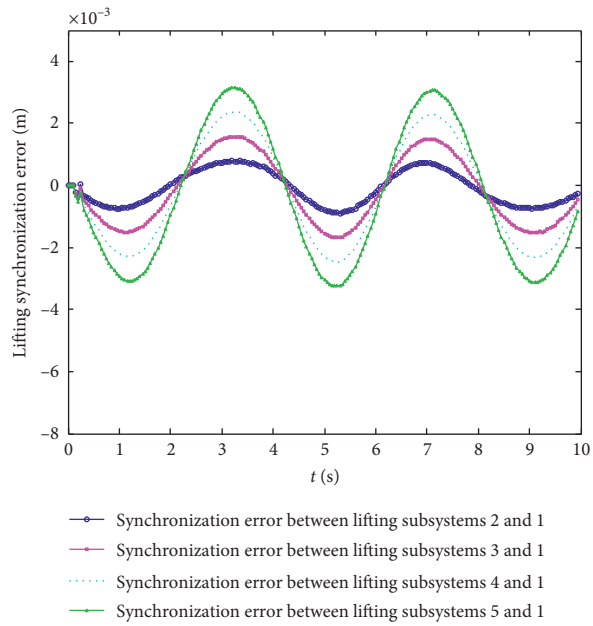

Figure 7: Synchronization errors of the lifting system with proposed controller.

maximum synchronization error reduces to 0.004 m, which clearly proves the effectiveness of the proposed advanced iterative controller.

6. Conclusions and Future Work

This paper presents an intelligent hydraulic synchronization lifting system scheme, in which wireless DTUs and distributed controllers are equipped in each self-contained lifting subsystem. The intelligent hydraulic lifting subsystems interact with subsystems within their communication range through DTUs. Based on the communication interaction and coupling information, the mathematical model of the overall lifting system is established, and the controller is designed. The proposed advanced iterative controller effectively improves the synchronization performance when lifting a heavy load. The results are based on the assumption that all hydraulic subsystems are working in order. However, malfunctioning of hydraulic systems is possible. It is worth to further design the iterative controller under node failures in the future work. In this paper, the effectiveness of the proposed distributed controller is proved by simulations. However, the proposed controller needs further verification in experiments with the test bench.

Data Availability

The data used to support the findings of this study are included within the article.

Conflicts of Interest

The authors declare that they have no conflicts of interest.

Acknowledgments

This work was supported by the Fundamental Research Funds for the Central Universities (Grant No. 2018RC011).

References

[1] ENERPAC, http://enerpac.com.cn/zh-hans/pro_jects/1125.
[2] C. Zhang, J. Xiao, and X. Yan, "Multi-cylinder synchronous system for bridge lifting," *Chinese Hydraulics & Pneumatics*, vol. 6, pp. 39–42, 2007.
[3] X. Liu, *The Research on the Control of Distributed Synchronous Hydraulic System Based on PROFIBUS*, HuaZhong University of Science and Technology, Wuhan, China, 2012.
[4] P. Shu, "The application research on key technology of hydraulic speed servo system of multi-cylinder isothermal forging hydraulic press," Hefei University of Technology, Hefei, China, 2012.
[5] Q. Chao, J. Zhang, B. Xu et al., "A review of high-speed electro-hydrostatic actuator pumps in aerospace applications: challenges and solutions," *Journal of Mechanical Design*, vol. 141, no. 5, pp. 1–13, 2019.
[6] H. Li, G. Guan, H. Guo et al., "Modeling, simulation and experiment on valve controlled asymmetry piston considering valve port error," *Chinese Journal of Mechanical Engineering*, vol. 43, no. 9, pp. 33–39, 2007.
[7] L. Dong, S. Chai, B. Zhang, S. K. Nguang, and X. Li, "Cooperative relay tracking strategy for multi-agent systems with assistance of Voronoi diagrams," *Journal of the Franklin Institute*, vol. 353, no. 17, pp. 4422–4441, 2016.
[8] Q. Fu, P. Gu, X. Li, and J. Wu, "Iterative learning control approach for consensus of multi-agent systems with regular linear dynamics," *Science China Information Sciences*, vol. 60, no. 7, Article ID 079202, 2017.
[9] A. Muhammadhaji, A. Abdurahman, and H. Jiang, "Finite-time synchronization of complex dynamical networks with time-varying delays and nonidentical nodes," *Journal of Control Science and Engineering*, vol. 2017, Article ID 5072308, 13 pages, 2017.
[10] L. Ke and Y. Liu, "Modeling and simulation of variable frequency pump control fatigue test machine," *IJE Transactions A: Basics*, vol. 29, no. 1, pp. 96–102, 2016.
[11] L. Dong and C. Zhu, "Distributed control strategy for large-scale hydraulic synchronous lifting systems," *Proceedings of the Institution of Mechanical Engineers, Part I: Journal of Systems and Control Engineering*, vol. 232, no. 3, pp. 213–222, 2018.
[12] S.-L. Du, S. Wang, R. Wang, and M. Yu, "Observer-based H ∞ stabilisation for linear systems with large delay periods," *IET Control Theory & Applications*, vol. 10, no. 4, pp. 417–423, 2016.
[13] T. H. Lee, J. Xia, and J. H. Park, "Networked control system with asynchronous samplings and quantizations in both transmission and receiving channels," *Neurocomputing*, vol. 237, pp. 25–38, 2017.
[14] L. Dong, S. Chai, B. Zhang, S. K. Nguang, and S. K. Nguang, "Sliding mode control for multi-agent systems under a time-varying topology," *International Journal of Systems Science*, vol. 47, no. 9, pp. 2193–2200, 2016.
[15] Y. Maddahi, S. Liao, W.-K. Fung, and N. Sepehri, "Position referenced force augmentation in teleoperated hydraulic manipulators operating under delayed and lossy networks: a pilot study," *Robotics and Autonomous Systems*, vol. 83, pp. 231–242, 2016.

[16] L. E. Aik, *2-D Analysis Based ILC for Linear Time-Variant Discrete Systems with Multiple Time Delays*, Universiti Malaysia Perlis, Arau, Malaysia, 2009.

[17] D. Meng and Y. Jia, "Formation control for multi-agent systems through an iterative learning design approach," *International Journal of Robust and Nonlinear Control*, vol. 24, no. 2, pp. 340–361, 2012.

[18] D. Ma and H. Lin, "An accelerating iterative learning control based on an adjustable learning interval," *Journal of Control Science and Engineering*, vol. 2017, Article ID 1731676, 6 pages, 2017.

[19] Y. Qian, X. Wu, J. Lü, and J.-A. Lu, "Second-order consensus of multi-agent systems with nonlinear dynamics via impulsive control," *Neurocomputing*, vol. 125, no. 3, pp. 142–147, 2014.

[20] Y. Louartassi, E. E. Mazoudi, and N. Elalami, "A new generalization of lemma Gronwall-Bellman," *Applied Mathematical Sciences*, vol. 13, pp. 621–628, 2012.