Hindawi Publishing Corporation
Journal of Electrical and Computer Engineering
Volume 2013, Article ID 712376, 16 pages
http://dx.doi.org/10.1155/2013/712376

Review Article

Power Line Communications for Smart Grid Applications

Lars Torsten Berger,[1] Andreas Schwager,[2] and J. Joaquín Escudero-Garzás[3]

[1] *Kenus Informática, Paterna, Valencia, Spain*
[2] *European Technology Center (EuTEC), Sony Deutschland GmbH, Stuttgart, Germany*
[3] *Department of Telecommunications and Systems Engineering, Universitat Autónoma of Barcelona (UAB), Barcelona, Spain*

Correspondence should be addressed to Lars Torsten Berger; lars.berger@kenus.es

Received 3 August 2012; Accepted 29 December 2012

Academic Editor: Ahmed Zeddam

Power line communication, that is, using the electricity infrastructure for data transmission, is experiencing a renaissance in the context of *Smart Grid*. Smart Grid objectives include the integration of intermittent renewable energy sources into the electricity supply chain, securing reliable electricity delivery, and using the existing electrical infrastructure more efficiently. This paper surveys *power line communications* (PLCs) in the context of Smart Grid. The specifications *G3-PLC*, *PRIME*, *HomePlug Green PHY*, and *HomePlug AV2*, and the standards *IEEE 1901/1901.2* and *ITU-T G.hn/G.hnem* are discussed.

1. Introduction

Smart Grids, for many, the next big technological revolution since the invention of the Internet, will play an important role in tomorrow's societies. Governments around the world are pumping large sums of money into *Smart Grid* (SG) research, development, and deployments, their aims being manifold. Smart Grids have the potential to reduce carbon dioxide emissions through the integration of distributed renewable energy resources, energy storage, and plug-in hybrid electric vehicles. Moreover, they can increase the reliability of the electricity supply (reduced blackout rate) by real-time measurements, monitoring and control of the generation, and transmission and distribution networks. Further, they can render the utilization of base load power plants and electricity transport infrastructure more efficient, deploying dynamic pricing and demand response strategies [1, 2].

Besides achievements in power electronics, sensing, monitoring, and control technology, key Smart Grid enablers are the advances that in the last decade have been made in the area of telecommunications. There is a long list of complementary and sometimes competing wireless and wireline specifications and standards that can be used in Smart Grid deployments [3]. Industry adoption and large-scale customer roll-outs are still in their infancies, and it is hard to make an accurate prediction of the "winners" and "losers." What seems clear is that *power line communications* (PLCs), that is, communications over the existing electrical infrastructure, will have their part to play since they provide the natural upgrade from simple electricity conductors to hybrid and bidirectional electricity and data communication solutions.

The idea of using power lines also for communication purposes has already been around at the beginning of the last century [4]. The obvious advantage is the wide spread availability of electrical infrastructure, so that theoretically deployment costs are confined to connecting modems to the existing electrical grid.

Power line technologies can be grouped into *narrowband PLC* (NB-PLC), operating usually below 500 kHz, and *broadband PLC* (BB-PLC), operating usually at frequencies above 1.8 MHz [5]. These are discussed in Sections 5 and 6, respectively. Nevertheless, the following starts out with an introduction to PLC scenarios, followed by channel, noise, and *electromagnetic compatibility* (EMC) aspects. Freely available complementary reading on PLC state-of-the-art can also be found in [6]. Another valuable source of the PLC-related

Table 1: Domains and actors in the smart grid conceptual model, based on [13, Table 3-1].

Domain	Actors in the domain
Customers	The end users of electricity. May also generate, store, and manage the use of energy. Traditionally, three customer types are discussed, each with its own domain: residential, commercial, and industrial.
Markets	The operators and participants in electricity markets.
Service providers	The organizations providing services to electrical customers and utilities.
Operations	The managers of the movement of electricity.
Bulk generation	The generators of electricity in bulk quantities. May also store energy for later distribution.
Transmission	The carriers of bulk electricity over long distances. May also store and generate electricity.
Distribution	The distributors of electricity to and from customers. May also store and generate electricity.

literature is the recently established IEEE Communication Society's web portal on *Best Readings in Power Line Communications* [7].

2. Communication Scenarios

Many national and international organizations are currently drawing up roadmaps for SG standards [8–12]. For brevity, the following orients itself on the work by the US *National Institute of Standards and Technology* (NIST). To structure the various areas of the Smart Grid, NIST devised a domain-based conceptual model [13]. Each *domain* contains *actors* that with the help of communications might act over domain borders. The definitions of domains and actors are reproduced in Table 1. The interconnections between domains are displayed in Figure 1. It has been common practice to distinguish power line communication scenarios according to operation voltages of the power lines [14]. Figure 1 links this voltage-based differentiation to the NIST conceptual model.

High-voltage (HV) lines, with voltages in the range from 110 kV to 380 kV, are used for nationwide or even international power transfer and consist of long overhead lines with little or no branches. This makes them acceptable wave guides with less attenuation per line length as for their medium- and low-voltage counterparts. However, their potential for broadband SG communication services has up to the present day been limited. Time-varying high-voltage arcing and corona noise with noise power fluctuations in the order of several tens of dBs and the practicalities and costs of coupling communication signals in and out of theses lines have been an issue. Further, there is a fierce competition of fiber optical links. In some cases, these links might even be spliced together with the ground conductor of the HV system [15, 16]. Nevertheless, several successful trials using HV lines have been reported in [17–20].

Medium-Voltage (MV) lines, with voltages in the range from 10 kV to 30 kV, are connected to the HV lines via primary transformer substations. The MV lines are used for power distribution between cities, towns, and larger industrial customers. They can be realized as overhead or underground lines. Further, they exhibit a low level of branches and directly connect to *intelligent electronic devices* (IEDs) such as reclosers, sectionalizers, capacitor banks, and phasor measurement units. IED monitoring and control requires only relatively low data rates, and NB-PLC can provide economically competitive communication solutions for these tasks. MV-related studies and trials can be found in [21–23].

Low-voltage (LV) lines, with voltages in the range from 110 V to 400 V, are connected to the MV lines via secondary transformer substations. A communication signal on an MV line can pass through the secondary transformer onto the LV line, however, with a heavy attenuation in the order of 55 dB to 75 dB [24]. Hence, a special coupling device (inductive, capacitive) or a PLC repeater is frequently required if one wants to establish a high data rate communications path. As indicated in Figure 1, the LV lines lead directly or over street cabinets to the end customers' premises. Note that a considerable regional topology difference exits. For example in the USA a smaller secondary transformer on a utility pole might service a single house or a small number of houses. In Europe, however, it is more common that up to 100 households get served from a single secondary transformer substation. Further, as pointed out in [25], significant differences exist between building types. They may be categorized as *multiflat buildings with riser*, *multiflat buildings with common meter room*, *single family houses*, and *high-rise buildings*. Their different electrical wiring topologies influence signal attenuation as well as interference between neighboring PLC networks [26].

In most cases the electrical grid enters the customers' premises over a *house access point* (HAP) followed by an *electricity meter* (M) and a distribution board (fuse box). One frequently refers to PLC systems operating up to this point as *Access* systems. Delivering broadband Internet Access over the electrical grid, also known as *broadband over power line* (BPL), amounted at the end of 2008 to less then 1% of the worlds Access customers (65% used DSL, 21% used cable) [27]. BPL is, however, on the rise, especially in rural areas and in developing countries with a poorly developed fixed telephone line and coaxial cable infrastructure [16]. Apart from general Internet Access, *automated meter reading* (AMR) systems frequently used *ultranarrowband power line communication* (UNB-PLC) technologies like Turtle [28] and TWACS [29, 30] to gain access and control over the energy meters within private homes. UNB-PLC systems are usually designed to communicate over long distances with their signals passing through the LV/MV transformers. This helps to keep the amount of required modems and repeaters to a minimum. Drawbacks are low data rates in the order of 0.001 bit/s and 60 bit/s for Turtle and TWACS, respectively, and sometimes limitations to unidirectional communications. These UNB-PLC technologies are mentioned here as they are among the pioneers in the AMR

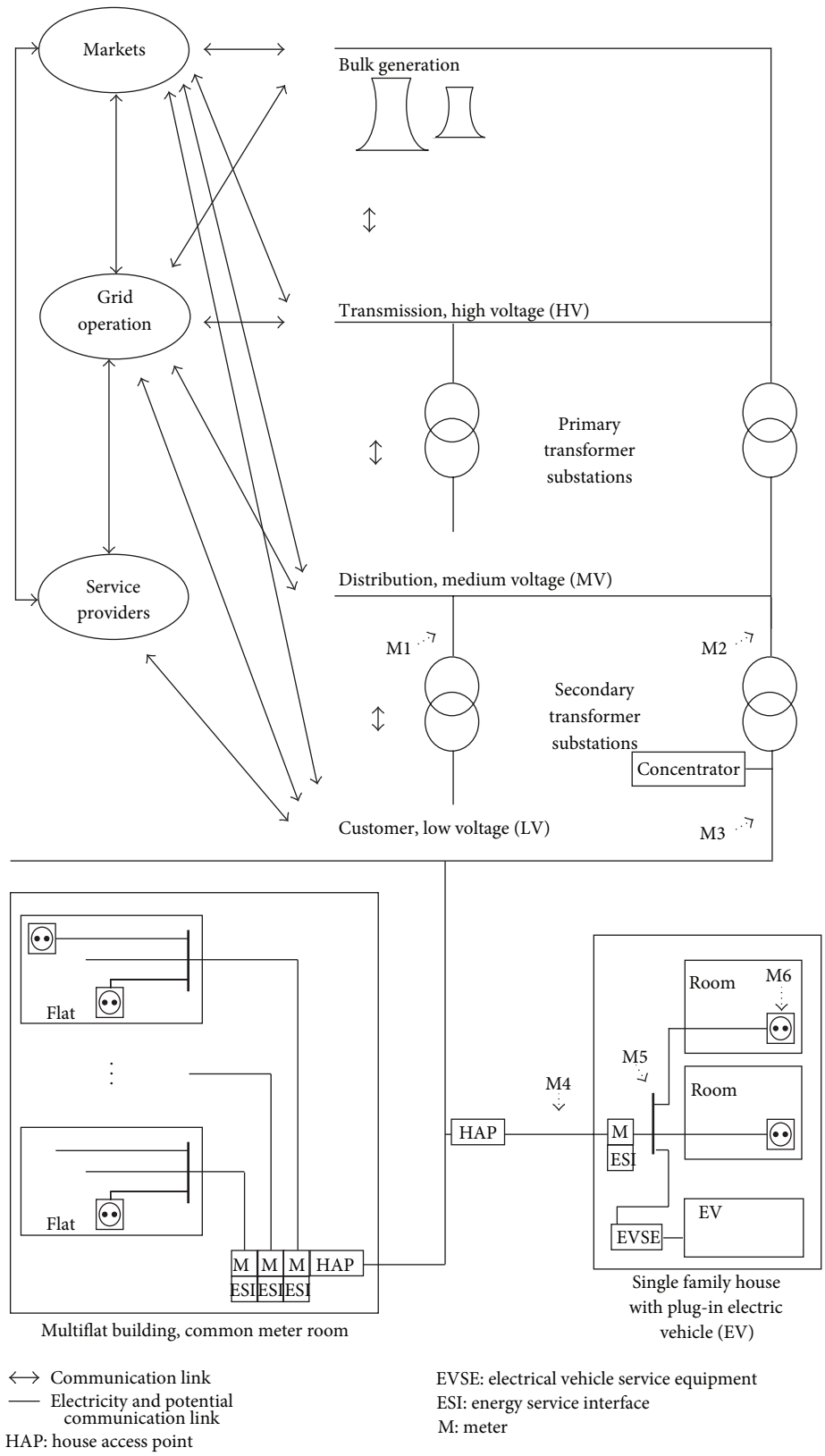

Figure 1: Smart Grid domains and their electrical and communication interconnections, based on Figure 7.1 in [75].

and *distribution automation* field. However, in the light of many upcoming Smart Grid deployments, there are much higher requirements on the communication infrastructure, for example, to support *demand response*, *distributed generation*, and *demand side management* applications. It is believed that these applications can, among others, be supported by PLC-based *Advanced Metering Infrastructure* (AMI). A whole wealth of material on AMI requirements and architectures is available, for example, from the European *OPEN meter* project [31]. To cope with increased AMI requirements, this paper leaves UNB-PLC solutions at a sideline in favour of more recent *narrowband PLC* (NB-PLC) technologies, such as *Power line-Related Intelligent Metering Evolution* (PRIME) [32], and G3-PLC [33, 34]. NB-PLC bidirectional data rates lie in the order of hundred kbit/s, while partly preserving the advantage to communicate over long ranges and through transformers.

From the distribution board the LV lines run up to the different power sockets in every room. Lines may also run to an *electric vehicle service equipment* (EVSE) as indicated in Figure 1. For reliable *home area network* (HAN) high data rate applications, *broadband power line communication* (BB-PLC) technologies are becoming more and more attractive. Field-proven BB-PLC technologies provide data rates of more than 200 Mbit/s [35], making it easy to fulfill the users' home entertainment needs including *high definition television* (HDTV). Upcoming SG services in the home include granular control of smart appliances, the ability to remotely manage electrical devices, and the display of consumption data. Consumer awareness usually leads to a change in consumption habits and in the sequel to energy savings between 10% and 20% [36].

NB-PLC solutions have for a long time been used for home automation applications [14], and it is believed that the well-established automation systems, like BACnet [37], KNX (ISO/IEC 14543-3-5, EN 50090) [38], and LON (ISO/IEC 14908-3, ANSI 709.2) [39, 40], are being integrated into upcoming Smart Home concepts [10]. Nevertheless the following also leaves these technologies at a sideline in favor of more recent standards like IEEE 1901 and ITU-T G.hn for BB-PLC applications and IEEE 1901.2 and ITU-T G.hnem for NB-PLC applications.

3. Channel and Noise Aspects

The power line channel and noise situations heavily depend on the scenario and, hence, span a very large range. Generally, it can be said that the PLC channel exhibits frequency selective multipath fading and a low-pass behaviour. Further, *alternating-current-* (AC) related cyclic short-term variations and abrupt long-term variations can be observed.

3.1. Frequency Selectivity. To understand the effects that lead to frequency selective fading consider, for example, the stub line schematic in Figure 2. An impedance-matched transmitter is placed at A. B marks the point of a branch, also called an electrical T-junction. An impedance-matched receiver is placed at C. A parallel load is connected at D.

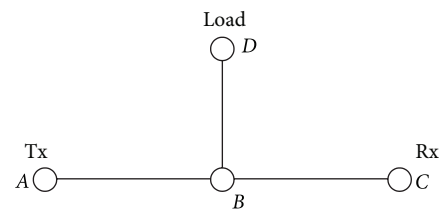

Figure 2: Stub line example.

Transmissions and reflections lead to a situation where a PLC signal travels in form of a direct wave from A over B to C. Another signal travels from A over B to D, bounces back to B, and reaches C. All further signals travel from A to B and undergo multiple bounces between B and D before they finally reach C. The result is a classical multipath situation, where frequency selective fading is caused by in-phase and antiphase combinations of the arriving signal components. The corresponding transfer function can readily be derived in close form as an infinite impulse response filter [41]. One important parameter capturing the frequency selectivity characteristics is the *root mean square* (rms) *delay spread* (DS). For example, designing *orthogonal frequency-division multiplexing* (OFDM) systems, the guard interval might be chosen as 2 to 3 times the rms DS to deliver good system performance [42]. To provide an orientation, the mean of the observed rms DS for a band from 1 MHz up to 30 MHz in the MV, LV-Access and LV-In-Home situations in [24, 42] was reported to be 1.9 μs, 1.2 μs, and 0.73 μs, respectively.

3.2. Time Variation. Besides multipath fading, the PLC channel exhibits time variation due to loads and/or line segments being connected or disconnected [43]. Further, through synchronizing channel measurements with the electrical grid AC mains cycle Cañete et al. were able to show that the In-Home channel changes in a cyclostationary manner [44–46].

3.3. Low-Pass Behavior. Untill now the low-pass behavior of PLC channels has not been considered. It results from dielectric losses in the insulation between the conductors and is more pronounced in long cable segments such as outdoor underground cabling. Transfer function measurements on different cable types and for different lengths can be found in [47, 48]. Using a large set of field trials, low-pass mean gain models are derived in [24]. Over the range from 1 to 30 MHz the mean gain in dB is approximated by linear models. Consider again the PLC scenarios from Figure 1. The mean gain from the secondary transformer to the HAP, labeled M3 and M4, writes [24]

$$\overline{g}_{\text{LV-Access}} = -\left(a_1 \cdot f \cdot d + a_2 \cdot f + a_3 \cdot d + a_4\right), \quad (1)$$

where f is frequency in MHz, d is distance in meters, and the coefficients a_1 to a_4 are 0.0034 dB/(MHz m), 1.0893 dB/MHz, 0.1295 dB/m, and 17.3481 dB, respectively.

The mean gain model in dB for MV lines, as well as for LV-In-Home situations is given by [24]

$$\overline{g}_{\text{MV or LV-In-Home}} = -\left(b_1 \cdot f + b_2\right). \quad (2)$$

For the LV-In-Home situation the mean gain is given from the mains distribution board to a socket in a room, labelled M5 and M6 in Figure 1. The coefficients are $b_1 = 0.596$ dB/MHz and $b_2 = 45.325$ dB. The MV gain describes the channel between two primary transformers on the MV side, indicated by M1 and M2 in Figure 1. Its coefficients are $b_1 = 1.77$ dB/MHz and $b_2 = 37.9$ dB. In both situations the model is not distant dependent. For the MV situation this is due to the fact that not enough measurement results were available to construct a distant-dependent model. Hence, in this case the model is limited to situations where the distance between M1 and M2 is around 510 m. Nevertheless, correction factors are proposed in [24] to determine the mean gain at other distances. For the LV-In-Home situation the model is not distance dependent either as "distance" in an In-Home situation is a hard-to-define term. Power line networks in such situation exhibit usually a large amount of branches, and a detailed floor plan to determine cable length cannot always be obtained. This leads to a situation where the low-pass behavior is less pronounced in the In-Home case. Further, in the MV- and the LV-Access situation the attenuation drastically increases with frequency. This goes well in line with the findings in [49] and is one of the reasons why BB-PLC Access networks are frequently operated in the lower frequency range, for example, between 1 and 10 MHz, while BB-PLC In-Home networks might operate at frequencies above 10 MHz.

3.4. MIMO Channel. For a long time, the power line channel has been regarded as *single-input single-output* (SISO) channel, based on two conductors. Nevertheless, in many In-Home installations three wires, namely, *live* (L) (also called *phase* (P)), *neutral* (N), and *protective earth* (PE), are common [50]. Further, medium- and high-voltage installations often make use of four or more conductors. In this respect, a theoretical framework of multiconductor transmission line theory is extensively treated in [51]. Further, channel characterization and modeling work directly related to multiconductor PLC are available in [52–63].

3.5. MIMO Couplers. In general, the observed channel characteristics are not independent from the coupling devices used to inject and receive the power line signal. Figure 3 presents feeding and receiving possibilities for MIMO power line communication, that is, (a) a *Delta-style* coupler, (b) a *T-style* coupler [55], and (c) a *Star-style* coupler [64]. Coupler designs are tightly related to radiated emission treated in more detail in Section 4 [62]. According to the *Biot-Savart law* the main source of radiated emission is the *common mode* (CM) current [65]. To avoid radiated emission, traditionally PLC modem manufacturers aim at injecting the signal as symmetrically as possible. In this way, two 180° out of phase electric fields are generated that neutralize each other resulting in little radiated emission. This desired symmetrical way of propagation is also known as *differential mode* (DM). Specifically, to avoid the injection of CM, feeding MIMO PLC signals can be done using the delta or T-style couplers from Figures 3(a) or 3(b). The delta, also called transversal probe,

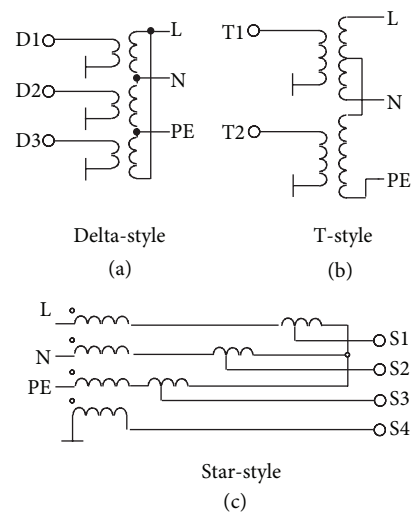

Figure 3: MIMO PLC couplers.

consists of three baluns arranged in a triangle between L, N, and PE. The T-style coupler feeds a differential mode signal between L and N plus a second signal between the middle point of L-N to PE. Receiving the PLC signals is also possible using the star-style or longitudinal coupler. There three wires are connected in a star topology to the center point. The benefit of this coupler is the possibility to receive CM signals which enables a forth reception path. On average CM signals are less attenuated than DM signals [64]. This is why it may be interesting to receive them, especially for highly attenuated channels.

3.6. Noise Characterization and Modeling. Turning from the channel to the noise situation, power line noises can be grouped based on temporal and spectral characteristics. Following, for example, [48, 66] one can distinguish *colored background noise*, *narrowband noise*, *periodic impulsive noise asynchronous to the AC frequency*, *periodic impulsive noise synchronous to the AC frequency*, and *aperiodic impulsive noise*. In [48] all these noises are modeled directly at the receiver using a superposition of spectrally filtered *additive white Gaussian noise* (AWGN), modulated sinusoidal signals, and Markov processes. Instead of modeling the noise directly at the receiver, Cañete et al. proposed to model the noise at its origin and to filter it by the channel transfer function [44, 67]. Besides, specific results on MIMO system noise are presented in [68, 69].

A statistical approach to average colored background noise modeling is presented in [24] based on a large amount of noise measurements in MV, LV-Access and LV-In-Home situations. Although a lot of the details get lost by averaging, the results can still deliver some interesting rule of thumb when one wants to determine a likely average noise level. One general finding is that the mean noise power falls off exponentially with frequency. Derived from [24] the mean noise *power spectral density* (PSD) in dBm/Hz is given by

$$\overline{P}_N = c_1 \cdot e^{(-c_2 \cdot f)} + c_3 - 10 \cdot \log_{10}(30000), \quad (3)$$

Table 2: Mean noise model coefficients [70] © 2010 John Wiley & Sons.

Location	c_1, [dB]	c_2, [1/MHz]	c_3, [dBm/Hz]
M1 and 2, Secondary Transformer, MV	37	0,17	−105
M3, Secondary Transformer, LV	24,613	0,105	−116,72
M4, House access point, LV	29,282	0,12	−114,94
M5, Main distribution board, LV	39,794	0,07	−118,08
M6, Socket in private home, LV	17,327	0,074	−115,172

where the last term normalizes out the 30 kHz bandwidth used in the noise measurement process. The coefficients c_1 to c_3 are given in Table 2. The resulting noise models correspond to the measurement points M1 to M6 in Figure 1.

3.7. Mean SNR Considerations. Details on Tx limits will be discussed in Section 4. For simplicity, assume for now that a power line signal with $\overline{P}_S = -50$ dBm/Hz may be injected. Using the gain and noise models from (1) to (3) the mean *signal-to-noise ratio* (SNR) can then be calculated as

$$\overline{\mathrm{SNR}} = \overline{g} + \overline{P}_S - \overline{P}_N. \tag{4}$$

The mean SNRs for the various connections between the measurement points M1 to M6 in Figure 1 are plotted in Figure 4. One should note that, although the channel gain between two measurement points is symmetric, the noise at the measurement points differs. Hence, five different curves are produced.

It can be seen that especially the lower part of the spectrum, up to 10 MHz, is very well suited for Access and Backhaul applications. Further, for In-Home applications the entire spectrum from 1 to 30 MHz promises high mean SNRs in the order of 40 dB, which goes also well in line with the findings in [71]. Further interesting results for the frequency range up to 100 MHz are available in [61–63, 69, 72].

In general, the results show that there is a high potential for PLC if the estimated mean SNRs can be exploited in PLC modems. However, the presented mean results have to be handled with care. One should bear in mind that the mean SNR models from [24] exhibit a significant standard deviation. Further, effects due to frequency selectivity, narrowband interference, impulsive noise, and time variation are not reflected in Figure 4. Whether the estimated mean SNRs translate into high PLC data rates depends not at last on the PLC modem's signal processing algorithms, its component quality, and permissible implementation complexity.

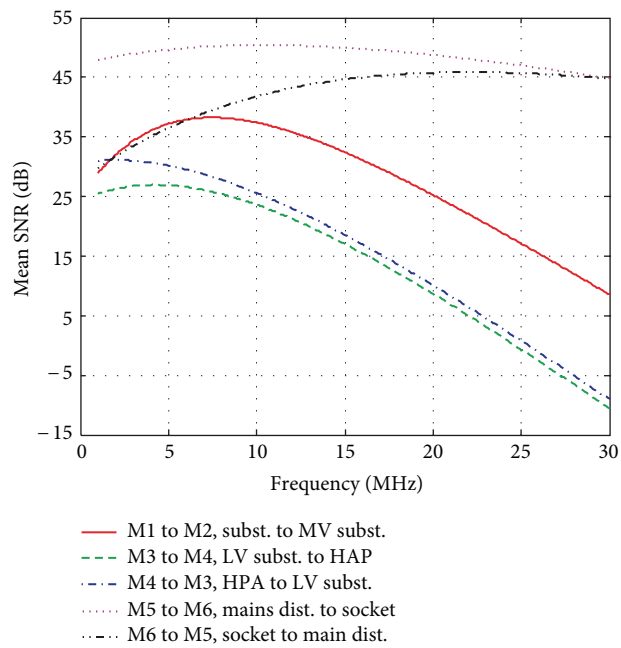

Figure 4: Mean SNR based on −50 dBm/Hz injected PSD, as well as mean channel gain and mean noise power spectral density models.

4. Electromagnetic Compatibility Regulations

Power line cables were not designed to carry communication signals and, hence, give rise to conducted emission, as well as radiated emission that may interfere, for example, with Amateur Radio or radio broadcast receivers. When looking at power line *electromagnetic compatibility* (EMC) regulations, one may distinguish between regulations for NB-PLC and BB-PLC.

The NB-PLC regulations deal with the spectrum from 3 kHz up to around 500 kHz. Important NB-PLC regulations are listed in Table 3. Being a subset of all other bands, the *European Committee for Electrotechnical Standardization* (CENELEC) bands are the only ones available on a global basis. Four CENELEC bands are defined as *A* (3–95 kHz), *B* (95–125 kHz), *C* (125–140 kHz), and *D* (140–148.5 kHz) [73]. Besides specifying transmission limits and their measurement procedures, the CENELEC standard also mandates that the A band may only be used by Energy Suppliers and their licensees, while the other bands may be used by consumers. Further, devices operating in C band have to comply with a *carrier sense medium access/collision avoidance* (CSMA/CA) protocol that allows a maximum channel holding period of 1 s, a minimum durations between channel uses by the same device of 125 ms, and a minimum time of 85 ms before declaring the channel idle. For the USA, there are currently ongoing efforts [74] to specify the band from 9 kHz to 534 kHz for NB-PLC operations with a mandatory CSMA/CA protocol compliant with CENELEC EN 50065-1 [73]. The advantages are that equipment manufacturers would be easily able to adapt their NB-PLC products to the EU and USA market and to many other markets that follow these standards.

Turning the view to BB-PLC one may again distinguish two frequency ranges, that is, 1 MHz to 30 MHz, where conducted emission is at the focus of regulation, and 30 MHz to 100 MHz, where the focus shifts to radiated emission.

The *Comité International Spécial des Perturbations Radioélectriques* (CISPR), founded in 1934 and now part of the *International Electrotechnical Commission* (IEC), was

Table 3: Important regulations related to NB-PLC [75] © 2012 John Wiley & Sons.

States	Frequ. [kHz]	Institution	References
EU	3–148.5	*Comité Européen de Normalisation Électrotechnique (CENELEC)*	[73]
US	10–490	*Federal Communications Commission (FCC)*	[76]
Japan	10–450	*Association of Radio Industries and Businesses (ARIB)*	[77]

making efforts to regulate BB-PLC generated interference. At the beginning CISPR 22 [78] defined two sets of limits and measurement methods for conducted emissions of telecommunication equipment. One set was defined for the telecommunication port, and the other was defined for the mains port. For PLC modems, it is not defined whether the PLC signal port, which at the same time is used for power supply, is considered as a mains or as telecommunication port. The method for telecommunication ports respects the symmetry properties of the attached cable. Asymmetries like an open light switch or asymmetrical parasitic capacitances convert the symmetrically fed signals into common mode signals [65]. However, the method used for devices connected to the mains, specified in CISPR 16 [79], is based on measuring the asymmetric voltage level of either the phase or neutral wire to the ground. From the perspective of a PLC modem, this is the worst case, because this voltage consists of asymmetric and symmetric voltage; that is, not only the emission, and therewith the interference relevant part, but also the desired signal is measured and compared against emission limits. IEC CISPR/I/89/CD [80] tried to clarify the situation by interpreting PLC as an application following the telecommunication limits of CIPSR 22. Therefore, the *longitudinal conversion loss* (LCL) parameter was used in an identical way as, for example, in the testing of *digital subscriber line* (DSL) equipment. The benefit of using the LCL parameter is the simplicity of measuring it. It is a reflection parameter whose measurement requires an equipment to be connected to only one location of the grid. Other possibilities to verify the potential of interference would have been to place antennas and measure the field generated by the fed PLC signal. However, this would make a measurement setup significantly more cumbersome and error prone. Nevertheless, with respect to highly attenuated wires like the power lines the much simpler measurement of a reflection parameter as in [80] only describes the local situation instead of giving detailed insight of what is happening if a PLC signal travels deeply into the electrical network. In 2008, CISPR/I/257/CD [81] was published with an LCL parameter reduced by 6 dB. Simultaneously, CISPR/I/258/CD [82] indicated that mitigation techniques like cognitive notching for PLC modems [64, 83] and dynamic transmit power management are the compromise to solve the never-ending EMC discussions. CIS/I/301/CD [84] answered the question of whether PLC is connected to the telecommunication port or to the mains port by introducing a Power Line Telecommunication (PLT) port. In this document the *electro magnetic interference* (EMI) mitigation techniques are specified as normative. However, CISPR never proposed a *committee draft for voting* (CDV). This is why CENELEC became active after the lifetime of the CISPR committee to find at least in Europe an acceptable solution. The result, prEN 50561-1:2012 [85] additionally excludes the aeronautical frequencies from power line communication and specifies the following.

(i) An emission measurement procedure at the PLT port while no communication takes place.

(ii) A second emission measurement procedure at the PLT port when normal PLC takes place.

(iii) A general cap on the injected PSD of −55 dBm/Hz.

(iv) Permanent notching of certain parts of the radio spectrum, that is related to amateur radio and aeronautical bands.

(v) A procedure for adaptive notching, meaning that the PLC equipment senses the presence of radio services and notches the affected frequencies for its own operation.

(vi) A procedure of adaptive transmit power management, meaning that the transmitting equipment limits its transmit power as a function of channel attenuation and noise to a level below the allowed maximum, that is just sufficient to achieve the required data rate.

EN50561-1:2012 was approved in November 2012, which finally gives certainty to PLC stakeholders on interference limits.

In the USA the *Federal Communications Commission* (FCC) is in charge of regulating electromagnetic emissions. In general, all digital equipments have to comply with the FCC part 15 standard (47 CFR §15) [76]. Specifically, Access PLC systems over medium- and low-voltage power lines and for a frequency range from 1.705 to 80 MHz are treated in the standard's Section G. Conducted emission limits are explicitly not applicable, but radiated emission limits are imposed through a transmit power spectral density mask. Additionally, PLC systems have to be able to notch certain frequencies that might be used by other services. Further, the FCC defines excluded bands where no PLC signal shall be injected, as well as geographical exclusion zones close to which no Access PLC systems may be deployed. Further, procedures in which service providers inform about prospective PLC Access deployments and complaint handling procedures are a requirement.

More details on PLC EMC regulations as well as conducted and radiated interference measurement results can be found in [6, 61, 86]. Besides, the "*IEEE Standard for Power Line Communication Equipment—Electromagnetic Compatibility (EMC) Requirements—Testing and Measurement Methods*" [87] was recently released, intending to provide an internationally recognized EMC measurement and testing methodology. It endorses among others CISPER22 and FCC part 15 as normative references, but does not establish

any emission limits itself. Looking at the developments in CISPR/CENELEC and at FCC part 15, it becomes clear that next generation PLC equipment has to be highly configurable to apply power spectral density-shaping masks, as well as adaptive notching.

5. Narrowband PLC

Narrowband power line communication systems usually operate in the frequency range from 3 kHz to 500 kHz, that is, the CENELEC/ARIB/FCC bands. Following, for example, the nomenclature in [5], they can be subdivided into *low data rate* (LDR) and *high data rate* (HDR) systems. LDR systems have throughputs of a few kbit/s and usually are based on single carrier technology. Example standards, listed in the NIST *Smart Grid Interoperability Panel* (SGIP) *Catalog of Standards* [3, 13], are ISO/IEC 14908-3 (LON, ANSI/EIA 709.2) [39, 40] and ISO/IEC 14543-3-5 (KNX, EN 50090) [38]. These standards span all layers of the *open systems interconnection* (OSI) model and can, besides over power line, also be used over other media such as twisted pair and in some cases even wirelessly. Their main area of application has been industrial and building automation. In this respect a further popular protocol is BACnet (ISO 16484-5 [37]). The following, however, will focus on the *physical layer* (PHY) of high data rate (up to 1 Mbit/s) NB-PLC. As in many other communication systems OFDM has emerged as the modulation scheme of choice for HDR NB-PLC. Example HDR NB-PLC systems are G3-PLC [33] and PRIME [88] that have made it into ITU G.hnem standardization as ITU G.9903 [89] and ITU G.9904 [90], respectively. Both are also supported via interoperability modes in IEEE 1901.2. With respect to coexistence, the NIST *priority action plan 15* (PAP15) working group recently approved that newly developed NB-PLC standards shall all implement a single coexistence protocol as to "have minimal performance impact on the existing deployed devices," that is, devices using ISO/IEC 14543-3-5, IEC 61334-3-1, IEC 61334-5-1, IEC 61334-5-2, and IEC 61334-4-32 [91].

5.1. PRIME. PRIME, for *Power line-Related Intelligent-Metering Evolution*, was developed within the PRIME Alliance, with its steering committee chaired by the Spanish utility heavyweight Iberdrola [32]. The PRIME system uses a total of 96 ODFM subcarriers over the frequencies from 42 kHz to 89 kHz, that is, within the CENELEC A-band. Further, it deploys differential *binary*, *quaternary*, and *eight-phase shift keying* (BPSK, QPSK, and 8PSK) and an optional 1/2-rate convolutional code. Therewith it is able to achieve a PHY peak data rate of 128.6 kbit/s [92]. The OFDM symbol interval is of 2240 μs including a 192 μs cyclic prefix which suffices to deal with most common power line delay spreads. Further, to deal with unpredictable impulsive noise PRIME offers the option to implement *automatic retransmission request* (ARQ), based on the *selective repeat* mechanism. Turning to the system architecture, PRIME is forming subnetworks, where each subnetwork has one *Base Node* and several *Service Nodes*. The base node is the "master" that manages the subnetwork's resources and connections using a periodically sent *beacon* signal. The base node is further responsible for PLC channel access arbitration. A contention free and a contention-based access mechanism exists, whose usage time and duration are decided by the base node. Within the contention-free *time division multiplex* (TDM) channel access period, the base node assigns the channel to only one node at a time. The contention-based access uses CSMA/CA [88, 92]. To assure *privacy*, *authentication*, and *data integrity* a *Security Profile 1* is defined, that uses 128-bit AES encryption [93]. The specification also defines a *Security Profile 0* equivalent to no encryption and leaves room for the definition of two further security profiles in future releases. To interface MAC and *application layer*, PRIME defines a *convergence layer* (CL) between the two. The CL can be split into a *Common Part Convergence Sublayer* (CPCS) and a *Service Specific Convergence Sublayer* (SSCS). The CPCS performs tasks of data segmentation and reassembling and is adjusted to the specific application. Three SSCSs are currently defined: the "*NULL Convergence Sublayer* provides the MAC layer with a transparent way to the application, being as simple as possible and minimizing the overhead. It is intended for applications that do not need any special convergence capability." "The *IPv4 Convergence Layer* provides an efficient method for transferring IPv4 packets over the PRIME network." Finally, the *IEC 61334-4-32 Convergence Layer* "supports the same primitives as the IEC 61334-4-32 standard" [94], making it easy, for example, to support advanced metering applications that make use of the standardised data models of IEC 62056-62 [95]. PRIME could therefore also be used to replace the aging PHY and MAC layer of the single carrier power line standard IEC 61334-5-1 [96], also known as S-FSK, for *spread frequency shift keying*.

5.2. G3-PLC. The other OFDM-based HDR NB-PLC specification, G3-PLC [97–99] was published in August 2009. It can be configured to operate in the internationally accepted bands from 10 kHz to 490 kHz (FCC, CENELEC, and ARIB). Using differential BPSK, QPSK, and 8PSK for constellation mapping and concatenated convolutional Reed-Solomon forward error correction coding, it reaches PHY peak data rates close to 300 kbit/s. Peak and typical data rates for various frequency bands have been reported in [100] and are, for convenience, also listed in Table 4. The MAC layer is based on IEEE 802.15.4-2006 [101]. 6LoWPAN [102] is used to adapt the IEEE 802.15.4-2006 MAC to IPv6 [103]. This allows the application layer to comply with ANSI C12.19/C12.22 [104] or IEC 62056-61/62 (DLMS/COSEM) [105, 106] to run standard Internet services.

A comparison between PRIME and G3-PLC, mainly focusing on physical layer aspects is presented in [107]. There it is found that G3-PLC is slightly more robust when disturbed by AWGN and narrowband interference, while PRIME is the less complex system, which could allow cheaper implementations.

5.3. IEEE 1901.2 and ITU-T G.hnem. The specifications PRIME and G3-PLC form the baseline in the ongoing NB-PLC standardization processes within IEEE 1901.2 [108]. Compliant devices are supposed to support interoperability modes with PRIME and G3-PLC in the CENELEC A band

Table 4: G3-PLC data rates, based on [100].

Frequency band	Peak rate, [kbit/s]	Typical rate, [kbit/s]
CENELEC (36 kHz to 91 kHz)	46	44
FCC (150 kHz to 487.5 kHz)	234	187
FCC (10 kHz to 487.5 kHz)	298	225

and have as minimum a requirement to implement one of the PHY/MACs referred to as *Main 1901.2*, *G3 CENELEC A*, and *PRIME CENELEC A* [109]. G3-PLC and PRIME have also been approved as ITU recommendations G.9903 [89] and G.9904 [90], respectively in October 2012. Together with ITU G.9901 [110] and ITU G.9902 [111] they now supersede what was formally ITU G.9955/G9956. ITU G.hnem development is oriented on Smart Grid use cases, like support of *pricing awareness*, *load control*, and *demand response*, and it has been agreed to meet the requirements set forth by NIST PAP15.

There are still some open issues, for example, with respect to ITU G.hnem IEEE 1901.2 coexistence. Implementers that cannot wait might consider that due to relatively low signal processing complexity, NB-PLC modems can be implemented on a *digital signal processor* (DSP). This allows for upgradeability via software updates and can especially be an advantage for early stage customer premises deployments where a hardware update would be prohibitively expensive. An upgradeable DSP solution that supports PRIME as well as G3-PLC is, for example, offered by Texas Instruments [112].

6. Broadband PLC

In the last decade, BB-PLC chips by semiconductor vendors, such as Intellon (in 2009 acquired by Atheros, Atheros in 2011 acquired by Qualcomm) [113], DS2 (in 2010 acquired by Marvell) [114], Gigle (in 2010 acquired by Broadcom) [115], and Panasonic [116], came to market that operate in the band from around 1 MHz to 300 MHz. The chips are mainly based on three consortia backed specifications developed within the frameworks of the *HomePlug Powerline Alliance* (HomePlug) [117], the *Universal Powerline Association* (UPA) [118], and the *High Definition Power Line Communication* (HD-PLC) Alliance [119]. Related products allow data rates around 200 Mbit/s and are not interoperable. However, to make PLC systems a broad success, an internationally adopted BP-PLC standard became essential. The *International Telecommunications Union* (ITU) as well as the *Institute of Electrical and Electronics Engineers* (IEEE) commenced work on such next generation standards, namely, *ITU-T G.hn* and *IEEE 1901*. ITU-T G.hn is not only applicable to power lines, but also to phone lines and coaxial cables, therewith for the first time defining a single standard for all major wireline communications media. At the end of 2008, the PHY layer and the overall architecture were consented in ITU-T Recommendation G.9960 [120]. The *Data Link Layer* (DLL) Recommendation G.9961 [121] was approved in June 2010, and a MIMO transceiver extension G.9963 was consented in September 2011 [122]. Alongside, the *HomeGrid Forum* was founded to promote the ITU-T G.hn standard and to address certification and interoperability issues [123]. Simultaneously, IEEE P1901 [124] was working on the "*Draft Standard for Broadband over Power Line Networks: Medium Access Control and Physical Layer Specifications*" [125]. It covers the aspects Access, In-Home, and coexistence of Access-In-Home and In-Home-In-Home networks, and the official IEEE Std 1901–2010 was published on December, 30, 2010, with the HomePlug Powerline Alliance [117] being a certifying body for IEEE 1901 compliant products. In analogy to the introduction of MIMO to ITU G.hn, the HomePlug Alliance introduced the HomePlug AV2 specification in January 2012. The HomePlug AV2 specification includes features like MIMO with beamforming, an extended frequency range of up to 86 MHz, efficient notching, several transmit power optimization techniques, 4096-QAM, power save modes, short delimiter, and delayed acknowledgement, boosting the maximum PHY rate to around 2 Gbit/s. Further, to cover multiple home networking media under one umbrella, IEEE P1905.1 is working on a standard for a convergent digital home network for heterogeneous technologies [126]. It defines an abstraction layer for multiple home networking technologies like IEEE 1901, IEEE 802.11 (Wi-Fi), IEEE 802.3 (Ethernet), and MoCA 1.1 and is extendable to work with other home networking technologies.

6.1. IEEE 1901 and ITU-T G.hn. IEEE 1901 uses the band from 2 MHz up to 50 MHz with services above 30 MHz being optional. ITU-T G.hn (G.9960/G.9961) operates from 2 MHz up to 100 MHz using bandwidth scalability, with three distinct and interoperable bands defined as 2–25, 2–50, and 2–100 MHz. The architectures defined by IEEE 1901 and ITU-T G.hn (G.9960/G.9961) are similar in several aspects. In G.hn one refers to a subnetwork as *Domain*. Operation, as well as communication is organized by the *Domain Master* who communicates with various *Nodes*. Similarly, the subnetwork in 1901 is referred to as *Basic Service Set* (BSS). The equivalent to the domain master is the *BSS Manager*, which connects to so-called *Stations*. These basic network components with their system specific terminology are summarized in Table 5.

While the general concepts are similar, one should note that G.hn defines a PHY/DLL used for operation over any wireline medium. Primarily, the OFDM parameters are adjusted to account for different medium-dependent channel and noise characteristics. On the contrary, IEEE 1901 defines two disparate PHY/MAC technologies based on HomePlug AV and HD-PLC. One of the key differences is their frequency division-multiplexing scheme. The HomePlug AV-based version uses the *Fast Fourier Transform* (FFT), while the HD-PLC based version uses Wavelets. Hence, they are sometimes also referred to as FFT-PHY and Wavelet-PHY, respectively. A special coexistence mechanism has to be used when operating IEEE 1901 devices from both PHYs on the same power line which is standardized within IEEE 1901 as *Inter-System Protocol* (ISP) (see also [127] or [128]). A nearly identical mechanism was standardized by ITU-T in G.9972 [129], also known as G.cx. Technical contributions to ITU, and IEEE from members of the NIST PAP15 assured the alignment of both standards. As a result, it is likely that the

Table 5: Synopsis of terms used in the BB-PLC standards ITU-T G.hn and IEEE 1901 [75] © 2012 John Wiley & Sons.

Network item	ITU-T G.hn	IEEE P1901
Sub-network	Domain	*Basic Service Set (BSS)*
Transceiver	Node	*Station (STA)*
Sub-network controller	Domain Master	BSS Manager
Access control schedule	*Media Access Plan (MAP)*	Beacon
Timeframe	MAC cycle	Beacon Interval
Access methods	CSMA/CA, TDMA, STXOP (*shared transmission opportunities*)	CSMA/CA, TDMA
Relaying	Relay (L2)	Repeater (L2)
Network controller	Relay (assigned	Proxy BSS
proxy	as a proxy)	Manager
Transceiver	Hidden	Hidden
(not directly reached)	Node	Station

NIST SGIP will mandate that all BB-PLC technologies implement Recommendation ITU-T G.9972 or ISP [130]. ISP/G.cx provides coexistence by splitting time equally among systems present on the line. IEEE 1901 additionally specifies the optional *Coexistence Protocol* (CXP), that provides coexistence among multiple technologies based on a first-come-first-serve basis.

The coexistence mechanism is thought for the case where disparate networks would otherwise be interfering with each other. Another likely scenario is that same technology networks exist in close proximity, with the risk of so-called *neighboring network* interference. To deal with neighboring network interference G.hn uses different preamble-symbol seeds in each network. Therewith, G.hn networks are able to coexist and communicate simultaneously, that is, not using time division. Instead, link adaptation procedures adjust the throughput to cope with degraded *signal to interference plus noise ratios* (SINR). In many cases the throughput will be throttled only slightly allowing G.hn networks to coexist nearly unimpeded. On the other hand, IEEE 1901 relies on a CSMA/CA medium access strategy, which may lead to an increased number of collisions. As countermeasure, IEEE 1901 introduces a *coordinated mode* that allows neighboring networks to allocate times over the shared medium for specific communications. This coordinated *time division multiple access* (TDMA) mode enables traffic to get through unimpeded albeit at the price of time division (orthogonal throughput sharing).

6.2. ITU-T G.hn Low Complexity Profile. It is envisioned that G.hn nodes are in the future embedded into *Smart Grid home* (SGH) *area network* devices. SGH nodes will typically make use of the G.hn *low complexity profile* (LCP), operating in the frequency range 2–25 MHz. This allows for reduced component cost and power consumption. Example SGH nodes could be heating and air conditioning appliances, Plug-in Electric Vehicles (PEV), and Electric Vehicle Service Equipments (EVSEs) as indicated in Figures 1 and 5. Together they form a multi-domain HAN.

The SGHs interact with the *utility's access network* (UAN) and its *advanced metering infrastructure* (AMI) through an *energy service interface* (ESI). The AMI domain comprises *AMI Meters* (AM), *AMI Submeters* (ASM), and an AMI *Head End* (HE). The HE is a local hub (concentrator), that controls all meters downstream from it and interfaces to the utility's wide area/backhaul network upstream from it. Each AMI HE supports up to 250 AM and/or ASM nodes forming an AMI domain (in dense urban areas 150 to 200 meters are a frequently encountered maximum). Further, a network supports up to 16 AMI domains, delivering support for up to $16 \cdot 250 = 4000$ AMI devices. The ability to support 16 domains with 250 nodes each is a general property of G.hn not limited to Smart Grid/AMI applications. Domains may be formed over any kind of wiring. The nodes within a domain are grouped into SGH and non-SG nodes. For security reasons, non-SG nodes are logically separated from SGH nodes using a secure upper-layer protocol.

In every domain there is a domain master that coordinates operation of all nodes. G.hn nodes of different domains communicate with each other via *Interdomain Bridges* (IDBs). IDBs are simple data communications bridges on OSI Layer 3 and above, enabling a node in one domain to pass data to a node in another domain. In a multi-domain situation, a *Global Master* (GM) provides coordination of resources, priorities, and operational characteristics between G.hn domains. Besides, G.hn domains can be bridged to alien (non-G.hn) domains, for example, to IEEE 1901/1901.2, wireless technologies, and so forth. For example, besides the UAN/AMI connection through the ESI, the HAN might be connected to the outside world via a DSL or cable modem gateway communicating with the G.hn HAN via an alien domain bridge.

6.3. HomePlug Green PHY. In analogy to the ITU G.hn *low complexity profile* (LCP), the HomePlug Powerline Alliance has released the HomePlug Green PHY specification. HomePlug GreenPhy is a subset of HomePlug AV that is intended for use within Smart Grid applications. It is compatible to HomePlug AV, AV2, and IEEE 1901 and is optimized for low power applications and costs. GreenPhy uses the most robust communication mode (called ROBO) of HomePlug AV technology. OFDM carrier spacing, signal preamble, frame control, and FEC are identical to HomePlug AV to ensure interoperability. This also results in identical coverage and reliability to Smart Grid functions. CSMA/CA is used as channel access scheme. Data rates are up to 10 Mbit/s. GreenPhy nodes may use long power save periods if a higher latency is acceptable. In the sleep state modems have only a 3% power consumption compared to the awake time resulting in an average power reduction of more than 90% with respect to standard HomePlug AV products.

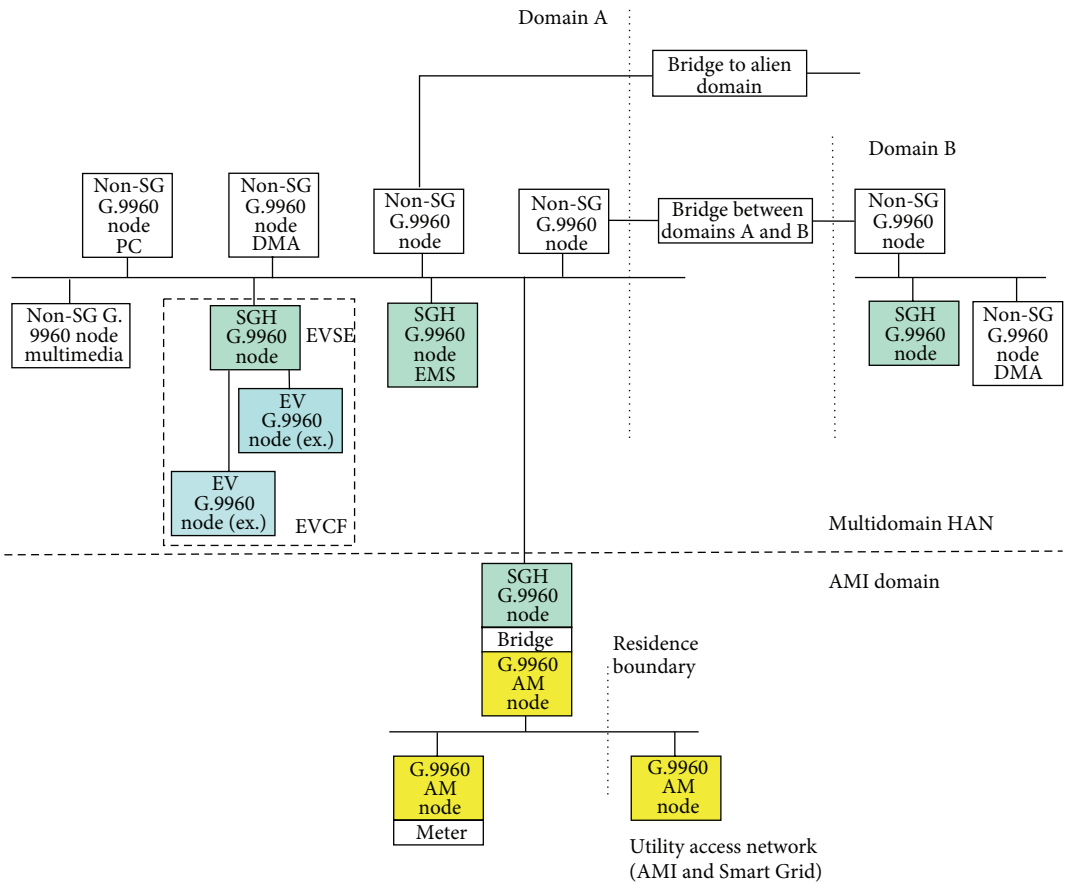

Figure 5: Smart Grid HAN implementation based on G.9960, based on Figure 22 in [138].

7. Application Layer Interoperability

Although there is still an ongoing struggle between stakeholders promoting the various NB-PLC and BB-PLC technologies, it seems clear that IP support will become paramount to assure Smart Grid interoperability. Along these lines, the *HomePlug Alliance* (promoting IEEE P1901) and the *HomeGrid Forum* (promoting ITU G.hn/G.hnem) have joint forces with wireless stakeholders, namely, the *Wi-Fi Alliance* and the *ZigBee Alliance*. Together they formed the *Consortium for Smart Energy Profile 2 (SEP2) Interoperability* with the intention "to develop common testing documents and processes for certifying SEP 2 interoperability" [131].

Smart Energy Profile 2 (SEP2) originates from smart energy-related upper-layer developments (OSI layer 5 to 7) within the ZigBee Alliance [132]. It is compatible to the International Electrotechnical Commission's *Common Information Model* (CIM) [133, 134] and is kept link layer agnostic. Further, it is described using *extensible markup language* (XML) [135] and follows a *Representational State Transfer* (REST) [136] architecture. Moreover, data transport takes place using *Hypertext Transfer Protocol* (HTTP) [137].

By opting for these widely adopted building blocks, SEP 2 can benefit from a large knowledge and developer base and is regarded by NIST as an import specification to allow interoperability between various home area network devices [13].

8. Conclusions

Although there are strong wireless and wireline communication competitors, it is believed that *power line communications* (PLCs) will fulfill various communication tasks in upcoming Smart Grid deployments as PLC provides the natural upgrade from simple electricity conductors to hybrid and bidirectional electricity and data communication solutions.

Seen from a utility point of view, one of the main advantages of PLC is the full control over the physical medium, without the need to depend on third party providers like telecommunication companies or cellular operators. Especially, PLC standardization and harmonization as, for example, fostered by NIST PAP15, are important for the PLC industry as a whole when defending territory against competing wireless and wireline options.

In terms of *broadband PLC* (BB-PLC), the coexisting standards ITU-T G.hn and IEEE P1901 with the expanded HomePlug AV2 specification are currently the most promising, while *narrowband PLC* (NB-PLC) standardization, that is, IEEE P1901.2 and ITU-T G.hnem, is still ongoing.

Cases where NB-PLC and BB-PLC systems operate on the same physical medium will become more frequent with increasing PLC system penetration. Nevertheless, coexistence of the two should be straight forward as they are using different frequency ranges. In general, interconnections between different coexisting NB-PLC and BB-PLC standards

can then be established by OSI Layer 3 bridges as suggested, for example, in [108, 138].

When looking at higher layer interoperability, the recent foundation of the Consortium for Smart Energy Profile 2 Interoperability, is a promising step forward to allow users and operators to deploy various wireless and wireline technologies with seamless interoperability at the application layer which is regarded as essential for widespread Smart Grid acceptance.

Acknowledgments

Although this article is distributed under the Creative Commons Attribution License, it should be noted that it is in parts based on [70, 75]. The material from [70] and [75] is reproduced with explicit permission of John Wiley & Sons, Ltd. and John Wiley & Sons, Inc., respectively. However, related copyrights and the right to grant reprint permissions of the affected parts remain with John Wiley & Sons. This work is cofinanced by the Spanish Ministry of Science and Innovation (MICINN) Program INNCORPORA-Torres Quevedo 2011, and Grant SICCNALS, TEC2011-28219. Further it is cofunded by the European Social Fund and the European Regional Development Fund within the ERDF Operational Programme of the Valencian Community 2007–2013, grant no. IMIDTA/2011/905. Special thanks also to the BreezeSolve Team for editorial support.

References

[1] B. A. Hamilton, J. Miller, and B. Renz, "Understanding the benefits of smart grid," Tech. Rep. DOE/NETL-2010/1413, U.S. Department of Energy, 2010.

[2] L. T. Berger and K. Iniewski, *Smart Grid—Applicacions, Communications and Security*, John Wiley & Sons, 2012.

[3] M. Burns, "NIST SGIP catalog of standards," October 2010, http://collaborate.nist.gov/twiki-sggrid/bin/view/SmartGrid SGIPCatalogOfStandards.

[4] P. A. Brown, "Power line communications—past present and future," in *Proceedings of the International Symposium on Power Line Communicatons and Its Applications (ISPLC '99)*, pp. 1–8, September 1999.

[5] S. Galli, A. Scaglione, and Z. Wang, "For the grid and through the grid: the role of power line communications in the smart grid," *Proceedings of the IEEE*, vol. 99, no. 6, pp. 998–1027, 2011.

[6] The OPEN meter Consortium, "Description of current state-of-the-art of technology and protocols description of state-of-the-art of PLC-based access technology," European Union Project Deliverable FP7-ICT-2226369, d 2.1 Part 2, Version 2.3, March 2009, http://www.openmeter.com/files/deliverables/OPEN-Meter%20WP2%20D2.1%20part2%20v2.3.pdf.

[7] IEEE Communication Society, "Best readings in power line communications," http://www.comsoc.org/best-readings.

[8] SMB Smart Grid Strategic Group (SG3), "IEC smart grid standardization roadmap," June 2010, http://www.iec.ch/smartgrid/downloads/sg3_roadmap.pdf.

[9] ITU Telecommunication Standardization Bureau Policy & Technology Watch Division, "Activities in smart grid standardization repository," version 1.0., April 2010, http://www.itu.int/dmspub/itu-t/oth/48/01/T48010000020002PDFE.pdf.

[10] DKE German Commission for Electrical, Electronic & Information Technologies of DIN and VDE, "The German roadmap e-energy/smart grid," April 2010, http://www.e-energy.de/documents/DKE%20Roadmap%20SmartGrid%20230410%20Engllish.pdf.

[11] State Grid Corporation of China, "SGCC framework and roadmap for strong and smart grid standards," August 2010, http://collaborate.nist.gov/twiki-sggrid/pub/SmartGrid/SGIPDocumentsAndReferencesSGAC/China_State_Grid_Framework_and_Roadmap_for_SG_Standards.pdf.

[12] International Energy Agency, "Technology roadmap smart grids," April 2011, http://www.iea.org/publications/freepublications/publication/smartgrids_roadmap.pdf.

[13] National Institute of Standards and Technology (NIST) and U.S. Department of Commerce, "NIST framework and roadmap for smart grid interoperability standards," NIST Draft Publication, Release 1. 0, January 2010.

[14] K. Dostert, *Powerline Communications*, Prentice-Hall, 2001.

[15] G. Held, *Understanding Broadband Over Power Line*, CRC Press, 2006.

[16] P. Sobotka, R. Taylor, and K. Iniewski, "Broadband over power line communications: Home networking, broadband access, and smart power grids," in *Internet Networks: Wired, Wireless, and Optical Technologies*, K. Iniewski, Ed., Devices, Circuits, and Systems, chapter 8, CRC Press, New York, NY, USA, 2009.

[17] R. Pighi and R. Raheli, "On multicarrier signal transmission for high-voltage power lines," in *Proceedings of the 9th International Symposium on Power Line Communications and Its Applications (ISPLC '05)*, pp. 32–36, Vancouver, Canada, April 2005.

[18] H. Duckhwa and L. Younghun, "A study on the compound communication network over the high voltage power line for distribution automation system," in *Proceedings of the 2nd International Conference on Information Security and Assurance (ISA '08)*, pp. 410–414, Busan, Korea, April 2008.

[19] R. Aquilu, I. G. J. Pijoan, and G. Sanchez, "Highvoltage multicarrier spread-spectrum system field test," *IEEE Transactions on Power Delelivery*, vol. 24, no. 3, pp. 1112–1121, 2009.

[20] N. Strandberg and N. Sadan, "HV-BPL phase 2 field test report," Tech. Rep. DOE/NETL-2009/1388, U.S. Department of Energy, 2009.

[21] P. A. A. F. Wouters, P. C. J. M. van der Wielen, J. Veen, P. Wagenaars, and E. F. Wagenaars, "Effect of cable load impedance on coupling schemes for MV power line communication," *IEEE Transactions on Power Delivery*, vol. 20, no. 2, pp. 638–645, 2005.

[22] R. Benato and R. Caldon, "Application of PLC for the control and the protection of future distribution networks," in *Proceedings of the IEEE International Symposium on Power Line Communications and Its Applications (ISPLC '07)*, pp. 499–504, Pisa, Italy, March 2007.

[23] A. Cataliotti, A. Daidone, and G. Tinè, "Power line communication in medium voltage systems: characterization of MV cables," *IEEE Transactions on Power Delivery*, vol. 23, no. 4, pp. 1896–1902, 2008.

[24] P. Meier, M. Bittner, H. Widmer et al., "Pathloss as a function of frequency, distance and network topology for various LV and MV European powerline networks," The OPERA Consortium, Project Deliverable, EC/IST FP6 Project no. 507667 D5v0.9, April 2005.

[25] A. Rubinstein, F. Rachidi, M. Rubinstein et al., "EMC guidelines," The OPERA Consortium, IST Integrated Project Deliverable D9v1. 1, IST Integrated Project No 026920, October 2008.

[26] A. Vukicevic, *Electromagnetic compatibility of power line communication systems [Ph.D. thesis]*, École Polytechnique Fédérale de Lausanne, Lausanne, Switzerland, 2008.

[27] Broadband Forum, "Next generation broadband access," White Paper MR-185, Issue: 1, August 2009, http://www.broadband-forum.org/marketing/download.

[28] D. E. Nordell, "Communication systems for distribution automation," in *Proceedings of the IEEE Transmission and Distribution Conference and Exposition*, Bogota, Colombia, April 2008.

[29] S. Mak and D. Reed, "TWACS, a new viable twoway automatic communication system for distribution networks. Part I: outbound communication," *IEEE Transactions on Power Apparatus and Systems*, vol. 101, no. 8, pp. 2941–2949, 1982.

[30] S. Mak and T. Moore, "TWACS, a new viable twoway automatic communication system for distribution networks. Part II: inbound communication," *IEEE Transactions on Power Apparatus and Systems*, vol. 103, no. 8, pp. 2141–2147, 1984.

[31] The OPEN meter Consortium, "Open Public Extended Network Metering, Home page," http://www.openmeter.com/.

[32] PRIME Alliance, "Powerline related intelligent metering evolution (PRIME)," http://www.prime-alliance.org,.

[33] Électricité Réseau Distribution France, "G3-plc: Open standard for smart grid implementation," http://www.maximintegrated.com/products/powerline/g3-plc/.

[34] K. Razazian, M. Umari, A. Kamalizad, V. Loginov, and M. Navid, "G3-PLC specification for powerline communication: Overview, system simulation and field trial results," in *Proceedings of the 14th Annual International Symposium on Power Line Communications and its Applications (ISPLC '10)*, pp. 313–318, Rio de Janeiro, Brazil, March 2010.

[35] P. Siohan, A. Zeddam, G. Avril et al., "State of the art, application scenario and specific requirements for PLC," OMEGA, European Union Project Deliverable D3.1 v1.0, IST Integrated Project No ICT-213311, 2008, http://www.ict-omega.eu/publications/deliverables.html.

[36] G. Wood and M. Newborough, "Dynamic energy-consumption indicators for domestic appliances: environment, behaviour and design," *Energy and Buildings*, vol. 35, no. 8, pp. 821–841, 2003.

[37] International Organization for Standartization, "Building automation and control systems—part 5: data communication protocol," international standard ISO 16484-5, 2010.

[38] International Organization for Standartization, "Information technology—Home electronic system (HES) architecture—part 3–5: Media and media dependent layers Powerline for network based control of HES class 1," international standard ISO/IEC 14543-3-5, First edition, May 2007.

[39] International Organization for Standartization, "Interconnection of information technology equipment—Control network protocol—Part 3: Power line channel specification," international standard ISO/IEC 14908-3, Rvision 11, January 2011.

[40] American National Standards Institute/Electronic Industries Association (ANSI/EIA), "Control network power line (PL) channel specification," ANSI/CEA-709.2-A, September 2006.

[41] L. T. Berger and G. Moreno-Rodríguez, "Power line communication channel modelling through concatenated IIR-filter elements," *Academy Publisher Journal of Communications*, vol. 4, no. 1, pp. 41–51, 2009.

[42] S. Galli, "A simplified model for the indoor power line channel," in *Proceedings of the IEEE International Symposium on Power Line Communications and its Applications (ISPLC '09)*, pp. 13–19, Dresden, Germany, April 2009.

[43] F. J. Cañete Corripio, L. Díez del Río, and J. T. Entrambasaguas Muňoz, "A time variant model for indoor power-line channels," in *Proceedings of the International Symposium on Power Line Communications (ISPLC '01)*, pp. 85–90, Malmö, Sweden, March 2001.

[44] F. J. Cañete, L. Díez, J. A. Cortňs, and J. T. Entrambasaguas, "Broadband modelling of indoor powerline channels," *IEEE Transactions on Consumer Electronics*, vol. 48, no. 1, pp. 175–183, 2002.

[45] J. A. Cortňs, F. J. Cañete, L. Díez, and J. T. Entrambasaguas, "Characterization of the cyclic short-time variation of indoor power-line channels response," in *Proceedings of the International Symposium on Power Line Communications and Its Applications (ISPLC '05)*, pp. 326–330, Vancouver, Canada, April 2005.

[46] F. J. Cañete Corripio, J. A. Cortňs Arrabal, L. Díez del Río, and J. T. Entrambasaguas Muňoz, "Analysis of the cyclic short-term variation of indoor power line channels," *IEEE Journal on Selected Areas in Communications*, vol. 24, no. 7, pp. 1327–1338, 2006.

[47] M. Zimmermann and K. Dostert, "A multipath model for the powerline channel," *IEEE Transactions on Communications*, vol. 50, no. 4, pp. 553–559, 2002.

[48] M. Babic, M. Hagenau, K. Dostert, and J. Bausch, "Theoretical postulation of PLC channel model," The OPERA Consortium, IST Integrated Project Deliverable D4v2.0, March 2005.

[49] H. Liu, J. Song, B. Zhao, and X. Li, "Channel study for medium-voltage power networks," in *Proceedings of the IEEE International Symposium on Power Line Communications (ISPLC '06)*, pp. 245–250, Orlando, Fla, USA, March 2006.

[50] European Telecommunication Standards Institute (ETSI), "Powerline Telecommunications (PLT); MIMO PLT; Part 1: Measurement Methods of MIMO PLT," February 2012.

[51] C. R. Paul, *Analysis Of Multiconductor Transmission Lines*, John Wiley & Sons, 1994.

[52] T. Magesacher, P. Ödling, P. O. Börjesson et al., "On the capacity of the copper cable channel using the common mode," in *Proceedings of the IEEE Global Telecommunications Conference*, pp. 1269–1273, November 2002.

[53] T. Sartenaer, *Multiuser communications over frequency selective wired channels and applications to the powerline access network [Ph.D. thesis]*, Faculty of Applied Sciences of the Université Catholique de Louvain, Louvain-la-Neuve, Belgium, 2004.

[54] D. Sabolic, A. Bazant, and R. Malaric, "Signal propagation modeling in power-line communication networks," *IEEE Transactions on Power Delivery*, vol. 20, no. 4, pp. 2429–2436, 2005.

[55] T. Banwell and S. Galli, "A novel approach to the modeling of the indoor power line channel part I: circuit analysis and companion model," *IEEE Transactions on Power Delivery*, vol. 20, no. 2, pp. 655–663, 2005.

[56] S. Galli and T. Banwell, "A novel approach to the modeling of the indoor power line channel—part II: transfer function and its properties," *IEEE Transactions on Power Delivery*, vol. 20, no. 3, pp. 1869–1878, 2005.

[57] T. Magesacher, P. Ödling, P. O. Börjesson, and S. Shamai, "Information rate bounds in common-mode aided wireline communications," *European Transactions on Telecommunications*, vol. 17, pp. 533–545, 2006.

[58] R. Hashmat, P. Pagani, A. Zeddam, and T. Chonave, "MIMO communications for inhome PLC Networks: Measurements and results up to 100 MHz," in *Proceedings of the 14th Annual International Symposium on Power Line Communications and its Applications (ISPLC '10)*, pp. 120–124, Rio de Janeiro, Brasil, March 2010.

[59] R. Hashmat, P. Pagani, A. Zeddam, and T. Chonave, "A channel model for multiple input multiple output in-home power line networks," in *Proceedings of the IEEE International Symposium on Power Line Communications and Its Applications (ISPLC '11)*, pp. 35–41, April 2011.

[60] F. Versolatto and A. M. Tonello, "A MIMO PLC random channel generator and capacity analysis," in *Proceedings of the IEEE International Symposium on Power Line Communications and Its Applications (ISPLC '11)*, pp. 66–71, Udine, Italy, April 2011.

[61] L. T. Berger, A. Schwager, P. Pagani, and D. Schneider, *MIMO Power Line Communications: Narrow and Broadband Standards, EMC, and Advanced Processing*, CRC Press, 2013.

[62] A. Schwager, W. Bäschlin, J. Moreno et al., "European MIMO PLC field measurements: overview of the ETSI STF410 campaign & EMI analysis," in *Proceedings of the International Symposium on Power Line Communications and Its Applications (ISPLC '12)*, Beijing, China, 2012.

[63] D. Schneider, A. Schwager, W. Baschlin, and P. Pagani, "European MIMO PLC field measurements: channel analysis," in *Proceedings of the 16th IEEE International Symposium on Power Line Communications and Its Applications (ISPLC '12)*, pp. 304–309, March 2012.

[64] A. Schwager, *Powerline communications: significant technologies to become ready for integration [Ph.D. thesis]*, Universität Duisburg-Essen, Fakultät für Ingenieurwissenschaften, Duisburg-Essen, Germany, 2010.

[65] A. Schwager, D. Schneider, W. Baschlin, A. Dilly, and J. Speidel, "MIMO PLC: theory, measurements and system setup," in *IEEE International Symposium on Power Line Communications and Its Applications (ISPLC '11)*, pp. 48–53, April 2011.

[66] M. Zimmermann and K. Dostert, "An analysis of the broadband noise scenario in power-line networks," in *Proceedings of the International Symposium on Power Line Communications and Its Applications (ISPLC '00)*, pp. 131–138, Limerick, Ireland, April 2000.

[67] F. J. Cañete, J. A. Cortñs, L. Díez, and J. T. Entrambasaguas, "Modeling and evaluation of the indoor power line transmission medium," *IEEE Communications Magazine*, vol. 41, no. 4, pp. 41–47, 2003.

[68] R. Hashmat, P. Pagani, A. Zeddam, and T. Chonavel, "Measurement and analysis of inhome MIMO PLC channel noise," in *Proceedings of the 4th Workshop on Power Line Communications*, Boppard, Germany, September 2010.

[69] P. Pagani, R. Hashmat, A. Schwager, D. Schneider, and W. Baschlin, "European mimo plc field measurements: noise analysis," in *Proceedings of the 16th IEEE International Symposium on Power Line Communications and Its Applications (ISPLC '12)*, pp. 310–315, March 2012.

[70] L. T. Berger, "Broadband powerline communications," in *Convergence of Mobile and Stationary Next Generation Networks*, K. Iniewski, Ed., chapter 10, pp. 289–316, John Wiley & Sons, Hoboken, NJ, USA, 2010.

[71] A. Schwager, L. Stadelmeier, and M. Zumkeller, "Potential of broadband power line home networking," in *Proceedings of the 2nd IEEE Consumer Communications and Networking Conference (CCNC '05)*, pp. 359–363, January 2005.

[72] M. Tlich, P. Pagani, G. Avril et al., "PLC channel characterization and modelling," OMEGA, European Union Project Deliverable D3.3 v1.0, IST Integrated Project No ICT-213311, December 2008, http://www.ict-omega.eu/publications/deliverables.html.

[73] European Committee for Electrotechnical Standardization (CENELEC), "Signalling on low-voltage electrical installations in the frequency range 3 kHz to 148,5 kHz - Part 1: General requirements, frequency bands and electromagnetic disturbances," Standard EN 50065-1, September 2010.

[74] National Institute of Standards and Technology (NIST), "Priority Action Plan 15 (PAP15): Harmonize Power Line Carrier Standards for Appliance Communications in the Home," Coexistence of narrow band power line communication technologies in the unlicensed FCC band, April 2010, http://www.fcc.gov/encyclopedia/rules-regulations-title-47.

[75] L. T. Berger, "Wireline communications in smart grids," in *Smart Grid—Applicacions, Communications and Security*, L. T. Berger and K. Iniewski, Eds., chapter 7, John Wiley & Sons, Hoboken, NJ, USA, 2012.

[76] FCC, "Title 47 of the code of federal regulations (CFR)," Tech. Rep. 47 CFR §15, Federal Communications Commission, 2008, http://www.fcc.gov/encyclopedia/rules-regulations-title-47,.

[77] Association of Radio Industries and Businesses (ARIB), "Power line communication equipment (10kHz-450kHz)," sTD-T84, Ver. 1.0, (in Japanese), November 2002, http://www.arib.or.jp/english/html/overview/doc/1-STD-T84v1_0.pdf.

[78] Comité International Spécial des Perturbations Radioélectriques, "Information technology equipment; Radio disturbance characteristics; Limits and methods of measurement," ICS CISPR, International Standard Norme CISPR 22:1997, 1997.

[79] Comité International Spécial des Perturbations Radioélectriques, "Specification for radio disturbance and immunity measuring apparatus and methods part 1-1: Radio disturbance and immunity measuring apparatus—Measuring apparatus," 2003.

[80] Comité International Spécial des Perturbations Radioélectriques, "Amendment to CISPR 22: Clarification of its application to telecommunicationsystem on the method of disturbance measurement at ports used for PLC," 2003.

[81] Comité International Spécial des Perturbations Radioélectriques, "CISPR 22 am3 f1 ed. 5.0, Limits and method of measurement of broadband telecommunication equipment over power lines," February 2008.

[82] Comité International Spécial des Perturbations Radioélectriques, "Report on mitigation factors and methods for power line telecommunications," February 2008.

[83] European Telecommunication Standards Institute (ETSI), "PowerLine Telecommunications (PLT); Coexistence between PLT Modems and Short Wave Radio broadcasting services," August 2008.

[84] Comité International Spécial des Perturbations Radioélectriques, "Amendment 1 to CISPR 22 ed. 6.0: Addition of limits and methods of measurement for conformance testing of power line telecommunication ports intended for the connection to the mains," July 2009.

[85] C. European Committee for Electrotechnical Standardization, "Power line communication apparatus used in low-voltage installations—Radio disturbance characteristics—Limits and methods of measurement—Part 1: Apparatus for in-home use," November 2012.

[86] R. Razafferson, P. Pagani, A. Zeddam et al., "Report on electro magnetic compatibility of power line communications," OMEGA, European Union Project Deliverable D3.3 v3.0, IST Integrated Project No ICT-213311, April 2010, http://www.ict-omega.eu/publications/deliverables.html.

[87] Institute of Electrical and Electronics Engineers, "IEEE standard for power line communication equipment–Electromagnetic compatibility (EMC) requirements–Testing and measurement methods," January 2011.

[88] PRIME Alliance, "Draft standard for PoweRline Intelligent Metering Evolution," 2010, www.prime-alliance.org/Docs/Ref/PRIME-Spec_v1.3.6.pdf.

[89] ITU - Telecommunication Standardization Sector STUDY GROUP 15, "Narrowband orthogonal frequency division multiplexing power line communication transceivers for G3-PLC networks," Recommendation ITU-T G.9903, October 2012, approved.

[90] ITU - Telecommunication Standardization Sector STUDY GROUP 15, "Narrowband orthogonal frequency division multiplexing power line communication transceivers for PRIME networks," Recommendation ITU-T G.9904, October 2012, approved.

[91] NIST Priority Action Plan 15, "Narrowband PLC coexistence requirement," October 2011, http://collaborate.nist.gov/twiki-sggrid/pub/SmartGrid/PAP15PLCForLowBitRates/Requirements_on_NB_PLC_coexistence_Final_Oct_11r1.xls.

[92] I. Berganza, A. Sendin, and J. Arriola, "Prime: powerline intelligent metering evolution," in *Proceedings of the CIRED Seminar 2008: SmartGrids for Distribution*, pp. 1–3, Frankfurt, Germany, June 2008.

[93] National Institute of Standards and Technology (NIST), U.S. Department of Commerce, "Specification for the advanced encryption standard (AES)," Federal Information Processing Standards Publication 197, November 2001.

[94] International Electrotechnical Commission (IEC), "Distribution automation using distribution line carrier systems—Part 4: Data communication protocols—Section 32: Data link layer—Logical link control (LLC)," November 1997.

[95] International Electrotechnical Commission (IEC), "Electricity metering—Data exchange for meter reading, tariff and load control—Part 62: Interface classes," Standard IEC 62056-62, 2nd ed., November 2006.

[96] International Electrotechnical Commission (IEC), "Distribution automation using distribution line carrier systems—Part 5-1: Lower layer profiles—The spread frequency shift keying (S-FSK) profile," Standard IEC 61334-5-1, 2nd ed., 2001.

[97] Electricité Réseau Distribution France (ERDF), "G3-PLC physical layer specification," August 2009, http://www.maximintegrated.com/products/powerline/pdfs/G3-PLC-Physical-Layer-Specification.pdf.

[98] Electricité Réseau Distribution France (ERDF), "G3-PLC MAC layer specification," August 2009, http://www.maximintegrated.com/products/powerline/pdfs/G3-PLC-MAC-Layer-Specification.pdf.

[99] Electricité Réseau Distribution France (ERDF), "G3-PLC profile specification," August 2009, http://www.maximintegrated.com/products/powerline/pdfs/G3-PLC-Profile-Specification.pdf.

[100] K. Razazian, "G3-PLC provides an ideal communication platform for the smart gird," in *Proceedings of the IEEE Internatinal Symposium on Power Line Communications and Its Applications (ISPLC '10)*, Rio de Janeiro, Brazil, March 2010.

[101] Institute of Electrical and Electronics Engineers, "Local and metropolitan area networks—Specific requirements part 15.4: Wireless medium access control (MAC) and physical layer (PHY) specifications for low-rate wireless personal area networks (WPANs)," standard for Information Technology—Telecommunications and Information Exchange Between Systems, September 2006.

[102] Z. Shelby and C. Bormann, *6LoWPAN: The Wireless Embedded Internet*, John Wiley & Sons, 2009.

[103] S. Deering and R. Hinden, "Internet protocol, version 6 (IPv6) specification," RFC 2460, December 1998, http://tools.ietf.org/html/rfc2460.

[104] American National Standards Institute (ANSI), "Utility industry end device data tables," ANSI Standard C12.19, 2008.

[105] International Electrotechnical Commission (IEC), "Electricity metering—Data exchange for meter reading, tariff and load control—Part 61: Object identification system (OBIS)," international standard IEC 62056-61, second edition, November 2006.

[106] International Electrotechnical Commission (IEC), "Electricity metering—Data exchange for meter reading, tariff and load control—Part 62: Interface classes," international standard IEC 62056-62, second edition, November 2006.

[107] M. Hoch, "Comparison of PLC G3 and PRIME," in *Proceedings of the IEEE International Symposium on Power Line Communications and Its Applications (ISPLC '11)*, pp. 165–169, Udine, Italy, April 2011.

[108] V. Oksman and J. Zhang, "G.HNEM: the new ITU-T standard on narrowband PLC technology," *IEEE Communications Magazine*, vol. 49, no. 12, pp. 36–44, 2011.

[109] J. LeClare, "IEEE 1901.2 PAP15 update," Presentation to NIST PAP-15 SGIP Plenary Meeting, Chicago, Ill, USA, at Grid Interop, December 2010, http://collaborate.nist.gov/twiki-sggrid/pub/SmartGrid/PAP15PLCForLowBitRates/PAP15_IEEE_1901_2_Update.ppt.

[110] ITU - Telecommunication Standardization Sector STUDY GROUP 15, "Narrowband orthogonal frequency division multiplexing power line communication transceivers—Power spectral density specification," Recommendation ITU-T G.9901, November 2012, approved.

[111] ITU - Telecommunication Standardization Sector STUDY GROUP 15, "Narrowband orthogonal frequency division multiplexing power line communication transceivers for G.hnem networks," Recommendation ITU-T G.9902, October 2012, approved.

[112] O. Monnier, "TI delivers flexible power line communications solutions," White Paper, September 2010, http://www.ti.com/lit/wp/slyy026/slyy026.pdf.

[113] Intellon, http://www.intellon.com/.

[114] DS2, Design of Systems on Silicon, "Your world. Connected," http://www.marvell.com/.

[115] Gigle Networks Inc., http://www.giglenetworks.com/.

[116] Panasonic Communications Co., Ltd., "Ideas for life," http://panasonic.net/corporate/segments/psn/.

[117] HomePlug Powerline Alliance, https://www.homeplug.org/home.

[118] Universal Powerline Association (UPA), http://en.wikipedia.org/wiki/Universal_Powerline_Association.

[119] High Definition Power Line Communication Alliance (HD-PLC), http://www.hd-plc.org/.

[120] International Telecommunications Union (ITU), "ITU-T Recommendation G.9960," Unified highspeed wire-line based home networking transceivers—Foundation, August 2009.

[121] International Telecommunications Union (ITU), "ITU-T Recommendation G.9961, Data link layer (DLL) for unified high-speed wire-line based home networking transceivers," June 2010.

[122] International Telecommunications Union (ITU), "ITU-T Recommendation G.9963, Unified high-speed wire-line based home networking transceivers—Multiple Input/Multiple Output (MIMO)," g.9963 (ex G.hn-MIMO), September 2011.

[123] HomeGrid Forum, "For any wire, anywhere in your home," http://www.homegridforum.org/.

[124] Institute of Electrical and Electronic Engineers (IEEE), "Standards Association, Working group P1901," IEEE standard for broadband over power line networks: Medium access control and physical layer specifications, http://grouper.ieee.org/groups/1901/.

[125] Institute of Electrical and Electronics Engineers (IEEE) Standards Association and P1901 Working Group, "IEEE P1901 Draft standard for broadband over power line networks: Medium access control and physical layer specifications," July 2009.

[126] Institute of Electrical and Electronics Engineers Standards Association and Working Group P1905.1, "Draft standard for a convergent digital home network for heterogeneous technologies," 2012, http://standards.ieee.org/develop/project/1905.1.html.

[127] S. Galli, A. Kurobe, and M. Ohura, "The inter-PHY protocol (IPP): A simple coexistence protocol for shared media," in *Proceedings of the IEEE International Symposium on Power Line Communications and its Applications (ISPLC '09)*, pp. 194–200, Dresden, Germany, April 2009.

[128] H. C. Ferreira, L. Lampe, J. Newbury, and T. G. Swart, Eds., *Power Line Communications: Theory and Applications For Narrowband and Broadband Communications Over Power Lines*, John Wiley & Sons, 2010.

[129] International Telecommunications Union (ITU), "ITU-T Recommendation G.9972, Coexistence mechanism for wireline home networking transceivers," June 2010.

[130] D. Su and S. Galli, "PAP 15 recommendations to SGIP on broadband PLC coexistence," December 2010, http://collaborate.nist.gov/twiki-sggrid/pub/SmartGrid/PAP15PLCForLowBitRates/PAP15_-_Recommendation_to_SGIP_BB_CX_-_Final_-_APPROVED_2010-12-02.pdf.

[131] Consortium for Smart Energy Profile 2 Interoperability, "CSEP consortium for SEP2 interoperability," 2011, http://www.csep.org/.

[132] ZigBee Alliance, "Smart Energy Profile 2.0 Application Protocol Specification," v 0.7, April 2010, http://zigbee.org/Standards/ZigBeeSmartEnergy/Version20Documents.aspx.

[133] International Electrotechnical Commission (IEC), "Application integration at electric utilities—System interfaces for distribution management," international standard IEC 61968, under development.

[134] International Electrotechnical Commission (IEC), "Energy management system application program interface (EMS-API)," international standard IEC 61970, under development.

[135] World Wide Web Consortium (W3C), "Extensible markup language (XML) 1.0," W3C Recommendation, 5th ed., November 2008, http://www.w3.org/TR/REC-xml/.

[136] R. T. Fielding, *Architectural styles and the design of network-based software architectures [Ph.D. thesis]*, University of California, Irvine, Calif, USA, 2000, http://www.ics.uci.edu/~fielding/pubs/dissertation/top.htm.

[137] R. T. Fielding, J. Gettys, J. C. Mogul et al., "RFC 2616: Hypertext Transfer Protocol – HTTP/1.1," June 1999, http://tools.ietf.org/html/rfc2616.

[138] V. Oksman and J. Egan, "Applications of ITUT G.9960, ITU-T G.9961 transceivers for Smart Grid applications: Advanced metering infrastructure, energy management in the home and electric vehicles," Telecommunication Standartization Sector of ITU; Series G: Transmission Systems and Media, Digital Systems and Networks, ITU-T Technical Paper, June 2010, http://www.itu.int/dms_pub/itu-t/opb/tut/T-TUT-HOME-2010-PDF-E.pdf.