Hindawi
Journal of Electrical and Computer Engineering
Volume 2019, Article ID 9674054, 10 pages
https://doi.org/10.1155/2019/9674054

*Research Article*

# Power Transformer Fault Severity Estimation Based on Dissolved Gas Analysis and Energy of Fault Formation Technique

**Edwell T. Mharakurwa**,[1] **G. N. Nyakoe**,[2] **and A. O. Akumu**[3]

[1]*Department of Electrical Engineering, Pan African University Institute for Basic Sciences, Technology and Innovation (PAUSTI), P.O. Box 62000-00200, City Square, Nairobi, Kenya*
[2]*Department of Electrical Engineering, Jomo Kenyatta University of Agriculture and Technology (JKUAT), P.O. Box 62000-00200, City Square, Nairobi, Kenya*
[3]*Department of Electrical Engineering, Tshwane University of Technology (TUT), Private Bag X680 0001, Pretoria, South Africa*

Correspondence should be addressed to Edwell T. Mharakurwa; edweltaf@gmail.com

Received 7 October 2018; Revised 13 December 2018; Accepted 10 January 2019; Published 3 February 2019

Academic Editor: Luigi Piegari



Decision making on transformer insulation condition based on the evaluated incipient faults and aging stresses has been the norm for many asset managers. Despite being the extensively applied methodology in power transformer incipient fault detection, solely dissolved gas analysis (DGA) techniques cannot quantify the detected fault severity. Fault severity is the core property in transformer maintenance rankings. This paper presents a fuzzy logic methodology in determining transformer faults and severity through use of energy of fault formation of the evolved gasses during transformer faulting event. Additionally, the energy of fault formation is a temperature-dependent factor for all the associated evolved gases. Instead of using the energy-weighted DGA, the calculated total energy of related incipient fault is used for severity determination. Severity of faults detected by fuzzy logic-based key gas method is evaluated through the use of collected data from several in-service and faulty transformers. DGA results of oil samples drawn from transformers of different specifications and age are used to validate the model. Model results show that correctly detecting fault type and its severity determination based on total energy released during faults can enhance decision-making in prioritizing maintenance of faulty transformers.

## 1. Introduction

Power transformers are crucial equipment for viable and dependable performance of a power system. Hence, their continuity of operation is the daily business of power utilities. Accordingly, their opportune upkeep based on detected incipient faults and or deterioration state is essential in realizing this objective. When faults manifestation is evidenced within a transformer, ensuing maintenance planning is of utmost importance; otherwise, operational malfunctions emanate that may affect in system failure.

A long in-service transformer generates gases even at normal working conditions. However, as time passes, it is regularly subjected to electric, mechanical, chemical, and thermal stresses that causes high rate of gases being evolved in the transformer insulation system [1]. However, the gas content escalates in the existence of an anomaly. Internal faults usually manifest by oil decomposition producing gases such as hydrogen ($H_2$), methane ($CH_4$), acetylene ($C_2H_2$), ethylene ($C_2H_4$), and ethane ($C_2H_6$), while cellulose degradation produces methane ($CH_4$), hydrogen ($H_2$), carbon monoxide (CO), and carbon dioxide ($CO_2$). Carbon monoxide (CO) and carbon dioxide ($CO_2$) reveal paper degradation-related faults, ethylene ($C_2H_4$) and ethane ($C_2H_6$) are substantial in indicating increase of oil temperature, partial discharge being low-level energy yields hydrogen ($H_2$) and methane ($CH_4$), and arcing can be acknowledged by noting the evolution of acetylene ($C_2H_2$) and hydrogen ($H_2$) [1–8].

Analysis of the levels and ratios of dissolved combustible gasses in transformer insulating fluids through nonintrusive in-service DGA have grown into one of the most dominant techniques available to diagnose probable transformer incipient faults. Since DGA is a process, several techniques

highlighted in [8] have been used to interpret it. However, these different interpretation techniques sometimes produce varying results. This is typically one of the main challenging responsibilities of an asset manager in ascertaining transformer faults. In specific significant fault diagnostic approaches, e.g., Duval triangles and pentagons, IEC, and Rogers' gas ratios, the carbon oxides are not involved in fault identification [9–11]. They are simply used as accompanying gases to assess if the fault encompasses paper insulation. Thus, crucial information they characterize in relation to insulation harm is overlooked. Therefore, the key gas diagnostic approach is employed in this paper so as to cater for every fault gas formation for interpretation of fault severity based on total energy of fault gases released during faults. In addition, exclusively depending on DGA cannot quantify seriousness of faulty which is important in determining maintenance ranking of fleet of faulty transformers. In the literature, soft computing techniques have been applied to improve accuracies of conventional DGA techniques [12–17]. These intelligent techniques managed to classify the fault types; nevertheless, the severity information is overlooked. DGA integrated with thermodynamics technique has been implemented also in fault identification inclusive of its severity [18]. However, the thermodynamics theory approach emphasis was entirely based on the hydrocarbon breakdowns of the oil. Henceforth, the carbon dioxide involvement in quantifying faulty severity is overlooked. In [19], through the use of *n*-octane decomposition process, the impact of carbon dioxide was neglected in ascertaining the transformer fault severity. The concept of thermodynamics approach shows that manifestation of different dissolved gases in mineral oils requires different energy of formation. The thermodynamic theory detected the severity of the fault through energy correction relative factor assigned to each of the combustible gases, exclusively for the five gases ($H_2$, $CH_4$, $C_2H_6$, $C_2H_4$, and $C_2H_2$) [19]. In [20], a fuzzy-based method integrated with thermodynamic theory is proposed to predict transformer faults and severity. The model showed interesting results. However, in their model, IEC codes were used in developing the fuzzy rules. Thus, the contribution of carbon oxides in fault detection is neglected. In addition, transformer faulty severity is determined based on the ratio between the energy-weighted ratios on only three gases, i.e., $CH_4$, $C_2H_4$, and $C_2H_2$.

In this paper, a fuzzy logic fault detection model is developed based on the seven key gases (DGA) interlinked with total energy involved in the faulting process. The fault detection model is centered on seven key gases as the inputs, and the fault type is the output of the fuzzy logic model. In addition, the output also signifies the criticality of the fault stress. Instead of using the energy correction relative factor or the energy weighted ratio of gases, this paper proposes the use of total energy involved in the formation of the fault to determine the fault severity. Although, in DGA-based diagnostics, there are methods which can diagnose faults accurately with fewer number of gases, like three gases in Duval triangles or pentagons, this study adopts the seven key gases approach mainly to impact on quantifying accurately the severity of the detected faults which involves these characteristic key gases. The use of total fault energy helps in quantifying the seriousness of the fault especially in the event that more than one transformer suffers from the same type of fault. Accordingly, insulation deterioration and damage are influenced by the extent to which the fault has occurred. The transformer insulation subjected to the fault with high energy incurs more stresses triggering accelerated insulation deterioration. Additionally, energy of fault approach can also help in determining the severity of multiple incipient faults happening simultaneously in the transformer. For example, the proposed fuzzy-DGA model can detect high arcing fault energy, but at the same time, the insulation is experiencing thermal fault and its severity is shown by significant amount of its oil thermal faulting energy, and it signifies that the transformer is experiencing multiple faults in which its severity can be quantified well by energy of fault approach. Therefore, the asset manager decision will not be biased towards arcing fault only but also on the severity of the thermal-related fault. For that reason, fault type and total energy of the fault indicated by the magnitude of the evolved gases should be taken into consideration in transformer condition monitoring systems. Depending on the amount of energy involved in the faulting process, the asset managers can judge whether to maintain the transformer on-line or off-line depending on the criticality of the faults.

## 2. Thermodynamic Decomposition of Insulation Oils

Crude oil is the source of the commonly used liquid insulation in oil immersed transformers which is the mineral oil. This insulating oil mainly comprises of alkanes, aromatic, and hydrocarbons products in different magnitudes. In [18–22], it is noted that the aromatic and hydrocarbons ring chains are significantly stable under thermal and electrical stresses but give in to early oxidation reactions. Although thermally and electrically unstable than aromatic and napthenic rings, the paraffinic compounds possess superior insulating abilities and are more steady during oxidation reactions. However, it is these alkanes which when under electrical and thermal stresses, their byproducts are the fault dissolved gases. In [18, 19, 21, 22], *n*-octane ($C_8H_{18}$) was used as the primary composite of the breakdown process to demonstrate the thermodynamic theorem, even though $C_8H_{18}$ was removed in the course of the breakdown process of the crude oil. In this paper, another starting decomposition material in the form of eicosane ($C_{20}H_{42}$) as suggested in [20] is used to illustrate the thermodynamic approach in determining the fault severity through energy of formation.

The nonintrusive DGA approach consisting of the seven gases is used in transformer fault diagnosis. From the eicosane ($C_{20}H_{42}$) molecule, five reactions are used to represent how the decomposition of mineral oil results in evolving of $H_2$, $CH_4$, $C_2H_6$, $C_2H_4$, and $C_2H_2$ gases inside the transformer [20]:

$$C_{20}H_{42}\,(l) = CH_4\,(g) + C_{19}H_{38}\,(l) \tag{1}$$

$$C_{20}H_{42}\,(l) = H_2\,(g) + C_{20}H_{40}\,(l) \tag{2}$$

$$C_{20}H_{42}\,(l) = C_2H_2\,(g) + H_2\,(g) + C_{18}H_{38}\,(l) \quad (3)$$

$$C_{20}H_{42}\,(l) = C_2H_4\,(g) + C_{18}H_{38}\,(l) \quad (4)$$

$$C_{20}H_{42}\,(l) = C_2H_6\,(g) + C_{18}H_{36}\,(l) \quad (5)$$

where l and g represent liquid and gaseous states, respectively.

Thermal decomposition of paper insulation consisting mainly of cellulosic material leads to the formation of carbon oxides. As the glycosidic bonds in the cellulose break down, carbon monoxide is one of the byproducts as highlighted by the reaction in the following equation [20–22]:

$$\frac{1}{6}C_6H_{12}O_6\,(s) = CO\,(g) + H_2\,(g) \quad (6)$$

where s represents the solid state.

Oxidation of carbon monoxide in the presence of oxygen produces carbon dioxide as the byproduct as highlighted in the following equation:

$$CO\,(g) + \frac{1}{2}O_2\,(g) = CO_2\,(g) \quad (7)$$

*2.1. Proposed Fault Severity Modeling.* The severity of a fault, electrical and/or thermal, in a transformer can be determined by taking hold of the increasing concentration of the gas responsible for fault [2]. However, this technique does not include the amount of energy involved during the faulting process since different gases require different energy of formation in the event of faults. It is suggested that these energy differences ought to be considered in establishing the severity of a fault.

The amount of energy needed to release the fault gases from the crude oil during the faulting process is considered in determining the transformer fault severity. This faulting energy is calculated using the enthalpy change of reaction ($\Delta H^o$ reaction) as in the following expression [18–22]:

$$\Delta H^o_{\text{reaction}} = \Delta H^o_{\text{f, products}} - \Delta H^o_{\text{f, reactants}}, \quad (8)$$

where ($\Delta H^o_f$) is the enthalpy of formation of products or reactants.

Under the standard state, the change in energy that excites the generation of one mole of a molecule from its principle composites is characterized as the standard enthalpy of formation ($\Delta H^o_f$) [23]. In Table 1, the enthalpies of formation for products of $C_{20}H_{42}$ breakdown reactions as denoted in equations (1)–(5) are presented.

The standard enthalpy change of a chemical reaction $\Delta H^o_{\text{reaction}}$ characterizes the fault energy involved in generating the dissolved gases. To illustrate computation of fault energy of reaction caused by $CH_4$ gas (equation (1)), the $\Delta H^o_{\text{reaction}}$ (kJ/mol) is computed using equation (8):

$$\Delta H^o_{\text{reaction}} = [(-74.8 - 345.9) - (-455.8)] = 35.1 \text{ kJ/mol}. \quad (9)$$

Similarly, the enthalpy change of reaction for the remaining dissolved gases can be computed. The calculated enthalpies change of reactions for the dissolved gases using the eicosane decomposition reactions are highlighted in Table 2.

Table 1: Standard enthalpy of formation [6, 20].

| Molecule | $\Delta H^o_f$ (kJ/mol) | Molecule | $\Delta H^o_f$ (kJ/mol) |
|---|---|---|---|
| $C_{20}H_{42}$ | −455.8 | $CH_4$ | −74.8 |
| $C_{20}H_{40}$ | −357.9 | $H_2$ | 0 |
| $C_{19}H_{38}$ | −345.9 | $C_2H_2$ | 226.8 |
| $C_{18}H_{38}$ | −414.6 | $C_2H_4$ | 52.3 |
| $C_{18}H_{36}$ | −314.1 | $C_2H_6$ | −84.7 |
| $C_6H_{12}o_6$ | 1273.4 | CO | −110.5 |
| $O_2$ | 0 | $CO_2$ | −393.5 |

As articulated in [19], at standard states (S.T.P) of 273 K and 101.3 kPa, a mole of gas occupies 22.4 L. Converting parts per million (ppm) in to mol/L at S.T.P, the ppm is multiplied by mol/22.4 L. Since fault energy of the reaction is measured in kJ/mol, the resultant energy must be converted to kJ/kL. Usually, the dissolved gases analysis are done at nonstandard temperature ($\theta$) degrees Celsius. This paper considered this nonstandard temperature to be the measured oil sampling temperature for DGA. Thus, a temperature correction factor of $\{(273 + \theta)/273\}$ ought to be multiplied by the kJ/kL.

Therefore, the total fault energy (T.F.E) in kJ/kL evaluated using the dissolved gas analysis is given by equation (10). It is upon this equation, transformer severity was determined from the following equation:

$$|\text{T.F.E}| = \left(\frac{273 + \theta}{273 \times 22400}\right)\left[\sum_{i=1}^{n}\left(\Delta H^o_{r,i} \times c_i\right)\right], \quad (10)$$

where $\Delta H^o_{r,i}$ is the calculated enthalpies of reaction of corresponding dissolved fault gas and $c_i$ represents the current gas concentration in ppm.

## 3. Fault Diagnosis Model

Power transformers faulting usually manifests when the electrical and thermal insulation withstand limits are being exceeded. The dissolved gas analysis (DGA) is commonly used to diagnose these incipient faults within oil immersed transformer. Since transformer incipient faults are categorized into electrical and thermal driven, each fault category evolves certain distinctive gases. In this paper, fault determination is achieved through inputting the key gases concentration determined by DGA in to a fuzzy logic diagnostic tool. The fuzzy logic diagnostic tool is developed upon data driven from Figure 1 to determine transformer faults categorized in Table 3. During normal operation of a transformer gases are also evolved, faulting through manifestation of dissolved gases is realized when the evolved gas acceptable limits have been exceeded. Table 4 gives the dissolved gas limits.

*3.1. Fault Assessment Based on Fuzzy Logic.* An aspect of artificial intelligence (AI) in the form of fuzzy logic demonstrates the nature of human rational and excise decision-making based on linguistic elucidation in problem solving situations. A fuzzy logic model is established based on the transformer fault assessment diagram in Figure 1 which has 8

Table 2: Calculated enthalpies of the fault gases.

| Reaction in equation | Gas | $\Delta H^{o}_{reaction}$ (kJ/mol) |
|---|---|---|
| 1 | $CH_4$ | 35.1 |
| 2 | $H_2$ | 97.9 |
| 3 | $C_2H_2$ | 268 |
| 4 | $C_2H_4$ | 93.5 |
| 5 | $C_2H_6$ | 57 |
| 6 | CO | 101.7 |
| 7 | $CO_2$ | 283 |

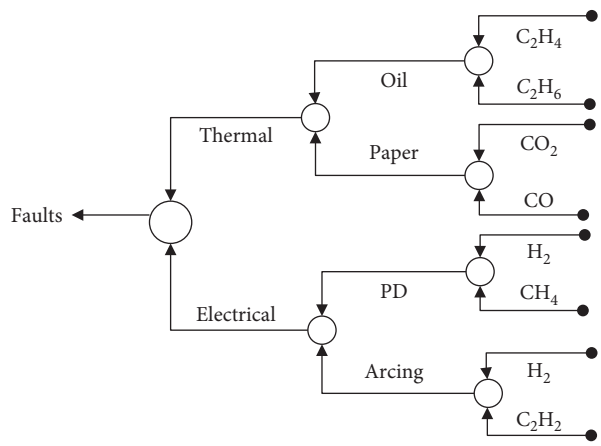


Figure 1: Faults and generated gases.

Table 3: Fault categories [24].

| No. | Characteristic | Fault type |
|---|---|---|
| 1 | F0 | No fault |
| 2 | F1 | Partial discharge (PD) |
| 3 | F2 | Thermal fault of low temperature range $T < 300^{\circ}$C (LTH) |
| 4 | F3 | Thermal fault of medium temperature range $300^{\circ}\text{C} < T < 700^{\circ}$C (MTH) |
| 5 | F4 | Discharge (arc) of low energy (LED) |
| 6 | F5 | Thermal fault of high temperature range $T > 700^{\circ}$C (HTH) |
| 7 | F6 | Discharge (arc) of high energy (HED) |

Table 4: IEEE DGA limits [2].

| Evolved gas | Normal limits (acceptable) (ppm) | Extreme limits (unacceptable) (ppm) |
|---|---|---|
| Hydrogen | <100 | >1800 |
| Methane | <120 | >1000 |
| Acetylene | <1 | >35 |
| Ethylene | <50 | >200 |
| Ethane | <65 | >150 |
| Carbon monoxide | <350 | >1400 |
| Carbon dioxide | <2500 | >10 000 |

inputs, each characterized by the magnitude of concentration detected at a particular time and temperature. These variables are categorized into sets depending on their cross-correlation in signifying the type of faulting within the transformer. In this paper, trapezoidal membership functions (MFs) are chosen to represent both the inputs and the output variables for all fuzzy models. Trapezoidal MFs are preferred because of its simplicity and computational efficiency [6, 25]. The five linguistic labels employed for all the inputs and fault stress output membership functions are normal, safe, moderate, high, and critical. The fault type output membership functions were assigned the following labels: no fault (F0), partial discharges (F1), low-level thermal faults (F2), medium-level thermal faults (F3), low energy discharges (F4), high-level thermal faults (F5), and high energy discharges (F6).

A set of intuitive rules that define the input-output mapping were developed. Contrasting to mathematical models, the rules are developed in the linguistic form of IF-THEN statements. In this paper, experts experience aided by subjective reasoning was adopted in assigning of weights to different attributes during fuzzy rule formulation of the developed fuzzy models. Fuzzy rule formulation criteria can differ depending on the experts' experience and the weights assigned to different variables. Typical examples of the formulated rules are read as follows:

IF (ethylene is normal) and (ethane is safe), THEN (oil thermal faulting level is safe)

IF (acetylene is safe) and (hydrogen is high), THEN (arcing level is safe)

IF (paper thermal is high) and (oil thermal is moderate), THEN (paper-oil faulting level is high)

IF (thermal is critical) and (electrical is high), THEN (fault stress is high and fault type is F5)

*3.1.1. Oil-Related Thermal Faults.* As the transformer mineral oil is thermally overstressed, it breaks down and evolves $C_2H_4$ and $C_2H_6$ as the chief gases. These gases are soluble in oil; their magnitude determines the extent to which the fault stress reaches. An oil thermal faulting level submodel is established based on these two key gases. The two inputs ($C_2H_4$) and ($C_2H_6$) universe of discourse were measured on a scale of 0–200 ppm and 0–150 ppm, respectively. The oil thermal faulting level is drawn on a scale of 0 to 1 and is marked severe when reaching to 1.

*3.1.2. Paper-Related Thermal Faults.* Overheating of transformer solid insulation leads to paper related faults which manifest in the transformer by evolving high concentrations of carbon monoxide and carbon dioxide. The magnitude and rate of increment of these gases determine the degree of paper faulting within the transformer. CO and $CO_2$ are the primary input variables to the paper thermal fault level fuzzy logic model. The linguistic labels for CO and $CO_2$ are partitioned on a scale of 0 to 1800 ppm and 0 to 12000 ppm respectively, whilst the output of the fault level spans from 0 to 1.

*3.1.3. Arcing.* When a transformer is experiencing arcing fault, it is recommended not to retain the transformer in-service until proper maintenance is done. Arcing is a high-energy electrical discharge activity that results in the evolving of $C_2H_2$ and $H_2$ as fundamental gases in the transformer insulation system. Accordingly, $C_2H_2$ and $H_2$ are the two inputs whose linguistic labels are partitioned on a range of

0–50 ppm and 0–1800 ppm, respectively. From the thermodynamic decomposition of mineral oil, acetylene formation requires more energy relative to that of hydrogen; thus, weighting factors of 0.8 and 0.2 during fuzzy rule formulation were assigned to acetylene and hydrogen, respectively. The output of the model with membership functions between 0 and 1 characterizes the growth of electrical arcing with increase in magnitude of the input variables concentration.

*3.1.4. Partial Discharge (PD).* Electrical discharge within the transformer in the form of low energy is quantified as partial discharge (PD). This activity within the transformer results in formation of $CH_4$ and $H_2$ as the principal gases in the transformer insulation system. The magnitude of these gases connotes the amount of buildup of partial discharges in the transformer. Input variables of $H_2$ and $CH_4$ are drawn on a scale of 0–1800 ppm and 0–1200 ppm respectively, whilst the output variable universe of discourse for the PD level is measured on a scale of 0 to 1. Electrical discharge (PD) criticality is deemed serious when reaching to 1.

*3.1.5. Thermal Fault Level.* Transformer thermal faults can be evidenced through paper-oil overheating or in worse scenarios of conductor melting and or transformer explosion. Long-term emerging thermal faulting can be assessed by considering the key gases dissolved in oil which portrays overheating of paper (CO and $CO_2$) and oil ($C_2H_6$ and $C_2H_4$). Thus, by merging thermal stress in paper and oil, the resulting thermal fault stress enforced to the transformer can be estimated through the fuzzy model. The inputs to the total thermal faulting model are oil thermal stress and paper thermal stress (the outputs of thermal stress level of oil and paper fuzzy models and are drawn on a scale of 0 to 1). Through subjective reasoning and knowledge gained from power utility experts, the assigned weights of 0.6 and 0.4 to thermal level in paper and oil, respectively, are used during fuzzy rule formulation. The paper thermal stress level was assigned more weight since it was deemed dangerous as the paper insulation is in direct contact with live conductors. Thus, failure of paper insulation can lead to catastrophic faulting of the transformer. The thermal fault level output also spans from 0 to 1. The transformer thermal fault stress level for oil-paper for different set of input variables can also be deduced from the surface graph, Figure 2.

*3.1.6. Electrical Faults.* The electrical fault stresses are caused by localized excessive field leading to faulting manifested by partial discharge, tacking, treeing, arcing, flashovers, and short-circuiting [26]. The resulting electrical fault level is developed by merging the partial discharge and arcing fuzzy models. Inputs to the electrical fault model involve arcing level and partial discharge level. Both the input and output membership functions span between 0 and 1. Arcing being a high-energy fault that can result in catastrophic damages relative to PD, its assigned weight in fuzzy rule formulation was 0.7 and 0.3 for PD. The surface view of the overall electrical fault level is highlighted in Figure 3.

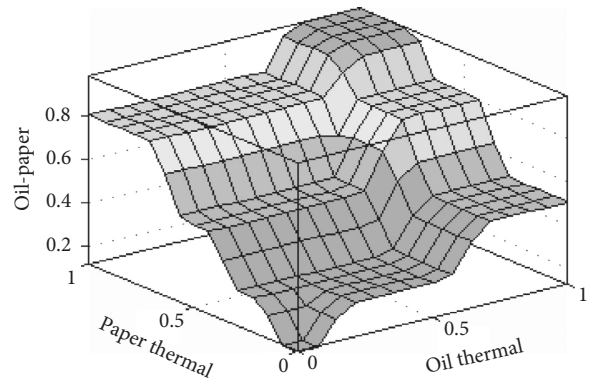


Figure 2: Surface graph-overall thermal fault level.

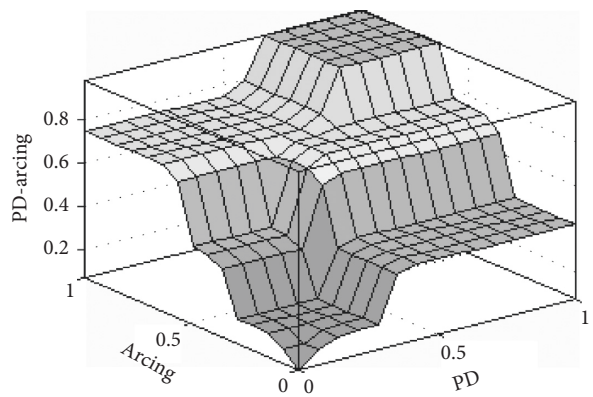


Figure 3: Surface graph-overall electrical fault level.

*3.1.7. Overall Fault Assessment.* Transformer in-service can suffer from electrical and or thermal faults. The overall fault stress and severity determination were arrived at after incorporating the thermal and electrical fault level fuzzy models. The inputs and thermal and electrical membership functions are established on a scale of 0 to 1 as shown in Figures 4 and 5. Since both faults have a high damaging effect on the transformer insulation system, the fuzzy rule formulation weighting for both electrical and thermal faults was perceived to be equal (0.5). The output fault stress membership functions are measured on the scale of 0 to 1 (normal to critical), whilst the fault type output membership functions span from 0–12 as highlighted in Figures 6 and 7.

The overall transformer fault stress level for different sets of inputs can also be interpreted from a fuzzy rule surface viewer as shown in Figure 8.

Based on the concentration of the dissolved key gases evolved in the transformer insulation system, the fault and severity determination model was established. The fault model depends on fuzzy logic-DGA diagnostic tool, whilst severity determination was upon the calculated energy of formation during faulting activity. The output of the fuzzy model shows the estimated fault type and the stress level of the fault (state of the insulation system). The formulated equation for fault severity is as in equation (10). Thus, using equation (10), oil, paper thermal fault energies, arcing fault energy, PD fault energy, and total fault stress energy were estimated based on the corresponding gases responsible for

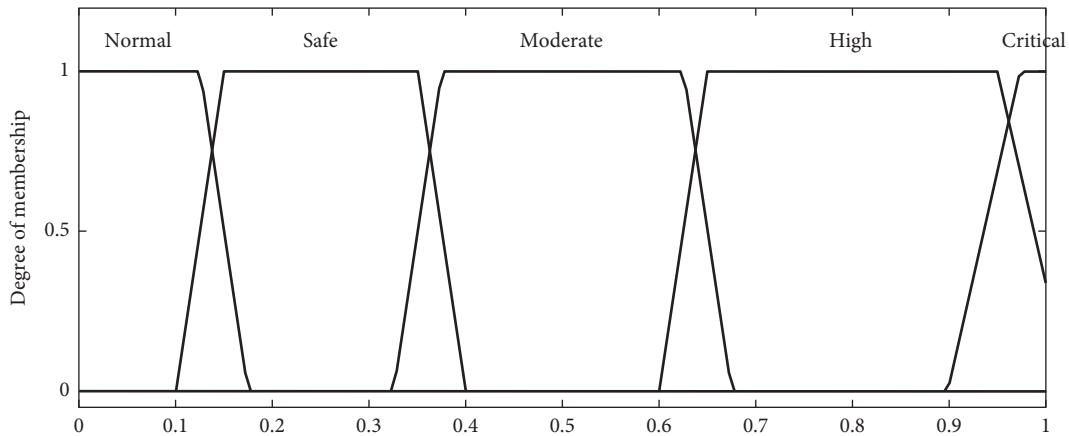


Figure 4: Input variable MF-thermal fault.

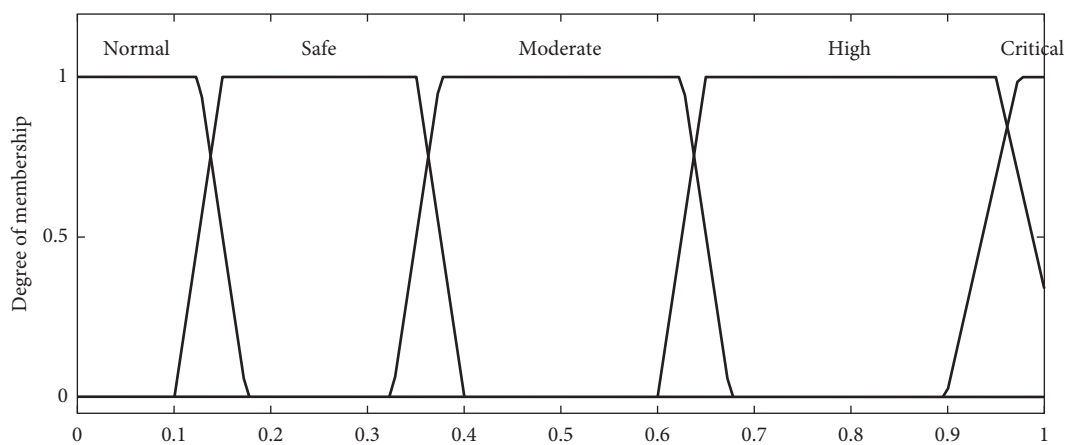


Figure 5: Input variable MF-electrical fault.

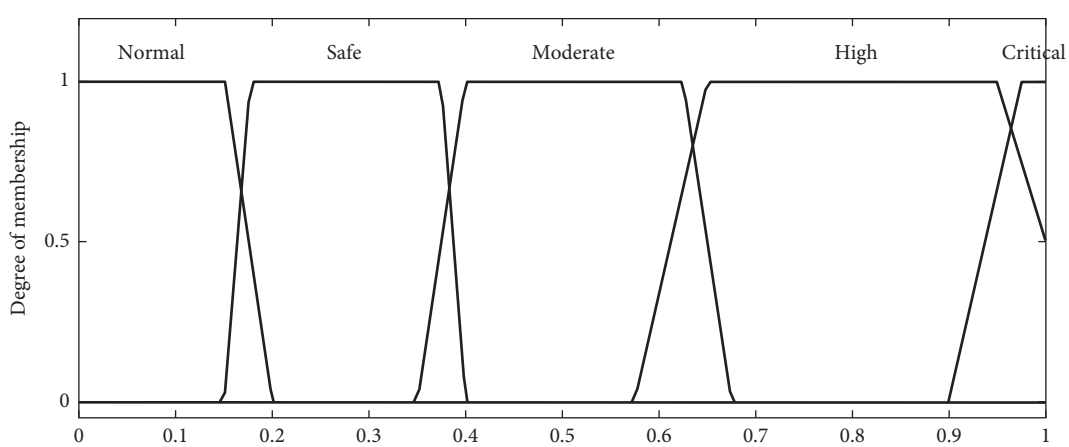


Figure 6: Output variable MF-fault stress.

the fault which is also dependent on the oil sampling temperature. For instance, PD fault energy consists of summation of energy of formation of hydrogen gas and methane gas. From the thermodynamic point of view, enthalpy of reaction changes as a function of the real operating temperature considering thermal capacities of the reacting agents. However, in this paper, oil sampling temperatures were used in the formulation of energy of fault since offline DGA was used to quantify the concentration of the dissolved gases. The severity labels of LOW, MEDIUM, and HIGH were established after determining the allowable lower and upper limits of fault energy of different types of fault as per the given temperature using equation (10). The recommended limits for the respective dissolved gases are

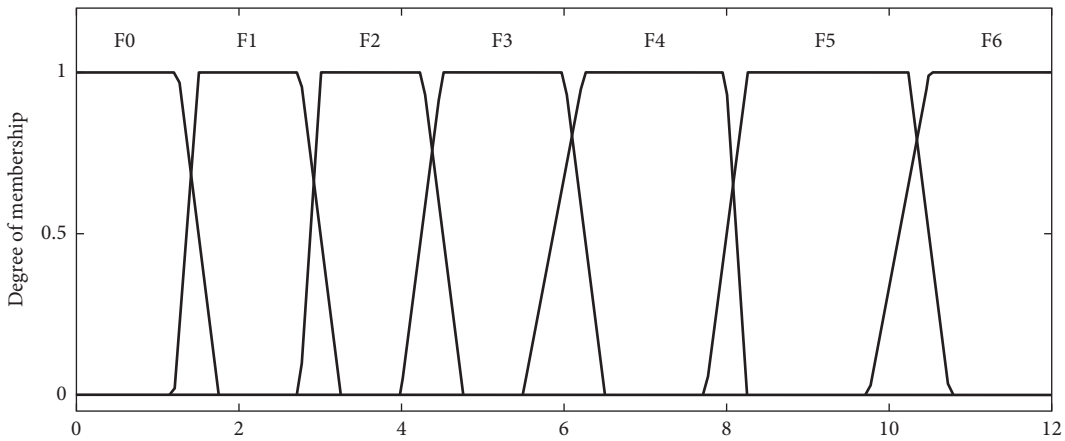


Figure 7: Output variable MF-fault type.

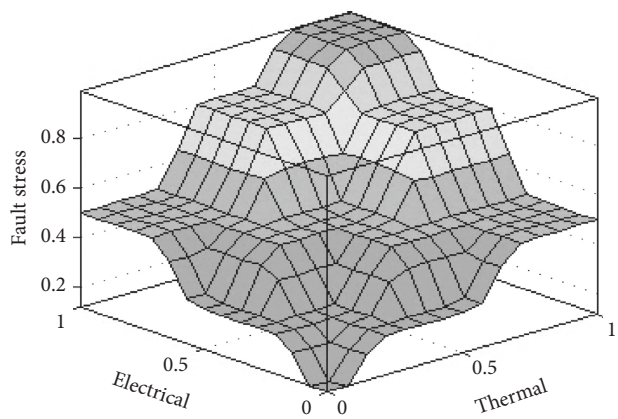


Figure 8: Overall fault stress surface graph.

highlighted in Table 4. If the calculated actual total faulting energy at that particular temperature is within the range of the lower limit, LOW fault severity label is assigned to that particular fault. Else, the fault is labeled HIGH if it approaches or exceeds the upper fault energy limit level.

The overall proposed model developed upon MATLAB/Simulink platform is depicted in Figure 9 where, t is the step time for fuzzy model simulation.

## 4. Results and Discussions

To evaluate the validity of the proposed methodology for fault identification and severity determination, several oil samples from transformers of different magnitudes and various services spans have been presented as primary data. Dissolved gas analysis was performed in all the oil samples from which the evolved gas concentration was quantified. Since it was difficult to deduce the inaccuracies of distinct instruments and human errors of each data set from different sources, a 95% confidence level was assumed to cater for these uncertainties. The outcome of the developed fuzzy-DGA model was based on the IEEE key gases acceptable limits as denoted in Table 4. In addition, the proposed fault severity determination mathematical model was established upon the decomposition of crude oil in which eicosane ($C_{20}H_{42}$) was used as the starting decomposition material. Thus, the evolved gases enthalpy change of reaction was arrived at using this proposed decomposing product. The inputs to the fuzzy model were the concentration of the seven key gases evolved within the transformer insulation system. Type of fault and fault stress level represented the model outputs. Table 5 depicts the DGA (in ppm) for 20 oil samples from different transformers performed at different sampling temperatures, and the resultant fuzzy logic model results inclusive of fault severity. The determination of the fault severity relied on the energy involved in generation of gases present during fault event. In addition, the fuzzy model output of the fault stress level also helps in signifying the severity of the stress subjected to insulation system thus, indirectly determining fault severity.

In Table 5, faults are identified as follows: normal condition or no fault (F0), partial discharges (F1), low-level thermal faults (F2), medium-level thermal faults (F3), low energy discharges (F4), high-level thermal faults (F5), and high energy discharges (F6). Also, shown in Table 5 are the actual fault (A.FAULT), estimated fault (E.FAULT), actual energy involved during faulting (A.F.ENERGY), actual fault energy lower limit (A.F.L.L), and total fault energy (T.F.E). The energy involved during fault was upon different temperatures, which are assumed as the DGA oil sampling temperature in this study. The lower limit energy of formation

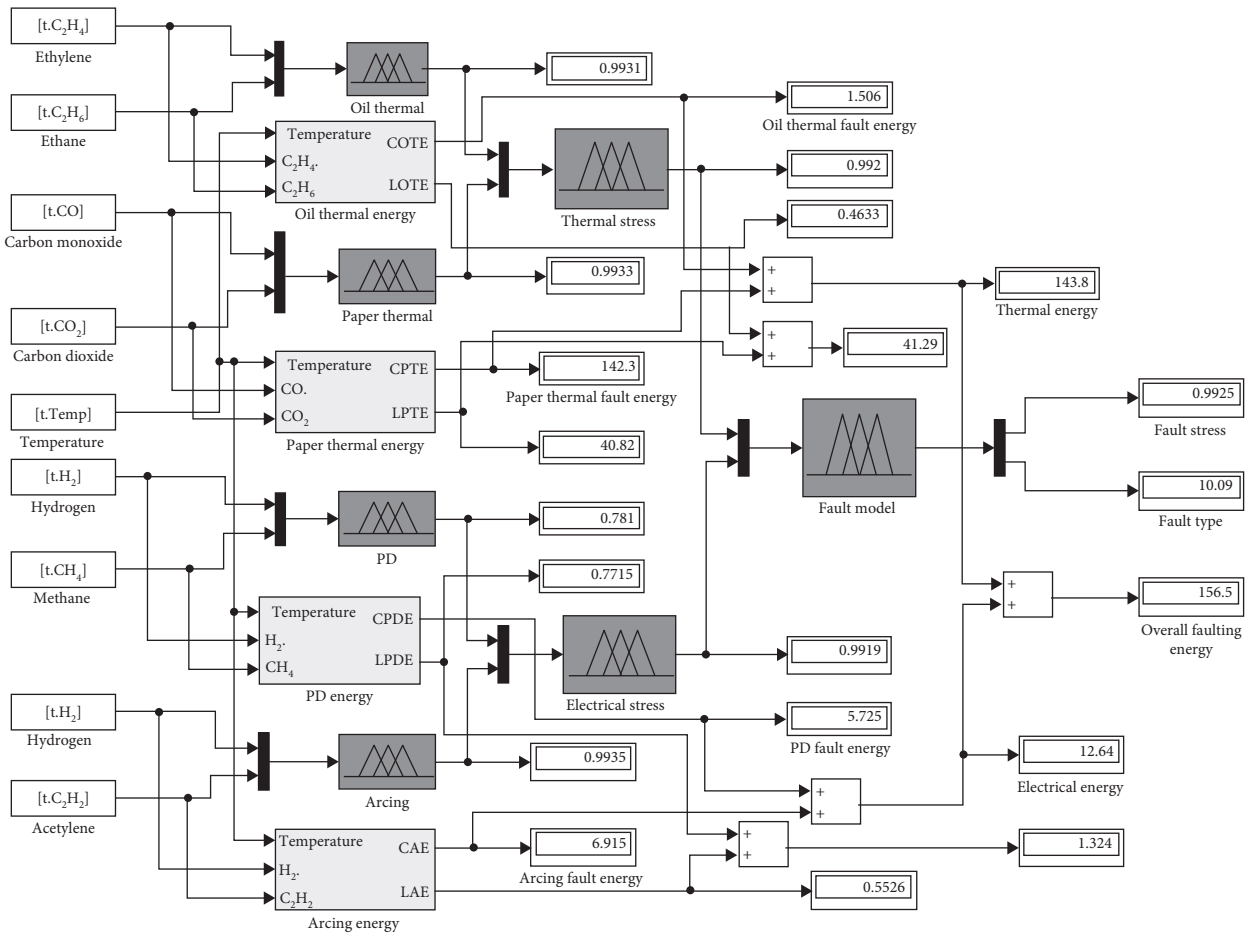


Figure 9: Proposed fault and severity model.

was established upon the allowable lower limit (Table 4) of the individual key gas involved during faults.

As an illustration, the model's results for transformer 7 are also shown in Figure 9. It can be observed from the high value of 0.9925 that the overall stress level is significant and fault severity is high; thus, the transformer needs immediate attention. This high fault stress level is due to high concentration of the key gases evolving in the transformer. The model output for transformers 7, 17, and 20 shows the existence of two types of faults. The existence of these faults was evidenced by high concentration of principal gases evolved during the faulting process. These different types of faults are also evidenced by significant amount of total fault energy evolved during these respective faulting activities. This shows that fault energy can also be used to determine if the transformer is experiencing multiple faults. It can be observed from the proposed model output pattern that most of the fault diagnostic conform with that of the IEC standard fault interpretation used by the power utility expert, except for transformer 9. For transformer 9, the proposed Fuzzy-DGA based model interprets the fault to be a low-energy discharge fault (F4), while the utility expert's diagnosis is a medium-level thermal fault (F3). Although the actual fault of the transformer was F4, the model shows F3 which was indicated by high traces of faulting principal gases ($H_2$ and $CH_4$). Although condition of transformers 6 and 11 reflected no fault condition of the transformer, energy of formation of faulting gases shows that even at normal operating working conditions, dissolved gases still manifest within the transformer.

Table 6 shows a comparison of the results of the diagnosis done for different fault types using different diagnostic approaches. It also shows the percentage diagnostic accuracy for each fault type. The results show that the Fuzzy Duval-EWR method obtained high fault detecting accuracy. However, the proposed Fuzzy key gas-TFE model is also capable of detecting the transformer incipient fault types satisfactorily. In addition, Table 7 highlights the comparison of severity accuracies of fault diagnosis models. The severity accuracy was determined from the correctly diagnosed known faults. The proposed Fuzzy key gas-TFE shows that the use of total energy involved in the formation of the fault to determine the fault severity improves the severity determination accuracy compared to use of the energy correction factor or the energy weighted ratio of gases proposed by the other two models.

The benefits of considering energy involved during faults are that severity of individual fault from multifaulting can be easily noted. In addition, the overall faulting energy can help asset managers to quantify the overall severity of the faulting transformers in order to rank them for maintenances. Faulting resulting in high-energy intensity initiates intense harm on the insulation system.

Table 5: Test data and model results.

| | Test data | | | | | | | | Model results | | | | | |
|---|---|---|---|---|---|---|---|---|---|---|---|---|---|---|
| Tx. no. | $H_2$ | $CH_4$ | $C_2H_2$ | $C_2H_6$ | $C_2H_4$ | CO | $CO_2$ | Temp. | A.FAULT | E.FAULT | A.F.E.L.L (kJ/kL) | A.F.ENERGY (kJ/kL) | T.F.E (kJ/kL) | Severity |
| 1 | 234 | 300 | 52 | 56 | 29 | 193 | 713 | 50 | F4 | F4 | 1.3 | 3.7 | 15.7 | Low |
| 2 | 607 | 119 | 0 | 192 | 5 | 161 | 2320 | 62 | F4 | F4 | 1.3 | 6.7 | 44.0 | Low |
| 3 | 11 | 4 | 1 | 4 | 4 | 558 | 7624 | 48 | F2 | F2 | 39.4 | 116.3 | 116 | Medium |
| 4 | 74 | 65 | 35 | 194 | 172 | 1272 | 10529 | 55 | F5 | F5 | 40.3 | 136.2 | 137.6 | High |
| 5 | 71 | 347 | 18 | 127 | 79 | 504 | 2481 | 52 | F2 | F2 | 38.2 | 40.8 | 42.5 | Low |
| 6 | 16 | 34 | 10 | 14 | 16 | 188 | 1656 | 44 | F0 | F0 | — | — | 24.8 | — |
| 7 | 979 | 236 | 112 | 183 | 180 | 1843 | 8492 | 63 | F5 | F5 & F6 | 41.3 & 1.3 | 143.8 & 12.6 | 156.5 | High |
| 8 | 113 | 24 | 61 | 20 | 57 | 32 | 871 | 36 | F4 | F4 | 0.5 | 1.4 | 14.9 | Low |
| 9 | 294 | 748 | 6 | 212 | 1348 | 242 | 2286 | 41 | F3 | F4 | 1.2 | 4.4 | 46.0 | Low |
| 10 | 163 | 106 | 9 | 298 | 1517 | 213 | 1303 | 58 | F3 | F3 | 0.5 | 8.6 | 31.8 | High |
| 11 | 151 | 8 | 8 | 151 | 10 | 86 | 1538 | 48 | F0 | F0 | — | — | 25.3 | — |
| 12 | 678 | 368 | 163 | 92 | 108 | 216 | 2211 | 52 | F6 | F6 | 0.5 | 5.8 | 43.5 | High |
| 13 | 893 | 724 | 1 | 6 | 18 | 350 | 2207 | 55 | F1 | F1 | 0.8 | 5.5 | 22.8 | High |
| 14 | 195 | 660 | 22 | 127 | 79 | 607 | 3674 | 50 | F4 | F4 | 40 | 100.9 | 102 | High |
| 15 | 440 | 522 | 183 | 31 | 62 | 428 | 1232 | 48 | F6 | F6 | 1.3 | 12.0 | 33.0 | High |
| 16 | 15 | 8 | 0 | 9 | 5 | 168 | 1549 | 53 | F0 | F0 | — | — | 24.3 | — |
| 17 | 1176 | 3426 | 0 | 1178 | 2931 | 299 | 3400 | 51 | F2 | F1 & F2 | 39.8 & 1.3 | 70.7 & 18.6 | 89.3 | High |
| 18 | 441 | 678 | 0 | 73 | 62 | 302 | 492 | 47 | F1 | F1 | 0.7 | 3.5 | 13.9 | Low |
| 19 | 358 | 260 | 5 | 66 | 55 | 4288 | 11492 | 38 | F3 | F3 | 37.8 | 187.5 | 192.1 | High |
| 20 | 1498 | 395 | 92 | 323 | 395 | 487 | 3176 | 42 | F6 | F5 & F6 | 0.4 & 1.2 | 2.8 & 17.1 | 68.8 | Low/ high |

Table 6: Comparison of different fault detecting diagnostic approaches with respect to fault type.

| Fault type | Total faulty cases | Fuzzy Duval-EWR method [22] | | Fuzzy IEC-EWR method [20] | | Proposed fuzzy key gas-TFE method | |
|---|---|---|---|---|---|---|---|
| | | Correct diagnosis | % accuracy | Correct diagnosis | % accuracy | Correct diagnosis | % accuracy |
| Partial discharges | 7 | 7 | 100 | 7 | 100 | 7 | 100 |
| Discharges of low energy | 11 | 10 | 91.9 | 10 | 91.9 | 9 | 81.8 |
| Discharges of high energy | 22 | 21 | 95.9 | 21 | 95.9 | 20 | 90.9 |
| Low-level thermal faults | 13 | 12 | 92.3 | 13 | 100 | 13 | 100 |
| Medium-level thermal faults | 19 | 16 | 84.2 | 16 | 84.2 | 15 | 78.9 |
| High-level thermal faults | 12 | 10 | 83.3 | 10 | 83.3 | 9 | 75 |

Table 7: Comparison of severity accuracies of fault diagnosis models.

| Method | Fuzzy Duval-EWR method [22] | Fuzzy IEC-EWR method [20] | Proposed fuzzy key gas-TFE method |
|---|---|---|---|
| Total fault cases tested | 87 | 87 | 87 |
| No. of correct diagnosis of faulty cases | 79 | 78 | 75 |
| Fault detecting % accuracy | 90.8 | 89.7 | 86.2 |
| Fault severity % accuracy | 88 | 90.7 | 94.7 |

## 5. Conclusions

Early detection of power transformers internal faulting is vital and effective in minimizing asset damages, economic loss, and effects on reliability of the overall power system. From the nature and concentration of the evolved gas, the fault type can be determined. In this paper, a fuzzy-DGA-based diagnostic tool was developed to detect faults and condition of the transformer, whilst energy of fault of involved fault gases was used in fault severity determination. The seven keys gases paired according to their cross-correlation in signifying the nature of faults were used as inputs to the developed fuzzy logic model. For severity determination, enthalpy energy of change of reaction of fault gases was established upon the eicosane ($C_{20}H_{42}$) as the starting decomposition material. Simulation results shows that the model managed to correctly detect the faults encountered by the different transformers. In addition, energy involved during fault proved to be an effective method in determining fault severity as it can reflect the extent of insulation damage. Since asset managers' primary business is to enable reliable performance of its assets, such that in the event of faults, it is recommended that fusion of fault type and fault energy can be an effective method of classifying maintainable faulty transformers.

## Data Availability

The dissolved gas analysis (DGA) data used to support the findings of this study are included within the article (Table 5).

## Conflicts of Interest

The authors declare that they have no conflicts of interest.

## Acknowledgments

This research was supported by the Pan African University Institute for Basic Sciences, Technology and Innovation in the form of a postgraduate student research funding.

## References

[1] S. S. M. Ghoneim and I. B. M. Taha, "A new approach of DGA interpretation technique for transformer fault diagnosis," *International Journal of Electrical Power and Energy Systems*, vol. 81, pp. 265–274, 2016.

[2] IEEE Std. C57.104-2008 (Revision of IEEE Std. C57.104-1991), *IEEE Guide for the Interpretation of Gases Generated in Oil-Immersed Transformers*, IEEE, Piscataway, NJ, USA, 2009.

[3] T. Kari, W. Gao, D. Zhao et al., "An integrated method of ANFIS and Dempster-Shafer theory for fault diagnosis of power transformer," *IEEE Transactions on Dielectrics and Electrical Insulation*, vol. 25, no. 1, pp. 360–371, 2018.

[4] M. Arshad, S. Islam, and A. Khaliq, "Fuzzy logic approach in power transformers management and decision making," *IEEE Transactions on Dielectrics and Electrical Insulation*, vol. 21, no. 5, pp. 2343–2354, 2014.

[5] O. E. Gouda, S. M. Saleh, and S. H. El-hoshy, "Power transformer incipient faults diagnosis based on dissolved gas analysis," *Indonesian Journal of Electrical Engineering and Computer Science*, vol. 1, no. 1, pp. 10–16, 2016.

[6] G. K. Irungu, A. O. Akumu, and J. L. Munda, "Application of fuzzy logic and evidential reasoning methodologies in transformer insulation stress assessment," *IEEE Transactions on Dielectrics and Electrical Insulation*, vol. 23, no. 3, pp. 1444–1452, 2016.

[7] N. A. Bakar and A. Abu-Siada, "Fuzzy logic approach for transformer remnant life prediction and asset management decision," *IEEE Transactions on Dielectrics and Electrical Insulation*, vol. 23, no. 5, pp. 3199–3208, 2016.

[8] N. Bakar, A. Abu-Siada, and S. Islam, "A review of dissolved gas analysis measurement and interpretation techniques," *IEEE Electrical Insulation Magazine*, vol. 30, no. 3, pp. 39–49, 2014.

[9] M. Duval and L. Lamarre, "The duval pentagon-a new complimentary tool for the interpretation of dissolved gas analysis in transformers," *IEEE Electrical Insulation Magazine*, vol. 30, no. 6, pp. 9–12, 2014.

[10] M. Duval, "Use of pentagons and triangles for the interpretation of DGA in electrical equipment," in *Proceedings of TechCon North America Conference*, Albuquerque, NM, Mexico, February 2016.

[11] M. Duval, "State of the art of technical diagnosis through interpretation of DGA," in *Proceedings of My Transfo Conference*, Torino, Italy, May 2012.

[12] M. M. Ibrahim, M. M. Sayed, and E. E. Abu El-Zahab, "Diagnosis of power transformer incipient faults using Fuzzy Logic-IEC Based Approach," in *Proceedings of 2014 IEEE International Energy Conference(ENERGYCON)*, pp. 242–245, Dubrovnik, Croatia, May 2014.

[13] M. R. Ahmed, M. A. Geliel, and A. Khalil, "Power transformer fault diagnosis using fuzzy logic technique based on dissolved gas analysis," in *Proceedings of 21st Mediterranean Conference on Control and Automation (MED)*, pp. 584–589, Crete, Greece, June 2013.

[14] S. A. Khan, M. D. Equbal, and T. Islam, "A comprehensive comparative study of DGA based transformer fault diagnosis using fuzzy logic and ANFIS models," *IEEE Transactions on Dielectrics and Electrical Insulation*, vol. 22, no. 1, pp. 590–596, 2015.

[15] R. Hooshmand, M. Parastegari, and Z. Forghani, "Adaptive neuro-fuzzy inference system approach for simultaneous diagnosis of the type and location of faults in power transformers," *IEEE Electrical Insulation Magazine*, vol. 28, no. 5, pp. 32–42, 2012.

[16] S. A Khan, M. D. Equbal, and T. Islam, "ANFIS based identification and location of paper insulation faults of an oil immersed transformer," in *Proceedings 2014 6th IEEE Power India International Conference (PIICON 2014)*, pp. 1–6, Delhi, India, December 2014.

[17] I. B. M. Taha, S. S. M. Ghoneim, and H. G. Zaini, "A fuzzy diagnostic system for incipient transformer faults based on DGA of the insulating transformer oils," *International Review of Electrical Engineering (IREE)*, vol. 11, no. 3, pp. 305–313, 2016.

[18] F. Jakob, P. Noble, and J. J. Dukarm, "A thermodynamic approach to evaluation of the severity of transformer faults," *IEEE Transactions on Power Delivery*, vol. 27, no. 2, pp. 554–559, 2012.

[19] F. Jakob and J. J. Dukarm, "Thermodynamic estimation of transformer fault severity," *IEEE Transactions on Power Delivery*, vol. 30, no. 4, pp. 1941–1948, 2015.

[20] S. Sherif and M. Ghoneim, "Intelligent prediction of transformer faults and severities based on dissolved gas analysis integrated with thermodynamics theory," *IET Science, Measurements and Technology*, vol. 12, no. 3, pp. 388–394, 2018.

[21] G. K. Irungu, A. O. Akumu, and J. L. Munda, "Application of dissolved gas analysis in maintenance ranking of faulty oil-filled electrical equipment based on type and energy of the fault," in *Proceedings of 2017 IEEE Electrical Insulation Conference (EIC)*, pp. 274–277, Baltimore, MD, USA, June 2017.

[22] S. A. Wani, M. U. Farooque, S. A. Khan et al., "Fault severity determination in transformers using dissolved gas analysis (DGA)," in *Proceedings of 2015 Annual IEEE India Conference (INDICON)*, pp. 1–6, New Delhi, India, December 2015.

[23] P. Mathews, *Advanced Chemistry, Physical and Industrial*, Cambridge University Press, Foundation Books PVT. Ltd., New Delhi, India, 2006.

[24] IEC 60599, *IEC Guide to the Interpretation of Dissolved and Free Gases Analysis Mineral Oil-Impregnated Electrical Equipment in Service*, IEC, Geneva, Switzerland, 1999.

[25] F. O. Karry and C. W. De Silva, *Soft Computing and Intelligent Systems Design: Theory and Applications*, Pearson/Addison-Wesley, Boston, MA, USA, 2004.

[26] G. K. Irungu, A. O. Akumu, J. L. Munda, and B. Lubisi, "Application of key fault gases and oil testing for evaluation of transformer condition and its maintenance requirement," in *Proceedings of 23rd South African Universities Power Engineering. Conference*, pp. 502–507, Johannesburg, South Africa, January 2015.