Supplementary Information

Synthesis of Gold Nanoparticles to Capture Lifelike Proteins: Application on the Multichannel Sensor Array Design

Yumin Leng[*,1] Chunhua Ma,[2] Wentai Zhang,[2] Kecheng Liu,[3] and Zhiwen Lu[1]

[1]College of Physics and Electronic Engineering, Nanyang Normal University, Nanyang 473061, China

[2]College of Mechanical and Electronic Engineering, Nanyang Normal University, Nanyang 473061, China

[3]College of Chemistry and Pharmaceutical Engineering, Nanyang Normal University, Nanyang 473061, China

Corresponding email: lengyumin@nimte.ac.cn, yumin_leng@126.com

Supplementary Figures

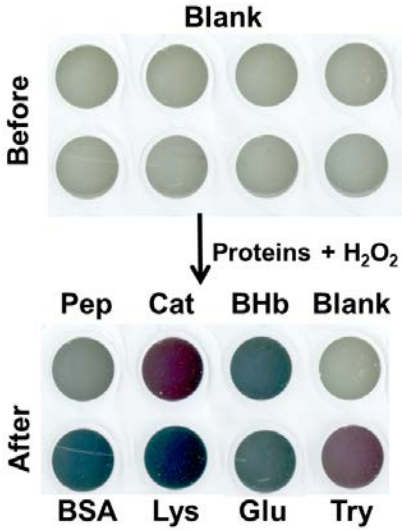

FIGURE S1: Color images of the Col-Au(I) solution obtained before and after exposure to proteins and H_2O_2. The randomly selected proteins (10 μg/mL) are pepsin (Pep), catalase (Cat), bovine hemoglobin (BHb), bovine serum albumin (BSA), lysozyme (Lys), glucoamylase (Glu) and trypsin (Try).

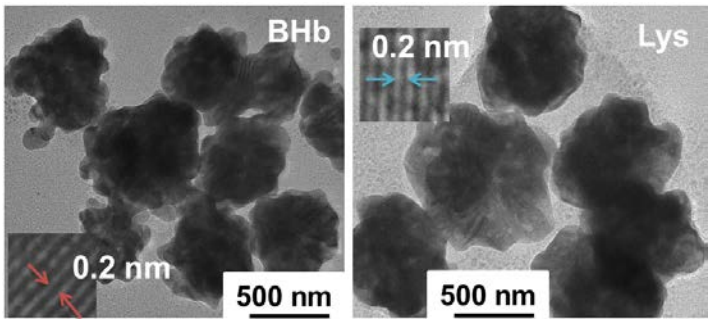

FIGURE S2: TEM and high resolution TEM (HRTEM) images of GNPs obtained by the rapid reduction of Au(I) to GNPs, which are overgilt on the protein structures (e.g. BHb and Lys interacted with Col).

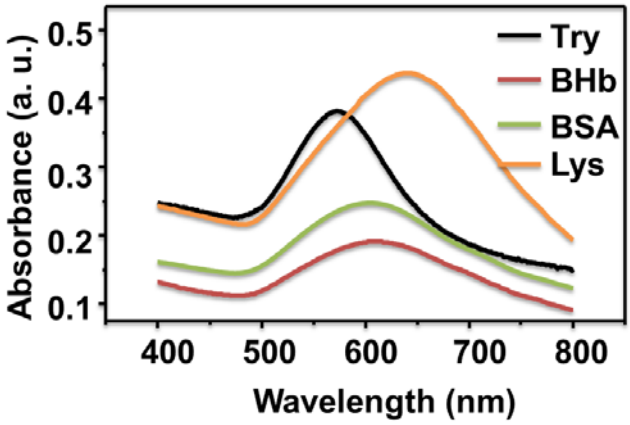

FIGURE S3: The UV-vis absorption spectra of GNPs obtained by the in-situ reduction of Au(I) to GNPs in the protein systems (the signed proteins interacted with Col).

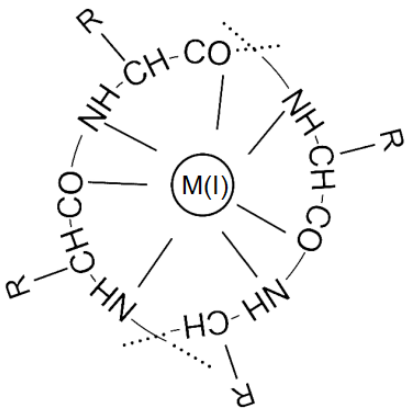

FIGURE S4: Schematic illustration of the interlocking rings directed by monovalent metal ions (M(I)) in Glu.

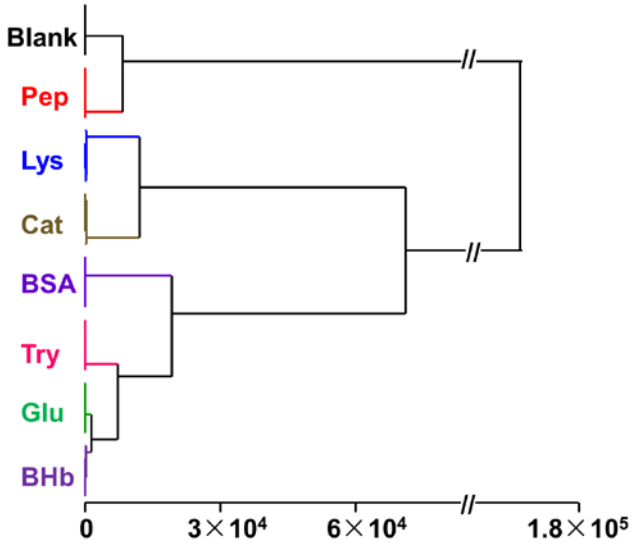

FIGURE S5: HCA analysis for the discrimination of proteins (10 μg/ml) based on the ΔRGB variations.

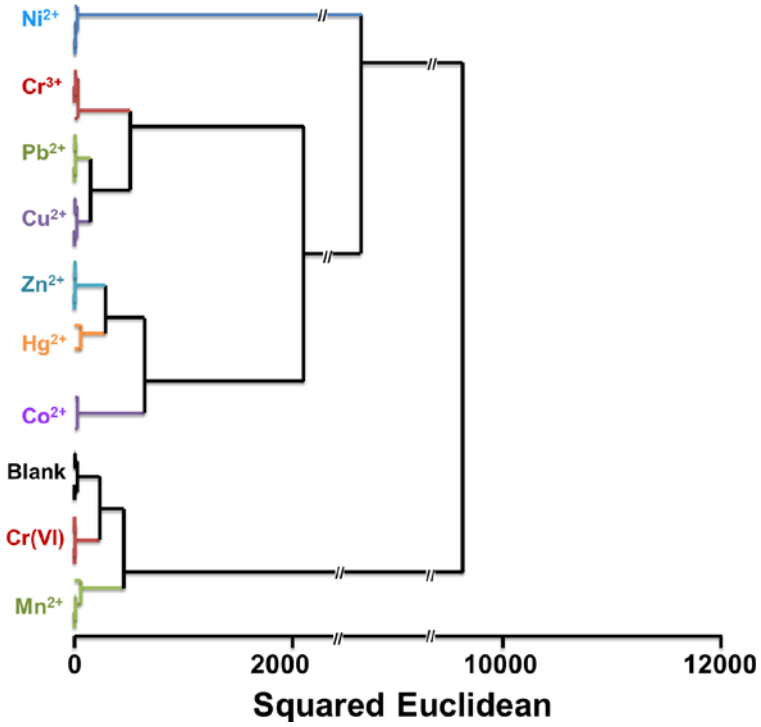

FIGURE S6: HCA analysis for the discrimination of heavy metal ions (0.77 μM) based on the ΔRGB variations.

Supplementary Tables

TABLE S1: Database of the ΔRGB alterations of the Col-Au(I) solution in the absence and presence of seven proteins (10 μg/ml) and H_2O_2.

	ΔR	ΔG	ΔB
Blank-1	-2.676	-1.238	2.271
Blank-2	-2.932	-1.680	0.634
Blank-3	-1.061	-0.195	2.486
Blank-4	-1.222	-0.481	1.579
Blank-5	-1.133	-0.947	0.572
BHb-1	106.903	77.568	54.307
BHb-2	108.563	78.478	56.817
BHb-3	111.316	78.732	55.141
BHb-4	111.241	78.974	55.654
BHb-5	118.508	82.099	58.648
Cat-1	88.710	165.214	99.803
Cat-2	96.386	167.844	106.002
Cat-3	98.821	167.079	112.614
Cat-4	97.375	164.521	111.126
Cat-5	97.080	168.771	117.860
Glu-1	87.164	67.589	53.196
Glu-2	92.365	69.209	54.085
Glu-3	92.879	70.297	55.669
Glu-4	91.154	68.216	53.542
Glu-5	89.197	68.451	54.450
Lys-1	166.889	169.506	105.078
Lys-2	165.062	167.885	114.669
Lys-3	163.419	165.581	118.686
Lys-4	163.672	166.420	122.910
Lys-5	163.818	168.008	133.510
BSA-1	158.139	90.399	61.297
BSA-2	156.307	91.255	63.359
BSA-3	155.620	92.440	64.812
BSA-4	157.895	93.377	65.697
BSA-5	157.614	94.995	67.864
Try-1	58.204	89.734	61.567
Try-2	59.500	93.031	61.719
Try-3	59.517	93.760	62.354
Try-4	59.481	94.484	62.687
Try-5	59.905	95.984	65.544
Pep-1	37.315	32.105	22.032
Pep-2	38.893	33.263	24.410
Pep-3	39.442	32.998	23.745
Pep-4	39.350	33.624	24.105
Pep-5	39.174	33.500	24.444

TABLE S2: Database of the ΔRGB alterations of the $[AuCl_4]^-$ and Glu mixture in the absence and presence of heavy metal ions (0.77 μM) after microwave reaction.

	ΔR	ΔG	ΔB
Blank-1	3.550	2.577	-1.249
Blank-2	1.602	-1.500	-5.215
Blank-3	3.845	-1.743	-3.699
Blank-4	4.842	1.884	-2.146
Mn^{2+}-1	-6.460	-6.571	3.242
Mn^{2+}-2	-7.660	-8.318	4.041
Mn^{2+}-3	-9.780	-11.553	-1.924
Mn^{2+}-4	-4.335	-4.648	6.009
Co^{2+}-1	-22.014	-27.528	-32.308
Co^{2+}-2	-22.404	-30.130	-33.425
Co^{2+}-3	-24.035	-32.138	-36.976
Co^{2+}-4	-23.752	-28.211	-37.278
Cu^{2+}-1	-0.032	-13.335	-17.306
Cu^{2+}-2	-0.741	-16.363	-18.991
Cu^{2+}-3	-2.003	-17.578	-20.929
Cu^{2+}-4	0.817	-14.518	-17.239
Cr^{3+}-1	-5.795	-23.377	-24.391
Cr^{3+}-2	-8.245	-27.450	-28.217
Cr^{3+}-3	-9.268	-28.880	-30.510
Cr^{3+}-4	-7.165	-25.566	-27.523
Ni^{2+}-1	-16.349	-45.095	-41.223
Ni^{2+}-2	-17.569	-49.746	-40.525
Ni^{2+}-3	-17.432	-50.053	-46.581
Ni^{2+}-4	-15.685	-47.878	-43.056
Hg^{2+}-1	-26.202	-12.817	-22.513
Hg^{2+}-2	-25.910	-13.880	-22.151
Hg^{2+}-3	-29.032	-18.297	-28.503
Hg^{2+}-4	-25.500	-12.586	-21.207
Cr(VI)-1	-0.624	-6.802	-8.326
Cr(VI)-2	-0.350	-8.345	-9.577
Cr(VI)-3	-0.114	-7.042	-8.288
Cr(VI)-4	-1.040	-8.543	-10.729
Zn^{2+}-1	-19.138	-24.748	-22.741
Zn^{2+}-2	-20.670	-23.321	-24.414
Zn^{2+}-3	-20.355	-22.885	-21.490
Zn^{2+}-4	-18.718	-25.786	-23.763
Pb^{2+}-1	-9.264	-16.225	-17.456
Pb^{2+}-2	-8.198	-17.013	-16.078
Pb^{2+}-3	-10.121	-18.651	-18.382
Pb^{2+}-4	-7.107	-19.552	-18.985