Hindawi Publishing Corporation
Mathematical Problems in Engineering
Volume 2014, Article ID 390742, 5 pages
http://dx.doi.org/10.1155/2014/390742

Research Article

Construction of New Exact Solutions for the (3 + 1)-Dimensional Burgers System

Zitian Li

College of Mathematics and Information Science, Qujing Normal University, Qujing, Yunnan 655011, China

Correspondence should be addressed to Zitian Li; lizitian88@163.com

Received 9 July 2014; Accepted 6 October 2014; Published 12 October 2014

Academic Editor: Miguel A. F. Sanjuan

By means of a variable separation method and a generalized direct ansätz function approach, new exact solutions including cross kink-wave solutions, doubly periodic kinky-wave solutions, and breather type of two-solitary wave solutions for the (3 + 1)-dimensional Burgers system are obtained. Moreover, the mechanical features are also investigated.

1. Introduction

Searching for explicit solutions of nonlinear evolution equations by using various different methods is useful and meaningful in physical science and nonlinear science. Many powerful methods have been presented, such as inverse scattering transform [1], Hirota's bilinear form method [2], two-soliton method [3], homoclinic test technique [4], Bäcklund transformation method [5], and three-wave type of ansätz approach [6]. And much work has been focused on the various extensions and application of the known algebraic methods to construct the solutions of nonlinear evolution equations [7, 8].

In this letter, we will present exact solutions of the (3 + 1)-dimensional Burgers system [9]:

$$\begin{aligned} u_t &= 2uu_y + 2vu_x + 2wu_z + u_{xx} + u_{yy} + u_{zz}, \\ u_x &= v_y, \\ u_z &= w_y, \end{aligned} \tag{1}$$

which was derived from the inverse transformation of heat-conduction equation, where $u(x, y, z, t)$, $v(x, y, z, t)$, $w(x, y, z, t)$ are three physical field function and $u : R_x \times R_y \times R_z \times R_t^+ \to R$. Recently, (1) was widely researched [10–12]. When $z = x$, $w = u$, (1) degenerated into the (2 + 1)-dimensional Burgers equation and the soliton-like solutions were obtained by using the extended Riccati equation mapping method [13], and many other results were found in the literature [14, 15]. In our work, we will give some new exact solutions for (1) by using the variable separation hypothesis and the direct ansätz function method all together.

2. Exact Solutions to the (3 + 1)-Dimensional Burgers System

We firstly suppose the solution of system (1) has the following ansätz:

$$\begin{gathered} u = u_0 + (\ln \phi)_y, \qquad v = v_0 + (\ln \phi)_x, \\ w = w_0 + (\ln \phi)_z, \end{gathered} \tag{2}$$

where u_0, v_0, and w_0 are real constants and $\phi = \phi(x, y, z, t)$ has the following variable separation form:

$$\phi(x, y, z, t) = a_0 + a_1 f(y, t) + a_2 g(x, z), \tag{3}$$

with a_i $(i = 0, 1, 2)$ constants and $f(y, t), g(x, z)$ are unknown function about $\{y, t\}$ and $\{x, z\}$, respectively. Substituting (2) and (3) into (1), we have

$$\begin{aligned} &a_0 \left(f_{yt} - 2u_0 f_{yy} - f_{yyy}\right) \\ &\quad + a_1 \left[f \left(f_{yt} - 2u_0 f_{yy} - f_{yyy}\right)\right. \\ &\qquad \left. - f_y \left(f_t - 2u_0 f_y - f_{yy}\right)\right] = 0, \end{aligned} \tag{4}$$

$$f_y\left(g_{xx}+g_{zz}\right)+2f_y\left(v_0g_x+w_0g_z\right)+g\left(f_{yt}-2u_0f_{yy}-f_{yyy}\right)=0. \tag{5}$$

Now let us consider (5), since $g(x,z)$ is only a function about variables x and z, letting

$$\frac{f_{yt}-2u_0f_{yy}-f_{yyy}}{f_y}=C\,(\text{constant}), \tag{6}$$

and by using the wave transformation $\xi = ax+bz+\xi_0$, (5) can be changed into

$$g''(\xi)+\frac{2\left(av_0+bw_0\right)}{a^2+b^2}g'(\xi)+\frac{C}{a^2+b^2}g(\xi)=0, \tag{7}$$

where a, b, and ξ_0 are arbitrary constants. And when a_0 and C are taken as $a_0=0, C\neq 0$ or $a_0\neq 0, C=0$, we find that (4) is automatically satisfied.

When $av_0+bw_0=0$, solutions of (7) are well known as follows:

$$\begin{aligned}
&\text{(i) } g(x,z)=c_1\cos\left[\sqrt{\frac{\tau}{a^2+b^2}}\left(ax+bz+\xi_0\right)\right]\\
&\qquad+c_2\sin\left[\sqrt{\frac{\tau}{a^2+b^2}}\left(ax+bz+\xi_0\right)\right],\quad C>0,\\
&\text{(ii) } g(x,z)=c_1\left(ax+bz+\xi_0\right)+c_2,\qquad C=0,\\
&\text{(iii) } g(x,z)=c_1\cosh\left[\sqrt{-\frac{\tau}{a^2+b^2}}\left(ax+bz+\xi_0\right)\right]\\
&\qquad+c_2\sinh\left[\sqrt{-\frac{\tau}{a^2+b^2}}\left(ax+bz+\xi_0\right)\right],\\
&\qquad C<0,
\end{aligned} \tag{8}$$

where c_1, c_2 are arbitrary constants.

Therefore, we only need to solve (6) from which we can obtain the solutions of system (1).

Example 1. Let the test function be

$$f(y,t)=b_1e^{ky+lt}+b_0+b_2e^{-(ky+lt)}, \tag{9}$$

where k, l, b_0, b_1, and b_2 are constants to be determined.

By introducing means of computer algebra (i.e., Maple), we obtain

$$\begin{aligned}
u_1 &= u_0+\Big(\Big(2ka_1\sqrt{b_1b_2}\sinh\left(ky+2ku_0t+r\right)\Big)\\
&\quad\times\Big(a_1b_0+2a_1\sqrt{b_1b_2}\cosh\left(ky+2ku_0t+r\right)\\
&\quad+a_2\left[c_1\cosh B\left(ax+bz+\xi_0\right)\right.\\
&\quad\left.+c_2\sinh B\left(ax+bz+\xi_0\right)\right]\Big)^{-1}\Big),\\
v_1 &= v_0+\Big(\left(aa_2B\left[c_1\sinh B\left(ax+bz+\xi_0\right)\right.\right.\\
&\quad\left.\left.+c_2\cosh B\left(ax+bz+\xi_0\right)\right]\right)\\
&\quad\times\Big(a_1b_0+2a_1\sqrt{b_1b_2}\cosh\left(ky+2ku_0t+r\right)\\
&\quad+a_2\left[c_1\cosh B\left(ax+bz+\xi_0\right)\right.\\
&\quad\left.+c_2\sinh B\left(ax+bz+\xi_0\right)\right]\Big)^{-1}\Big),\\
w_1 &= w_0+\Big(\left(ba_2B\left[c_1\sinh B\left(ax+bz+\xi_0\right)\right.\right.\\
&\quad\left.\left.+c_2\cosh B\left(ax+bz+\xi_0\right)\right]\right)\\
&\quad\times\Big(a_1b_0+2a_1\sqrt{b_1b_2}\cosh\left(ky+2ku_0t+r\right)\\
&\quad+a_2\left[c_1\cosh B\left(ax+bz+\xi_0\right)\right.\\
&\quad\left.+c_2\sinh B\left(ax+bz+\xi_0\right)\right]\Big)^{-1}\Big),
\end{aligned} \tag{10}$$

which is a cross kink-wave solution, where $r=\ln\sqrt{|b_1/b_2|}$, $B=\sqrt{k^2/(a^2+b^2)}$ (see Figure 1: F_1).

Example 2. Similarly, if $f(y,t)$ was taken as

$$f(y,t)=\left(h_1e^{ky+lt}+h_0+h_2e^{-(ky+lt)}\right)^2, \tag{11}$$

where k, l, h_0, h_1, and h_2 are constants to be determined later, then, we derived a periodic soliton solution and a multiple-soliton solution as follows:

$$\begin{aligned}
u_2 &= u_0+\Big(2a_1h_1k\left[h_1e^{ky+(2ku_0+3k^2)t}+h_0\right]e^{ky+(2ku_0+3k^2)t}\\
&\quad\times\Big(a_1\left[h_1e^{ky+(2ku_0+3k^2)t}+h_0\right]^2\\
&\quad+a_2\left(c_1\cos\left[A\left(ax+bz+\xi_0\right)\right]\right.\\
&\quad\left.+c_2\sin\left[A\left(ax+bz+\xi_0\right)\right]\right)\Big)^{-1}\Big),
\end{aligned}$$

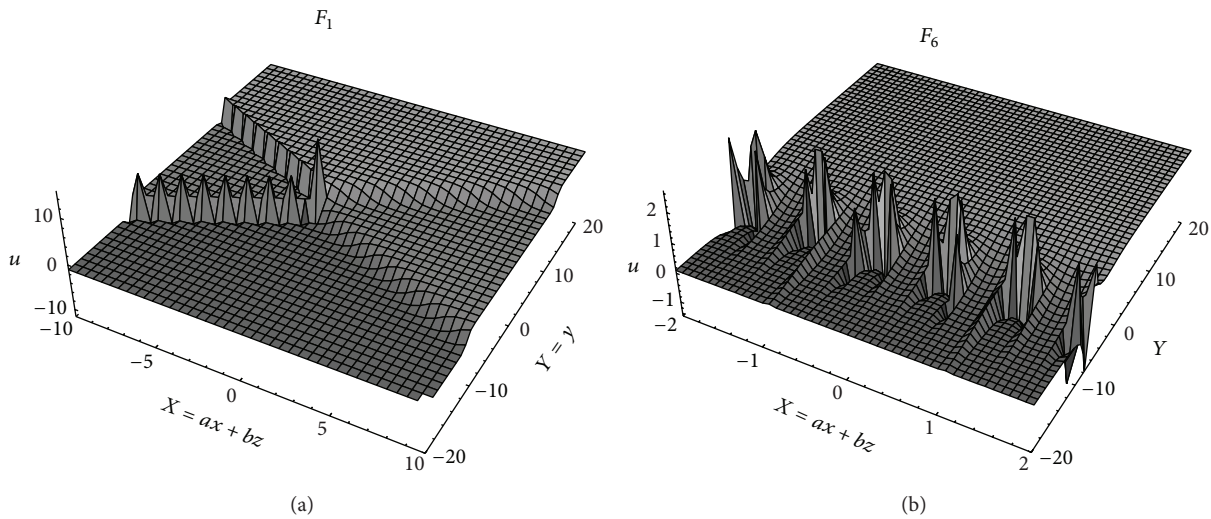

FIGURE 1: F_1: mechanical feature of u_1: ($a_1 = a_2 = 1, b_1 = b_2 = 1, k = u_0 = 1, c_1 = c_2 = B = 1, t = 0.$), F_6: mechanical feature of u_2: ($a_1 = a_2 = 1, h_0 = h_1 = 1, c_1 = c_2 = 1, u_0 = A = 1, k = 0.1, t = 1$).

$$
\begin{aligned}
v_2 = {} & v_0 \\
& + \Bigg(Aaa_2 \left[-c_1 \sin \left[A \left(ax + bz + \xi_0 \right) \right] \right. \\
& \qquad \left. + c_2 \cos \left[A \left(ax + bz + \xi_0 \right) \right] \right] \\
& \times \Bigg(a_1 \left[h_1 e^{ky + (2ku_0 + 3k^2)t} + h_0 \right]^2 \\
& \quad + a_2 \left(c_1 \cos \left[A \left(ax + bz + \xi_0 \right) \right] \right. \\
& \qquad \left. + c_2 \sin \left[A \left(ax + bz + \xi_0 \right) \right] \right) \Bigg)^{-1} \Bigg), \\
w_2 = {} & w_0 \\
& + \Bigg(Aba_2 \left[-c_1 \sin \left[A \left(ax + bz + \xi_0 \right) \right] \right. \\
& \qquad \left. + c_2 \cos \left[A \left(ax + bz + \xi_0 \right) \right] \right] \\
& \times \Bigg(a_1 \left[h_1 e^{ky + (2ku_0 + 3k^2)t} + h_0 \right]^2 \\
& \quad + a_2 \Bigg(c_1 \cos \left[A \left(ax + bz + \xi_0 \right) \right] \\
& \qquad + c_2 \sin \left[A \left(ax + bz + \xi_0 \right) \right] \Bigg) \Bigg)^{-1} \Bigg), \\
u_3 = {} & u_0 \\
& + \Bigg(4kh_1 h_2 \sinh 2 \left[\left(ky + 2ku_0 t \right) + \ln \frac{h_1}{h_2} \right] \\
& \times \Bigg(4a_1 h_1 h_2 \cosh^2 \left[\left(ky + 2ku_0 t \right) + \ln \frac{h_1}{h_2} \right] \\
& \quad + a_2 \left(c_1 \cosh \left[B \left(ax + bz + \xi_0 \right) \right] \right. \\
& \qquad \left. + c_2 \sinh \left[B \left(ax + bz + \xi_0 \right) \right] \right) \Bigg)^{-1} \Bigg), \\
v_3 = {} & v_0 \\
& + \Bigg(Baa_2 \left(c_1 \sinh \left[B \left(ax + bz + \xi_0 \right) \right] \right. \\
& \qquad \left. + c_2 \cosh \left[B \left(ax + bz + \xi_0 \right) \right] \right) \\
& \times \Bigg(4a_1 h_1 h_2 \cosh^2 \left[\left(ky + 2ku_0 t \right) + \ln \frac{h_1}{h_2} \right] \\
& \quad + a_2 \left(c_1 \cosh \left[B \left(ax + bz + \xi_0 \right) \right] \right. \\
& \qquad \left. + c_2 \sinh \left[B \left(ax + bz + \xi_0 \right) \right] \right) \Bigg)^{-1} \Bigg), \\
w_3 = {} & w_0 \\
& + \Bigg(Bba_2 \left(c_1 \sinh \left[B \left(ax + bz + \xi_0 \right) \right] \right. \\
& \qquad \left. + c_2 \cosh \left[B \left(ax + bz + \xi_0 \right) \right] \right) \\
& \times \Bigg(4a_1 h_1 h_2 \cosh^2 \left[\left(ky + 2ku_0 t \right) + \ln \frac{h_1}{h_2} \right] \\
& \quad + a_2 \left(c_1 \cosh \left[B \left(ax + bz + \xi_0 \right) \right] \right. \\
& \qquad \left. + c_2 \sinh \left[B \left(ax + bz + \xi_0 \right) \right] \right) \Bigg)^{-1} \Bigg),
\end{aligned}
\tag{12}
$$

where $A = \sqrt{2k^2/(a^2 + b^2)}$ and $B = \sqrt{4k^2/(a^2 + b^2)}$ (see Figure 1: F_6, Figure 2: F_7).

Example 3. Furthermore, when choosing $f(y, t)$ to be

$$
f(y, t) = L \cos \left[k_1 y + l_1 t \right] + e^{k_2 x + l_2 t} + H_0, \tag{13}
$$

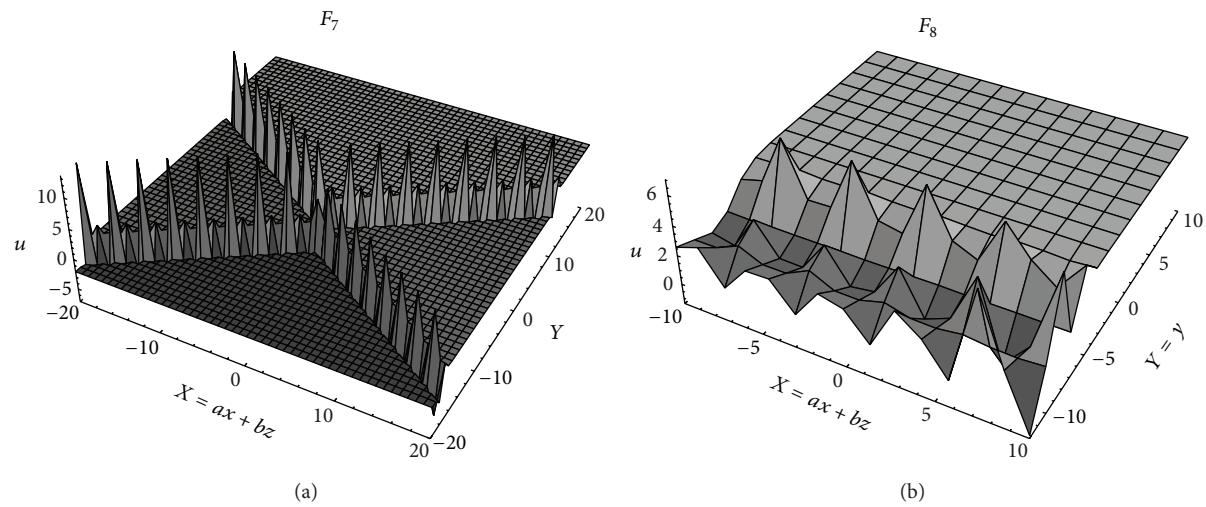

Figure 2: F_7: mechanical feature of u_3: ($a_0 = 1, a_2 = 2, u_0 = 1, c_1 = 2, c_2 = 1, B = 2, k = 1.5, t = 2.$), F_8: mechanical feature of u_4: ($k_1 = a_1 = c_2 = 1, a_2 = k_2 = h_1 = c_1 = H_0 = u_0 = r = 2, B = L = 3, t = 1$).

with L, H_0, k_1, k_2, l_1, and l_2 constants, we obtained a breather type of two-solitary wave solution as follows:

$$\begin{aligned}
u_4 = u_0 &\\
&+ \Big(\big(a_1 k_2 \left[\sinh(\xi_1) + \cosh(\xi_1) \right] - a_1 k_1 L \sin(\xi_2) \big) \\
&\quad \times \big(a_1 H_0 + a_1 \left[\cosh(\xi_1) + \sinh(\xi_1) \right] + a_1 L \cos(\xi_2) \\
&\qquad + a_2 \left[c_1 \cos(\xi_3) + c_2 \sin(\xi_3) \right] \big)^{-1} \Big), \\
v_4 = v_0 &\\
&- \Big(a_2 a B \left[c_1 \sin\left[B(ax + bz + \xi_0) \right] \right. \\
&\qquad \left. - c_2 \cos\left[B(ax + bz + \xi_0) \right] \right] \\
&\quad \times \big(a_1 H_0 + a_1 \left[\cosh(\xi_1) + \sinh(\xi_1) \right] + a_1 L \cos(\xi_2) \\
&\qquad + a_2 \left[c_1 \cos(\xi_3) + c_2 \sin(\xi_3) \right] \big)^{-1} \Big), \\
w_4 = w_0 &\\
&- \Big(a_2 b B \left[c_1 \sin\left[B(ax + bz + \xi_0) \right] \right. \\
&\qquad \left. - c_2 \cos\left[B(ax + bz + \xi_0) \right] \right] \\
&\quad \times \big(a_1 H_0 + a_1 \left[\cosh(\xi_1) + \sinh(\xi_1) \right] + a_1 L \cos(\xi_2) \\
&\qquad + a_2 \left[c_1 \cos(\xi_3) + c_2 \sin(\xi_3) \right] \big)^{-1} \Big),
\end{aligned} \tag{14}$$

where $\xi_1 = k_2 y + (k_1^2 + k_2^2 + 2k_2 u_0)t$, $\xi_2 = k_1 y + 2k_1 u_0 t$, $\xi_3 = B(ax + bz + \xi_0)$.

The solution represented by (14) is breather type of two-solitary wave solution which contains a periodic wave and two solitary waves, whose amplitude periodically oscillates with the evolution of time (see Figure 2: F_8).

3. Conclusion

In this paper, by using the variable separation method and the generalized direct ansätz method the (3 + 1)-dimensional Burgers system is investigated. New exact solutions including cross kink-wave solution, doubly kinky-wave solution, and breather type of two-solitary wave solutions are obtained; these solutions enrich the structures of solutions of the (3 + 1)-dimensional Burgers system. Moreover, the mechanical features are also investigated.

Conflict of Interests

The author declares that there is no conflict of interests regarding the publication of this paper.

Acknowledgment

This work is supported by Natural Science Foundation of Yunnan Province under Grant no. 2013FZ113.

References

[1] M. J. Ablowitz and P. A. Clarkson, *Solitons, Nonlinear Evolution Equations and Inverse Scattering Transform*, Cambridge University Press, Cambridge, UK, 1991.

[2] M. Jimbo and T. Miwa, "Solitons and infinite dimensional Lie algebras," *Publications of the Research Institute for Mathematical Sciences*, vol. 19, no. 3, pp. 943–1001, 1983.

[3] Z. Dai, Z. Li, Z. Liu, and D. Li, "Exact cross kink-wave solutions and resonance for the Jimbo-Miwa equation," *Physica A*, vol. 384, no. 2, pp. 285–290, 2007.

[4] Z. Dai, Z. Li, Z. Liu, and D. Li, "Exact homoclinic wave and soliton solutions for the 2D Ginzburg-Landau equation," *Physics Letters A*, vol. 372, no. 17, pp. 3010–3014, 2008.

[5] R. Beals, M. Rabelo, and K. Tenenblat, "Bäcklund transformations and inverse scattering solutions for some pseudospherical

surface equations," *Studies in Applied Mathematics*, vol. 81, no. 2, pp. 125–151, 1989.

[6] Z. Li and Z. Dai, "Exact periodic cross-kink wave solutions and breather type of two-solitary wave solutions for the (3 + 1)-dimensional potential-YTSF equation," *Computers & Mathematics with Applications*, vol. 61, no. 8, pp. 1939–1945, 2011.

[7] Z. Li, "New exact homoclinic wave and periodic wave solutions for the Ginzburg-Landau equation," *Applied Mathematics and Computation*, vol. 217, no. 4, pp. 1549–1554, 2010.

[8] Z. Li and X. Zhang, "New exact kink solutions and periodic form solutions for a generalized Zakharov-Kuznetsov equation with variable coefficients," *Communications in Nonlinear Science and Numerical Simulation*, vol. 15, no. 11, pp. 3418–3422, 2010.

[9] J.-P. Ying and S.-Y. Lou, "Multilinear variable separation approach in (3+1)-dimensions: the Burgers equation," *Chinese Physics Letters*, vol. 20, no. 9, pp. 1448–1451, 2003.

[10] L. Huang, J. A. Sun, F. Q. Dou, W. Duan, and X. X. Liu, "New variable separation solutions, localized structures and fractals of the (3+1)-dimensional nonlinear Burgers system," *Acta Physica Sinica*, vol. 56, no. 2, pp. 611–619, 2007.

[11] S. H. Ma, X. H. Wu, J. P. Fang, and C. L. Zheng, "New exact solutions and special soliton structures of the (3 + 1)-dimensional Burgers system," *Acta Physica Sinica*, vol. 57, no. 1, pp. 11–17, 2008.

[12] A.-M. Wazwaz, "Multiple soliton solutions and multiple singular soliton solutions for the (3+1)-dimensional Burgers equations," *Applied Mathematics and Computation*, vol. 204, no. 2, pp. 942–948, 2008.

[13] F. Kong and S. Chen, "New exact soliton-like solutions and special soliton-like structures of the (2+1) dimensional Burgers equation," *Chaos, Solitons and Fractals*, vol. 27, no. 2, pp. 495–500, 2006.

[14] A.-M. Wazwaz, "Multiple kink solutions and multiple singular kink solutions for the (2 + 1)-dimensional Burgers equations," *Applied Mathematics and Computation*, vol. 204, no. 2, pp. 817–823, 2008.

[15] D.-S. Wang, H.-B. Li, and J. Wang, "The novel solutions of auxiliary equation and their application to the (2 + 1)-dimensional Burgers equations," *Chaos, Solitons & Fractals*, vol. 38, no. 2, pp. 374–382, 2008.