Hindawi Publishing Corporation
Mathematical Problems in Engineering
Volume 2015, Article ID 616137, 7 pages
http://dx.doi.org/10.1155/2015/616137

Research Article

Secure Communication Based on a Hyperchaotic System with Disturbances

Bo Wang and Xiucheng Dong

School of Electrical and Information Engineering, Xihua University, Chengdu 610096, China

Correspondence should be addressed to Bo Wang; bowang4321@gmail.com

Received 27 June 2014; Accepted 1 September 2014

Academic Editor: Jun Cheng

This paper studies the problem on chaotic secure communication, and a new hyperchaotic system is included for the scheme design. Based on Lyapunov method and H_∞ techniques, two kinds of chaotic secure communication schemes in the case that system disturbances exist are presented for the possible application in real engineering; corresponding theoretical derivations are also provided. In the end, some typical numerical simulations are carried out to demonstrate the effectiveness of the proposed schemes.

1. Introduction

Since the pioneer work of Fujisaka and Yamada in 1983 [1] and Pecora and Carroll in 1990 [2], chaos science has become an active research field with a wide range of applications including secure communication. The idea of the chaotic secure communication is that in transmitting terminal the chaotic signal is used as a carrier with hidden information, which will be restored in receiving terminal based on chaos synchronization. Generally chaos synchronization can be classified into four categories: (i) identical or complete synchronization, (ii) generalized synchronization, (iii) phase synchronization, and (iv) lag synchronization; see, for instance, [3] and the references therein. During last decades, many researches on secure communication have been carried out [4–10]. For instance, in [4], a reduced-order observer and a step-by-step sliding mode observer are given to realize the secure communication in the case that the observer's matching condition cannot be satisfied. In [5], the modified generalized projective synchronization for the fractional-order chaotic systems is introduced, and the unpredictability of the scaling factors in projective synchronization is included to enhance the security of communication. In [6], a constrained regularized least square state estimator is designed for deterministic discrete-time nonlinear dynamical systems, being subject to a set of equality or inequality constraints, to design the secure communication scheme. In [7], based on the synchronization of the hyperchaotic Chen system and the unified chaotic system, the encrypting and decrypting of digital images are carried out to realize the secure communication. However, these investigations usually do not consider the case that system disturbances exist, and that limits their practical value because, in real engineering, system disturbances exist widely and will have some effects on system performance. In addition, featuring the chaotic attractor with more than one positive Lyapunov exponent and the complicated dynamical behavior, the hyperchaotic system, especially the new hyperchaotic system, can be used to improve the safety of secure communication. In this paper a hyperchaotic system [11] will be included for the secure communication scheme design.

Hence, inspired by the above discussion, we try to propose the secure communication schemes based on a hyperchaotic system. The rest of the paper is organized as follows. In Section 2, the model description and preliminaries will be given. In Section 3, a secure communication scheme will be constructed by using the single-dimensional H_∞ controller. Then we will extend the theoretical results on the base of the multidimensional H_∞ controller. Finally in Section 4, we will include some typical examples to demonstrate the correctness of the proposed schemes.

Notations used in this paper are fairly standard. Let R^n be the n-dimensional Euclidean space; $R^{n\times m}$ denotes the set of

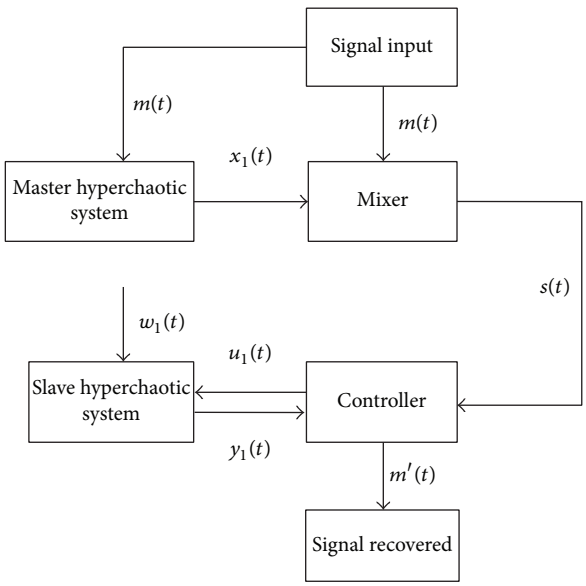

Figure 1: Chaotic secure communication Scheme 1.

$n \times m$ real matrix, $*$ indicates the symmetric part in a matrix, I stands for the identity matrix with appropriate dimensions, and diag$\{\cdots\}$ denotes the diagonal matrix.

2. System Description and Preliminaries

First, based on the single-dimensional H_∞ controller, we present chaotic secure communication Scheme 1, which is made of the master system, the slave system, the mixer, the controller, and the channel; see Figure 1.

Thereinto, the master hyperchaotic system in transmitting terminal is designed by

$$\begin{aligned}
\dot{x}_1(t) &= r_1\left(x_2(t) - x_1(t) - g\left(x_1(t)\right)\right) + p \cdot m(t), \\
\dot{x}_2(t) &= x_1(t) - x_2(t) + x_3(t), \\
\dot{x}_3(t) &= -r_2\left[x_2(t) - x_4(t)\right], \\
\dot{x}_4(t) &= -r_3\left[x_3(t) + x_5(t)\right], \\
\dot{x}_5(t) &= r_4\left[x_4(t) - r_5 x_5(t)\right], \\
g\left(x_1(t)\right) &= b x_1(t) + \frac{(a-b)\left[\left|x_1(t)+1\right| - \left|x_1(t)-1\right|\right]}{2},
\end{aligned} \tag{1}$$

where x_i, $i = 1, 2, \ldots, 5$, is the system state variable and $r_i > 0$, $i = 1, 2, \ldots, 5$, is the system parameter. The chaotic system can produce the hyperchaotic dynamic behavior when $a = -1.27$, $b = -0.68$, $r_1 = 10$, $r_2 = 14$, $r_3 = 0.2$, $r_4 = 20$, $r_5 = 0.03$, $m(t)$ is the signal input, and p is a positive scalar.

The chaotic encrypted signal to be transmitted is defined by

$$s(t) = L \cdot x_1(t) + p \cdot m(t), \tag{2}$$

where L is the control parameter.

The slave hyperchaotic system in receiving terminal is designed by

$$\begin{aligned}
\dot{y}_1(t) &= r_1\left(y_2(t) - y_1(t) - g\left(y_1(t)\right)\right) + u_1(t) + w(t), \\
\dot{y}_2(t) &= y_1(t) - y_2(t) + y_3(t), \\
\dot{y}_3(t) &= -r_2\left[y_2(t) - y_4(t)\right], \\
\dot{y}_4(t) &= -r_3\left[y_3(t) + y_5(t)\right], \\
\dot{y}_5(t) &= r_4\left[y_4(t) - r_5 y_5(t)\right], \\
u_1(t) &= s(t) - L \cdot y_1(t), \\
g\left(y_1(t)\right) &= b y_1(t) + \frac{(a-b)\left[\left|y_1(t)+1\right| - \left|y_1(t)-1\right|\right]}{2},
\end{aligned} \tag{3}$$

where $u_1(t)$ is the signal input of the single-dimensional H_∞ controller, $w_1(t)$ is the disturbance input, and $s(t)$ is the receiving signal.

Define the tracking error variable as

$$E(t) = Y(t) - X(t), \tag{4}$$

where

$$\begin{aligned}
E(t) &= \left(e_1(t), e_2(t), e_3(t), e_4(t), e_5(t)\right)^T, \\
X(t) &= \left(x_1(t), x_2(t), x_3(t), x_4(t), x_5(t)\right)^T, \\
Y(t) &= \left(y_1(t), y_2(t), y_3(t), y_4(t), y_5(t)\right)^T.
\end{aligned} \tag{5}$$

We get the following error dynamical model:

$$\begin{aligned}
\dot{e}_1(t) &= r_1\left(e_2(t) - e_1(t) - M(t)\, e_1(t)\right) - L \cdot e_1(t) + w(t), \\
\dot{e}_2(t) &= e_1(t) - e_2(t) + e_3(t), \\
\dot{e}_3(t) &= -r_2\left[e_2(t) - e_4(t)\right], \\
\dot{e}_4(t) &= -r_3\left[e_3(t) + e_5(t)\right], \\
\dot{e}_5(t) &= r_4\left[e_4(t) - r_5 e_5(t)\right], \\
h(t) &= c e_1(t) + d w_1(t),
\end{aligned} \tag{6}$$

where $a \le M(t) = g(y_1(t)) - g(x_1(t)) \le b$, c is a positive scalar, and d is a positive scalar.

The recovered signal is define by

$$m'(t) = \frac{s(t) - L \cdot y_1(t)}{p}. \tag{7}$$

Now, to present the main objective of this paper more precisely, we introduce the following lemma and definition, which are essential for the later development.

Lemma 1 (See [12]). *Given any real vectors D and E with appropriate dimensions and any positive scalar k, the following inequality holds:*

$$DE + E^T D^T \le k D D^T + \frac{1}{k} E^T E. \tag{8}$$

Definition 2. Under the assumption of zero initial condition, the slave system (3) can synchronize with the master system (6) with an H_∞ norm bound γ if $\|h(t)\|_2 \le \gamma\|w(t)\|_2$ for any nonzero $w(t) \in L_2[t_0, \infty]$.

3. Main Results

In this section, based on Lyapunov method and LMI technology, the following theoretical results can be concluded.

Theorem 3. *For Scheme 1, if there exist scalars $\varepsilon > 0$ and $n > 1$, such that*

$$L = r_1(\varepsilon - 1 - a + n), \tag{9}$$

$$\begin{bmatrix} -\varepsilon + c^2 & 0 & 0 & cd + \dfrac{1}{2r_1} \\ * & -1+n & 0 & 0 \\ * & * & -r_5 & 0 \\ * & * & * & -\gamma^2 + d^2 \end{bmatrix} < 0, \tag{10}$$

the input signal in transmitting terminal can be recovered in receiving terminal with the required H_∞ performance index γ.

Proof. Choose the following Lyapunov functional candidate:

$$\begin{aligned} V(t) = {} & \frac{1}{2r_1}e_1^2(t) + \frac{1}{2}e_2^2(t) + \frac{1}{2r_2}e_3^2(t) \\ & + \frac{1}{2r_3}e_4^2(t) + \frac{1}{2r_4}e_5^2(t). \end{aligned} \tag{11}$$

The time derivative of $V(t)$ along trajectories of the error model (6) is given by

$$\begin{aligned} \dot V(t) = {} & \frac{1}{r_1}e_1(t)\dot e_1(t) + e_2(t)\dot e_2(t) \\ & + \frac{1}{r_2}e_3(t)\dot e_3(t) + \frac{1}{r_3}e_4(t)\dot e_4(t) + \frac{1}{r_4}e_5(t)\dot e_5(t) \\ = {} & e_1(t)\Big[e_2(t) - e_1(t) - M(t)e_1(t) \\ & \quad - \frac{L}{r_1}e_1(t) + \frac{1}{r_1}w_1(t)\Big] \\ & + e_2(t)[e_1(t) - e_2(t) + e_3(t)] \\ & - e_3(t)[e_2(t) - e_4(t)] \\ & - e_4(t)[e_3(t) + e_5(t)] \\ & + e_5(t)[e_4(t) - r_5e_5(t)] \\ = {} & -e_1^2(t)\left[1 + M(t) + \frac{L}{r_1}\right] - e_2^2(t) \\ & + 2e_1(t)e_2(t) - r_5e_5^2(t) + \frac{1}{r_1}w(t)e_1(t) \\ \le {} & -e_1^2(t)\left[1 + M(t) + \frac{L}{r_1} - n\right] \\ & - \left(1 - \frac{1}{n}\right)e_2^2(t) - r_5e_5^2(t) + \frac{1}{r_1}w(t)e_1(t). \end{aligned} \tag{12}$$

Consider control law (9); we have

$$\dot V(t) \le -\widehat E^T(t)\widehat K\widehat E(t) + \frac{1}{r_1}w_1(t)e_1(t), \tag{13}$$

where

$$\widehat K = \operatorname{diag}\left\{\varepsilon, 1 - \frac{1}{n}, r_5\right\}. \tag{14}$$

Consider the H_∞ performance index as follows:

$$\begin{aligned} J = {} & \int_{t_0}^{t_T}\left[h^2(t) - \gamma^2 w_1^T(t)w_1(t)\right]dt \\ = {} & \int_{t_0}^{t_T}\left[h^2(t) - \gamma^2 w_1^T(t)w_1(t) + \dot V(t)\right]dt + V(t_0) - V(t_T). \end{aligned} \tag{15}$$

For $V(t_0) = 0$ and $V(t_T) \ge 0$, we have

$$\begin{aligned} J \le {} & \int_{t_0}^{t_T}\left[h^2(t) - \gamma^2 w_1^T(t)w_1(t) + \dot V(t)\right]dt \\ = {} & \int_{t_0}^{t_T}\Big[h^2(t) - \gamma^2 w_1^T(t)w_1(t) \\ & \quad - \widehat E^T(t)\widehat K\widehat E(t) + \frac{1}{r_1}e_1(t)w_1(t)\Big]dt \\ = {} & \int_{t_0}^{t_T}\eta^T(t)\Omega\eta(t)\,dt, \end{aligned} \tag{16}$$

where

$$\begin{gathered} \eta(t) = \left[\widehat E^T(t), w_1^T(t)\right]^T, \\ \Omega = \begin{bmatrix} -\varepsilon + c^2 & 0 & 0 & cd + \dfrac{1}{2r_1} \\ * & -1+n & 0 & 0 \\ * & * & -r_5 & 0 \\ * & * & * & -\gamma^2 + d^2 \end{bmatrix}. \end{gathered} \tag{17}$$

Consider LMI (10); we have $J \le 0$ for any nonzero $w_1(t) \in L_2[t_0, \infty]$. The proof of Theorem 3 is thus completed. □

4. Further Result

Next, based on the multidimensional H_∞ controller, we present chaotic secure communication Scheme 2; see Figure 2.

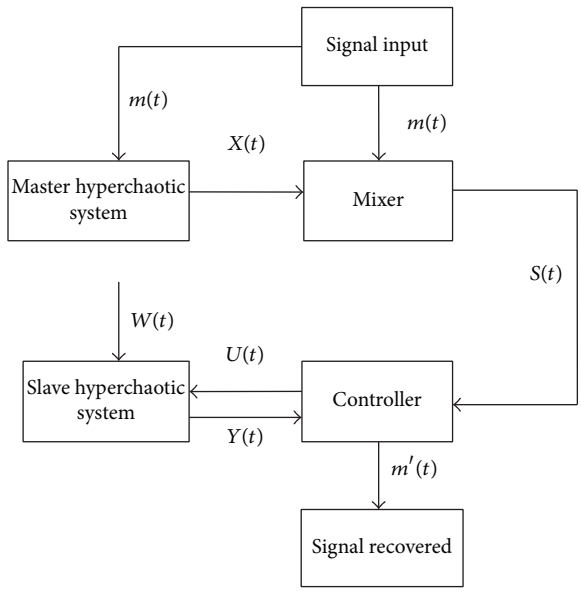

FIGURE 2: Chaotic secure communication Scheme 2.

The master hyperchaotic system is constructed as

$$\begin{aligned}
\dot{x}_1(t) &= r_1\left(x_2(t) - x_1(t) - g\left(x_1(t)\right)\right) + p \cdot m(t),\\
\dot{x}_2(t) &= x_1(t) - x_2(t) + x_3(t),\\
\dot{x}_3(t) &= -r_2\left[x_2(t) - x_4(t)\right],\\
\dot{x}_4(t) &= -r_3\left[x_3(t) + x_5(t)\right],\\
\dot{x}_5(t) &= r_4\left[x_4(t) - r_5 x_5(t)\right],\\
g\left(x_1(t)\right) &= b x_1(t) + \frac{(a-b)\left[\left|x_1(t)+1\right| - \left|x_1(t)-1\right|\right]}{2}.
\end{aligned} \tag{18}$$

The signals to be transmitted in channels are designed by

$$\begin{aligned}
s_1(t) &= L_1 \cdot x_1(t) + p \cdot m(t),\\
s_j(t) &= L_j \cdot x_j(t), \quad j = 2, \ldots, 5,
\end{aligned} \tag{19}$$

where L_i, $i = 1, \ldots, 5$, are the control parameters.

The slave system is constructed as follows:

$$\begin{aligned}
\dot{y}_1(t) &= r_1\left(y_2(t) - y_1(t) - g\left(y_1(t)\right)\right) + u_1(t) + w_1(t),\\
\dot{y}_2(t) &= y_1(t) - y_2(t) + y_3(t) + u_2(t) + w_2(t),\\
\dot{y}_3(t) &= -r_2\left[y_2(t) - y_4(t)\right] + u_3(t) + w_3(t),\\
\dot{y}_4(t) &= -r_3\left[y_3(t) + y_5(t)\right] + u_4(t) + w_4(t),\\
\dot{y}_5(t) &= r_5\left[y_4(t) - r_4 y_5(t)\right] + u_5(t) + w_5(t),\\
u_i(t) &= s_i(t) - L_i \cdot y_i(t), \quad i = 1, \ldots, 5,\\
g\left(y_1(t)\right) &= b y_1(t) + \frac{(a-b)\left[\left|y_1(t)+1\right| - \left|y_1(t)-1\right|\right]}{2},
\end{aligned} \tag{20}$$

where $W(t) = (w_1(t), w_2(t), w_3(t), w_4(t), w_5(t))^T$ is the disturbance input vector of slave system and $U(t) = (u_1(t), u_2(t), u_3(t), u_4(t), u_5(t))^T$ is the multidimensional controller.

Define the tracking error vector as

$$E(t) = Y(t) - X(t). \tag{21}$$

We get the error dynamical model as

$$\begin{aligned}
\dot{e}_1(t) &= r_1\left(e_2(t) - e_1(t) - M(t)\, e_1(t)\right) - L_1 \cdot e_1(t) + w_1(t),\\
\dot{e}_2(t) &= e_1(t) - e_2(t) + e_3(t) - L_2 \cdot e_2(t) + w_2(t),\\
\dot{e}_3(t) &= -r_2\left[e_2(t) - e_4(t)\right] - L_3 \cdot e_3(t) + w_3(t),\\
\dot{e}_4(t) &= -r_3\left[e_3(t) + e_5(t)\right] - L_4 \cdot e_4(t) + w_4(t),\\
\dot{e}_5(t) &= r_5\left[e_4(t) - r_4 e_5(t)\right] - L_5 \cdot e_5(t) + w_5(t),\\
h(t) &= C^T E(t) + D^T W(t).
\end{aligned} \tag{22}$$

The recovered signal is defined by

$$m'(t) = \frac{s_1(t) - L_1 \cdot y_1(t)}{p}. \tag{23}$$

Based on Lyapunov method and LMI technique, the following theoretical result can be concluded.

Theorem 4. *For chaotic secure communication Scheme 2, if there exist positive scalars $K_i > 0$, $i = 1, \ldots, 5$, such that*

$$\begin{aligned}
L_1 &= K_1 - r_1(1+a) + 4,\\
L_2 &= K_2 + \frac{(r_1+1)^2}{16} + 3,\\
L_3 &= K_3 + \frac{(1-r_2)^2}{16} + 4,\\
L_4 &= K_4 + \frac{(r_2-r_3)^2}{16} + 4,\\
L_5 &= K_5 + \frac{(r_5-r_3)^2}{16} - r_4 r_5,
\end{aligned} \tag{24}$$

$$\begin{bmatrix} CC^T - K & DC^T + I \\ * & DD^T - \gamma^2 \end{bmatrix} < 0, \tag{25}$$

the signal input in transmitting terminal can be recovered in receiving terminal with the required H_∞ performance index γ.

Proof. First choose the following Lyapunov function:

$$V(t) = \frac{1}{2}\left(e_1^2(t) + e_2^2(t) + e_3^2(t) + e_4^2(t) + e_5^2(t)\right). \tag{26}$$

The time derivative of $V(t)$ along trajectories of error model (22) is

$$\begin{aligned}
\dot{V}(t) &= e_1(t)\dot{e}_1(t) + e_2(t)\dot{e}_2(t) \\
&\quad + e_3(t)\dot{e}_3(t) + e_4(t)\dot{e}_4(t) + e_5(t)\dot{e}_5(t) \\
&= e_1(t)\left[r_1\left(e_2(t) - e_1(t) - Me_1(t)\right)\right. \\
&\qquad \left. - L_1e_1(t) + w_1(t)\right] \\
&\quad + e_2(t)\left[e_1(t) - e_2(t) + e_3(t) - L_2e_2(t) + w_2(t)\right] \\
&\quad + e_3(t)\left[-r_2\left(e_2(t) - e_4(t)\right) - L_3e_3(t) + w_3(t)\right] \\
&\quad + e_4(t)\left[-r_3\left(e_3(t) + e_5(t)\right) - L_4e_4(t) + w_4(t)\right] \\
&\quad + e_5(t)\left[r_5\left(e_4(t) - r_4e_5(t)\right) - L_5e_5(t) + w_5(t)\right] \\
&= -\left[r_1(1+M) + L_1\right]e_1^2(t) \\
&\quad + \left(r_1+1\right)e_1(t)e_2(t) - \left(1+L_2\right)e_2^2(t) \\
&\quad + \left(1-r_2\right)e_2(t)e_3(t) - L_3e_3^2(t) \\
&\quad + \left(r_2-r_3\right)e_3(t)e_4(t) - L_4e_4^2(t) \\
&\quad + \left(r_5-r_3\right)e_4(t)e_5(t) \\
&\quad - \left(L_5 + r_4r_5\right)e_5^2(t) + W^T(t)E(t) \\
&\le -\left[r_1(1+M) - 4 + L_1\right]e_1^2(t) \\
&\quad - \left[2e_1(t) - \frac{\left(r_1+1\right)e_2(t)}{4}\right]^2 \\
&\quad - \left[-\frac{\left(r_1+1\right)^2}{16} - 3 + L_2\right]e_2^2(t) \\
&\quad - \left[2e_2(t) - \frac{\left(1-r_2\right)e_3(t)}{4}\right]^2 \\
&\quad - \left[-\frac{\left(1-r_2\right)^2}{16} - 4 + L_3\right]e_3^2(t) \\
&\quad - \left[2e_3(t) - \frac{\left(r_2-r_3\right)e_4(t)}{4}\right]^2 \\
&\quad - \left[-\frac{\left(r_2-r_3\right)^2}{16} - 4 + L_4\right]e_4^2(t) \\
&\quad - \left[2e_4(t) - \frac{\left(r_5-r_3\right)e_5(t)}{4}\right]^2 \\
&\quad - \left[-\frac{\left(r_5-r_3\right)^2}{16} + r_4r_5 + L_5\right]e_5^2(t) + W^T(t)BE(t).
\end{aligned} \tag{27}$$

With condition (24), we have

$$\dot{V}(t) = -E^T(t)KE(t) + W^T(t)BE(t). \tag{28}$$

Consider H_∞ performance index as follows:

$$\begin{aligned}
J &= \int_{t_0}^{t_T}\left[H^T(t)H(t) - \gamma^2W^T(t)W(t)\right]dt \\
&= \int_{t_0}^{t_T}\left[H^T(t)H(t) - \gamma^2W^T(t)W(t) + \dot{V}(t)\right]dt \\
&\quad + V\left(t_0\right) - V\left(t_T\right).
\end{aligned} \tag{29}$$

Because $V(t_0) = 0$ and $V(t_T) \ge 0$, one can obtain

$$\begin{aligned}
J &\le \int_{t_0}^{t_T}\left[H^T(t)H(t) - \gamma^2W^T(t)W(t) + \dot{V}(t)\right]dt \\
&= \int_{t_0}^{t_T}\left[H^T(t)H(t) - \gamma^2W^T(t)W(t)\right. \\
&\qquad \left. -E^T(t)KE(t) + W^T(t)E(t)\right]dt \\
&= \int_{t_0}^{t_T}\eta^T(t)\Omega\eta(t)\,dt,
\end{aligned} \tag{30}$$

where

$$\begin{aligned}
\eta(t) &= \left[E^T(t), W^T(t)\right]^T, \\
\Omega &= \begin{bmatrix} CC^T - K & DC^T + I \\ * & DD^T - \gamma^2 \end{bmatrix}.
\end{aligned} \tag{31}$$

With LMI (25), we have $J \le 0$ for any nonzero $W(t) \in L_2[t_0, \infty]$. According to Definition 2, the proof of Theorem 4 can be completed. □

5. Example and Simulation

In this section, we include some examples to validate the effectiveness of two proposed secure communication schemes. The numerical simulation is with the step size of 0.001 second and the following initial parameters:

$$\begin{aligned}
x_0 &= [0.7557, 0.0957, -0.2801, 0.0164, 0.1498]^T \\
y_0 &= [1.1306, -0.0411, -0.1034, -0.0354, -0.4042]^T \\
\gamma &= 0.3, \qquad c = 0.9, \qquad d = 0.1, \\
C &= [0.8, 0.1, 0.15, 0, 0.05], \\
D &= [0.1, 0, 0, 0, 0] \\
w_i(t) &= \begin{cases} 0.2\sin(2t)\cos\left(e^t\right), & t \ge 20\text{ s} \\ 0, & \text{else.} \end{cases}
\end{aligned} \tag{32}$$

$m(t)$ denotes the digital binary signal that is switching between 0 and 1 randomly. First, we consider secure communication Scheme 1. Based on Theorem 3, we get $L = 12.6096$.

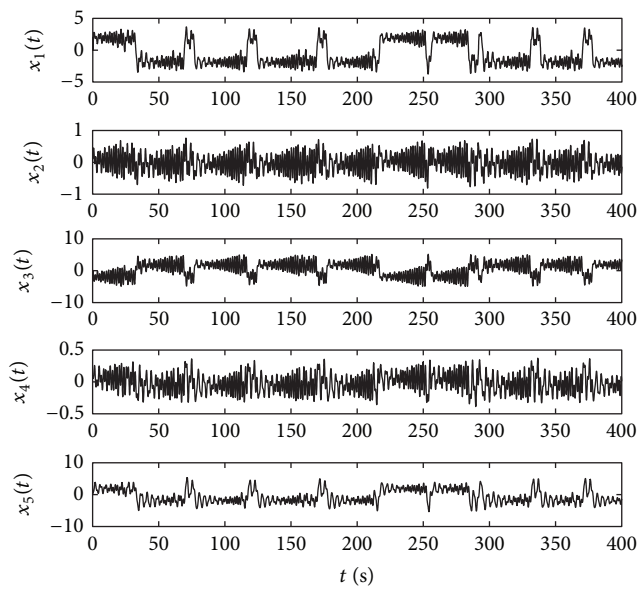

Figure 3: Time response of the state variable of the hyperchaotic system.

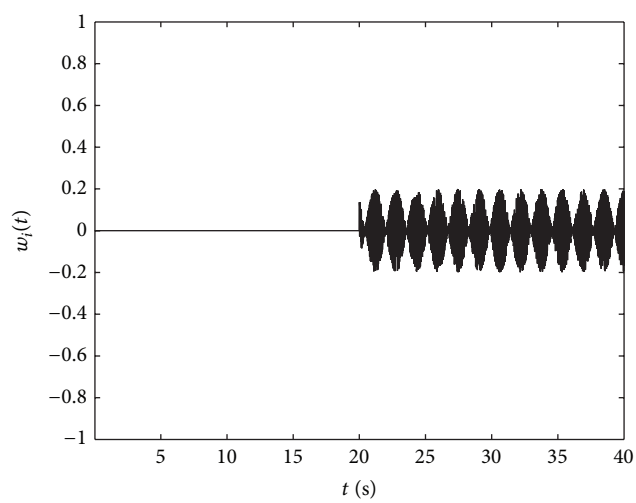

Figure 4: Time response of the disturbance input.

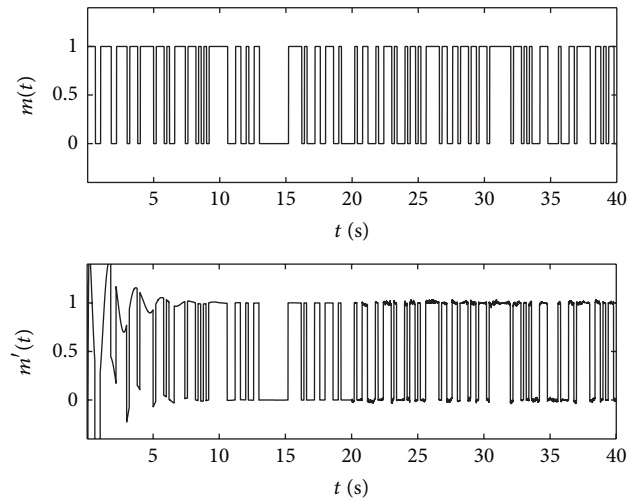

Figure 5: Time response of input signal and recovered signal based on Scheme 1.

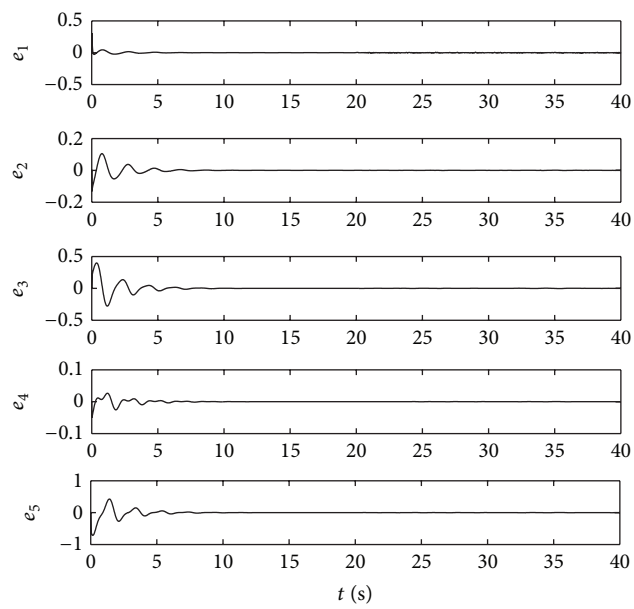

Figure 6: Time response of the synchronization error variable based on Scheme 1.

The numerical simulation results are shown in Figures 3, 4, 5, and 6.

Next, we consider secure communication Scheme 2. Based on Theorem 4, we get $K = [8.3279, 2.3744, 2.7687, 1.6072, 1.9823]$. The numerical simulation results are shown in Figures 7 and 8.

Remark 5. From numerical simulation, we notice that the input signal in transmitting terminal can be restored precisely in receiving terminal at early stage; later when disturbance is added at 20th second, the synchronization error jitters in a small range, which satisfies the required H_∞ control performance index, and there exists an error between the input signal and the recovered signal. In addition, it can be found that Scheme 2 has better synchronization performance at the cost of more complicated structure, such as the requirement for all system state information and the increase of transmission channels, which cause the generation of new disturbances w_i, $i = 2, \ldots, 5$, and will have an effect on the system control performance. Therefore, it can be concluded that both secure communication schemes are meaningful and are chosen according to the actual requirement in real engineering.

6. Conclusion

In this paper, a new hyperchaotic system is included for the secure communication scheme design in the case that disturbances exist. Based on Lyapunov method and H_∞ technology,

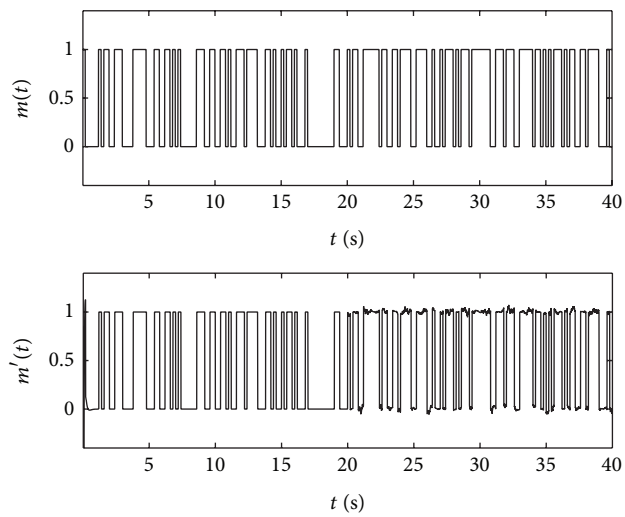

Figure 7: Time response of input signal and recovered signal based on Scheme 2.

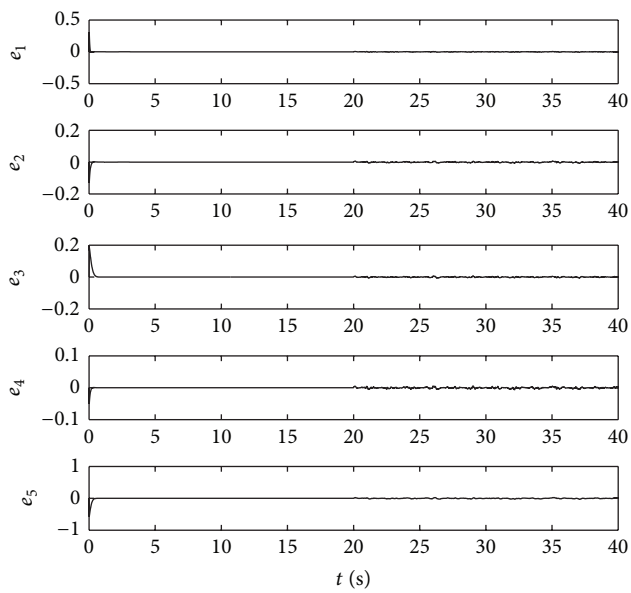

Figure 8: Time response of the synchronization error variable based on Scheme 2.

two secure communication schemes have been presented for the possible application in real engineering; some typical numerical simulations have been carried out to demonstrate the effectiveness of our schemes.

Conflict of Interests

The authors declare that there is no conflict of interests regarding the publication of this paper.

Acknowledgments

This work was partially supported by the Young Scholars Project of Xihua University (01201419), the Open Research Subject of Key Laboratory of Signal and Information Processing of Sichuan Province (szjj2014-018), the Open Research Fund of Key Laboratory of Fluid and Power Machinery of Ministry of Education (SZjj2011-006), and the National Natural Science Foundation of China (61174058, 61134001).

References

[1] H. Fujisaka and T. Yamada, "Stability theory of synchronized motion in coupled-oscillator systems," *Progress of Theoretical Physics*, vol. 69, no. 1, pp. 32–47, 1983.

[2] L. M. Pecora and T. L. Carroll, "Synchronization in chaotic systems," *Physical Review Letters*, vol. 64, no. 8, pp. 821–824, 1990.

[3] A. C. Luo, "A theory for synchronization of dynamical systems," *Communications in Nonlinear Science and Numerical Simulation*, vol. 14, no. 5, pp. 1901–1951, 2009.

[4] J. Q. Yang and F. L. Zhu, "Synchronization for chaotic systems and chaos-based secure communications via both reduced-order and step-by-step sliding mode observers," *Communications in Nonlinear Science and Numerical Simulation*, vol. 18, no. 4, pp. 926–937, 2013.

[5] X. Wu, H. Wang, and H. Lu, "Modified generalized projective synchronization of a new fractional-order hyperchaotic system and its application to secure communication," *Nonlinear Analysis: Real World Applications*, vol. 13, no. 3, pp. 1441–1450, 2012.

[6] M. F. Hassan, "Observer design for constrained nonlinear systems with application to secure communication," *Journal of the Franklin Institute*, vol. 351, no. 2, pp. 1001–1026, 2014.

[7] N. Smaoui, A. Karouma, and M. Zribi, "Secure communications based on the synchronization of the hyperchaotic Chen and the unified chaotic systems," *Communications in Nonlinear Science and Numerical Simulation*, vol. 16, no. 8, pp. 3279–3293, 2011.

[8] J. Cheng, H. Zhu, S. Zhong, Y. Zeng, and X. Dong, "Finite-time H_∞ control for a class of Markovian jump systems with mode-dependent time-varying delays via new Lyapunov functionals," *ISA Transactions*, vol. 52, no. 6, pp. 768–774, 2013.

[9] J. Cao, "Improved delay-dependent stability conditions for MIMO networked control systems with nonlinear perturbations," *The Scientific World Journal*, vol. 2014, Article ID 196927, 4 pages, 2014.

[10] J. Cheng, H. Zhu, Y. Ding, S. Zhong, and Q. Zhong, "Stochastic finite-time boundedness for Markovian jumping neural networks with time-varying delays," *Applied Mathematics and Computation*, vol. 242, pp. 281–295, 2014.

[11] L.-L. Hao, J. Liu, and R. Wang, "Analysis of a fifth-order hyperchaotic circuit," in *Proceedings of the IEEE International Workshop on VLSI Design & Video Technology (IWVDVT '05)*, pp. 28–30, Suzhou, China, May 2005.

[12] S. Boyd, L. El Ghaoui, E. Feron, and V. Balakrishnan, *Linear Matrix Inequalities in Systems and Control Theory*, SIAM, Philadelphia, Pa, USA, 1994.