Hindawi
Scientific Programming
Volume 2017, Article ID 3639524, 11 pages
https://doi.org/10.1155/2017/3639524

Research Article

Risk Analysis on Leakage Failure of Natural Gas Pipelines by Fuzzy Bayesian Network with a Bow-Tie Model

Xian Shan,[1] Kang Liu,[2] and Pei-Liang Sun[3]

[1] *School of Science, China University of Petroleum, Qingdao 266580, China*
[2] *College of Mechanical and Electronic Engineering, China University of Petroleum, Qingdao 266580, China*
[3] *School of Economics and Management, China University of Petroleum, Qingdao 266580, China*

Correspondence should be addressed to Xian Shan; shanxian@163.com

Received 7 October 2016; Accepted 16 November 2016; Published 21 February 2017

Academic Editor: Xiang Li

Pipeline is the major mode of natural gas transportation. Leakage of natural gas pipelines may cause explosions and fires, resulting in casualties, environmental damage, and material loss. Efficient risk analysis is of great significance for preventing and mitigating such potential accidents. The objective of this study is to present a practical risk assessment method based on Bow-tie model and Bayesian network for risk analysis of natural gas pipeline leakage. Firstly, identify the potential risk factors and consequences of the failure. Then construct the Bow-tie model, use the quantitative analysis of Bayesian network to find the weak links in the system, and make a prediction of the control measures to reduce the rate of the accident. In order to deal with the uncertainty existing in the determination of the probability of basic events, fuzzy logic method is used. Results of a case study show that the most likely causes of natural gas pipeline leakage occurrence are parties ignore signage, implicit signage, overload, and design defect of auxiliaries. Once the leakage occurs, it is most likely to result in fire and explosion. Corresponding measures taken on time will reduce the disaster degree of accidents to the least extent.

1. Introduction

Energy is the base of modern industry and the driving force of sustainable development for socioeconomic. In recent years, the energy consumption of natural gas increases rapidly, which results in significantly growth in natural gas industry, such as natural gas reserves, production, and trade volumes. Along with the maturity of the natural gas consuming market, pipeline transportation as a major mode of transport, is rapidly gaining momentum.

But due to the features of the long distance gas pipeline such as high energy and pressure, flammable, toxic, and hazardous characteristics, rupture accidents are likely to occur because of corrosion, material defects, operational errors, or other reasons [1]. In recent years, safety accidents of gas pipelines occur frequently, which caused great casualties and property losses. Systemic and thorough risk analysis may effectively prevent the occurrence of accidents and reduce the losses of accidents to an acceptable level.

At present, lots of qualitative and quantitative risk analysis methods are used for risk assessment of natural gas pipeline leakage, such as the probability and statistics method, analytic hierarchy process [2, 3], Petri nets [4], operability study (HAZOP), fault tree analysis (FTA), event tree analysis (ETA), Bow-tie model, and Bayesian network. These methods can be grossly divided into two groups.

(1) Research based on the probability and statistics method [5–7]: From statistical analysis of typical oil-gas pipeline accidents in the data base, the main factors result in natural gas pipeline leakage failure and accident consequences can be obtained. The leakage failure of natural gas pipelines may occur due to internal and external factors. External factors include corrosion and interference from the third party and natural disaster, while internal factors include material defect, weld-seam defect, and auxiliaries failure.

(2) Construct the risk evaluation framework based on the theory of safety system engineering. FTA, ETA, and Bow-tie model are three typical techniques of this kind.

The fault tree analysis method chooses accidents as the top event. The purpose is to find the direct and indirect causes of top events from top to bottom layers. Yuhua and Datao applied fault tree analysis for oil and gas pipeline leakage [8]. Lavasani et al. enhanced a fuzzy approach to calculate the fuzzy probabilities of the basic events in the fault tree of pipeline failure [9].

Event tree analysis is to consider all aspects of success and failure events according to the accident. Through the event tree analysis method, we can analyze the potential consequences of the accident that may occur in the complex system. Zamalieva et al. proposed a probabilistic model for online scenario labeling in dynamic event tree generation [10]. Brito and de Almeida constructed the event tree of natural gas pipelines [11].

But with only the fault tree and event tree analysis method, the whole process of the accident cannot be described intuitively. Bow-tie method is induced by combining the fault tree and event tree analysis method. With this method, the whole process of the incident is displayed, including causes of the accident, the accident occurrence, prevention, control, and consequences. The traditional Bow-tie analysis method only uses the diagram to describe the process of the accident and do some relevant qualitative analysis. Recent years more accurate quantitative analysis methods with Bow-tie model are studied by researchers. Shahriar et al. constructed a Bow-tie model to analyze oil and gas pipelines risk and employed fuzzy logic to derive fuzzy probabilities of basic events in FTA to estimate fuzzy probabilities of output event consequences [12].

However, fault tree analysis, event tree analysis, and Bow-tie model are methods based on the theory of cut sets, which only conduct the analysis of the two states of events, without reverse inference. Compared to the Bow-tie method, fault tree, and event tree method, Bayesian network carries out two-way analysis, not only to find the results from the causes, but also to find causes from the results. Khakzad et al. combined Bayesian network with fault tree analysis and Bow-tie model for risk analysis for safety analysis in process facilities and offshore drilling operations, respectively [13, 14]. Li et al. analyzed the leakage failure risk of submarine oil and gas pipelines by Bayesian network with Bow-tie model [15].

The purpose of this study is to develop an effective approach for the risk analysis of natural gas pipelines. A risk assessment method based on Bow-tie model and Bayesian network is proposed in this paper. The Bow-tie diagram of the natural gas pipeline leakage is constructed based on the potential risk factors and consequences of the failure. Bayesian networks converted from the Bow-tie model are conducted to analyze the risk of natural gas leakage. The probability of the failure and corresponding consequences are obtained through Bayesian inference as the weak links between the failure and the risk factors in the system. Pipelines are easily influenced by the external environment and internal factors. Differences even exists in pipelines located in the same area at different time, in terms of geological soil conditions, material property, running state, and corrosion protection measures. It indicates that factors which affect the running of natural gas pipelines are of great uncertainty and vagueness. In order to deal with this problem, a fuzzy logic method is proposed to determine the prior probability of basic events.

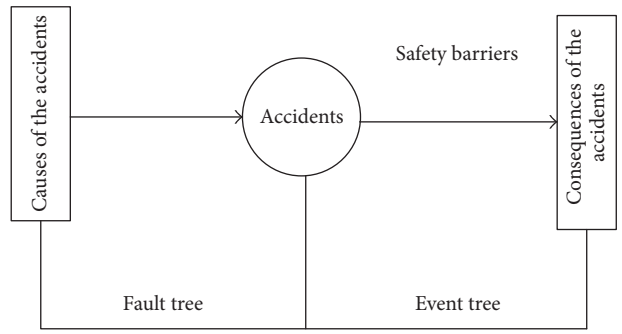

Figure 1: Bow-tie model structure model.

The paper is organized as follows. After the introduction, the basic concepts of Bow-tie model and Bayesian network are introduced in Section 2. The proposed framework of risk analysis based on Fuzzy Bayesian network with Bow-tie model is presented in Section 3. A practical case is studied by using the proposed method in Section 4. Finally, conclusions and future work are discussed in Section 5.

2. Risk Analysis Techniques

2.1. Bow-Tie Model. Bow-tie analysis was proposed by University of Queensland in Australia in 1979. Due to the characteristics of intuition, simplicity, and visibility, it has been widely used in the safety management areas. A Bow-tie model is a combination of a fault tree and an event tree. Accident hazard source, critical event, safety barriers, and the consequences of the failure are the chief components of a Bow-tie model. Accident hazard source refers to the risk factors of the failure. Critical event is the failure itself and safety barriers are measures taken to reduce the losses of the failure. The structure of the Bow-tie model is shown in Figure 1.

As seen from Figure 1, the construction of a Bow-tie model of an accident is a two-step process. The first step is fault tree analysis, which is the left part of the Bow-tie model. It is comprised of identifying the risk factors of the system to be evaluated and choosing the critical event that is most likely to occur as the top event. The second step is event tree analysis, which is the right part of the Bow-tie model. It starts from the critical event and follows with the possible consequences after a series of failure prevention and mitigation measures.

Bow-tie model takes advantages of the fault tree analysis and the event tree analysis. Not only can the cause of the accident be found, but also the consequences of the accident can be displayed, which is convenient for the following research on risk assessment.

2.2. Bayesian Network. Bayesian network, also known as Bayesian reliability network, is a probabilistic technique based on graph theory and probability theory. In a Bayesian network, each node represents an information element.

The directed edge between nodes indicates the degree of association between the information elements. Through a directed acyclic graph, the relationship and the influence extent between various elements of a network structure can be represented intuitively. In Bayesian networks, nodes without any incoming arrow are called root nodes, which have a priori probability distribution. Other nodes are called leaf nodes. Nodes the arrow points to are called the child nodes, and the source nodes of the arrow are called the parent nodes. Each child node has a conditional probability distribution (or function) in condition of the parent nodes.

P is conditional probability distribution. $B(A_i)$ and $A(A_i)$ are the parent node set and nondescendant node set of A_i, respectively. For nodes without an edge, they are independent. That is to say, under the given condition of $B(A_i)$, A_i and $A(A_i)$ are conditional independence. So

$$P\left(A_i \mid \left(B\left(A_i\right), A\left(A_i\right)\right)\right) = P\left(A_i \mid B\left(A_i\right)\right). \tag{1}$$

The conditional probability $P(A_i \mid B(A_i))$ expresses the connection between the node A_i and their parent nodes $B(A_i)$. Once the prior probability distribution of the root node and the conditional probability distribution of the nonroot nodes is given, joint probability distribution is

$$\begin{aligned} P(A) &= P\left(A_1, A_2, \ldots, A_n\right) \\ &= \prod_{i=1}^{n} P\left(A_i \mid B\left(A_1, A_2, \ldots, A_{i-1}\right)\right). \end{aligned} \tag{2}$$

According to the principle of the Bayesian network, forward prediction and backward diagnosis can be carried out as follows.

(1) Forward prediction is prediction of the probability of the failure and potential consequences based on the causes events' probability. The prior probability of the cause event A_i is $P(A_i)$, the probability of the consequence event R is $P(R)$, and the conditional probability of consequence event R in condition of the cause event A_i is $P(R \mid A_i)$. Then,

$$P(R) = \sum_{i=1}^{n} P\left(A_i\right) P\left(R \mid A_i\right). \tag{3}$$

(2) Backward diagnosis is to infer the causes events' probability from the already happened consequence events' probability. Then diagnose the cause of the event (accident, failure, and pathology) according to the probability. The prior probability of cause event A_i is $P(A_i)$, and the conditional probability of the cause event A_i in condition of the consequence event R is $P(A_i \mid R)$; then

$$P\left(A_i \mid R\right) = \frac{P\left(R \mid A_i\right) P\left(A_i\right)}{\sum_{i=1}^{n} P\left(R \mid A_i\right) P\left(A_i\right)}. \tag{4}$$

3. Framework of Risk Analysis Based on Fuzzy Bayesian Network with a Bow-Tie Model

3.1. Collect Necessary Information of the Risk. In order to deeply analyze the causes and consequences of the occurrences, it is of great importance to comprehensively understand the normal operation conditions, the failure consequences, and preventive measures by collecting the history data, consulting professionals, and reviewing literatures.

3.2. Analysis of the Cause Factors of the Failure and Construction of the Fault Tree. The cause factors can be studied in several ways, such as man-made factors and nonhuman factors, internal factors and external factors, or different types leading to the failure. Find the deep reasons layer by layer gradually until the bottom event. Then construct the fault tree, which chooses the failure as the top event, and build a relationship between the direct cause, the indirect cause, and the top event. Then qualitative and quantitative analyses are carried according to the fault tree.

3.3. Analysis of Consequences and Construction of the Event Tree. Event tree analysis method starts with the failure and develops with success or failure events caused by the accident and measures adopted in chronological order. Then qualitative and quantitative analysis of consequences in the system are carried out according to the event tree.

3.4. Construction of the Bow-Tie Model. The fault tree, a dendrogram with basic events, intermediate events, and top events connected by the logic gates and transfer symbols, is located on the left of the Bow-tie model. On the right side of the Bow-tie model is the event tree, which starts with a primary event and develops in accordance with the subsequent measures taken successfully or not until the final consequences. The Bow-tie method can be used in both qualitative analysis and quantitative calculation.

3.5. Convert the Bow-Tie Diagram into the Bayesian Network. According to the logic relationship and connection strength of events involved in the Bow-tie diagram, the mapping relation of the Bow-tie model and a Bayesian network is constructed. Bayesian network is composed of 1 directed acyclic graph and lots of corresponding conditional probability tables.

In the process of mapping from Bow-tie model to a Bayesian network, nodes in the Bayesian network correspond to events one by one in the Bow-tie diagram. For repeating events, only one node is established. For basic events and consequence events, the prior distribution of the root node in the Bayesian network is determined according to the probability. Conditioned probabilities of the intermediate nodes are obtained by the joint conditions between nodes.

3.6. Bayesian Network Prediction and Diagnosis

3.6.1. Determine the Prior Probabilities of the Root Nodes. Bayesian network is a risk quantification method based on

Bayesian reasoning. In many studies, the prior probability distribution of the basic event is a determined value based on a large number of trials or statistical data from the data manual. However, for cases with insufficient statistical data and knowledge, the failure rates of events are of great uncertainty. In this paper, we use fuzzy linguistic probabilities instead. The probability of the event is defined by a fuzzy number from the experts' elicitation. The detailed computational process is described as follows.

A group of M experts with different professional position, service time, and education level are selected for evaluating the probability of events. For the kth expert, the judgement of the likelihood for the occurrence of the ith events is described by a linguistic variable, which corresponds to a trapezoidal fuzzy number $E_{ki} = (t_1, t_2, t_3, t_4)$.

The membership function of the trapezoidal fuzzy number $E_{ki} = (t_1, t_2, t_3, t_4)$ is defined as

$$u_L(x) = \begin{cases} 0 & x \le t_1 \\ \dfrac{x - t_1}{t_2 - t_1} & t_1 < x \le t_2 \\ 1 & t_2 < x \le t_3 \\ \dfrac{t_4 - x}{t_4 - t_3} & t_3 < x \le t_4 \\ 0 & t_4 < x \end{cases}. \tag{5}$$

Similarity aggregation method (SAM) is employed for aggregating experts' judgement [9]. The weighting criteria of the experts are shown in Table 1.

Steps of SAM are described as follows.

(I) Calculate the Degree of Agreement between Expert m and Expert n. $E_m = (a_1, a_2, a_3, a_4)$ and $E_n = (b_1, b_2, b_3, b_4)$ are standard trapezoidal fuzzy numbers corresponding to the judgements of expert m and expert n. The agreement function of expert m and expert n is defined as

$$S_{mn} = 1 - \frac{1}{4}\sum_{i=1}^{4} |a_i - b_i| \tag{6}$$

which denotes the degree of similarity between the experts.

(II) Calculate Experts' Average Agreement (AA) Degree. The Average Agreement (AA) degree is defined as

$$\mathrm{AA}_m = \frac{1}{M-1}\sum_{\substack{n=1 \\ n\neq m}}^{M} S_{mn}. \tag{7}$$

(III) Calculate the Experts' Relative Agreement (RA) Degree. The Relative Agreement (RA) degree is defined as

$$\mathrm{RA}_m = \frac{\mathrm{AA}_m}{\sum_{k=1}^{M} \mathrm{AA}_k}. \tag{8}$$

(IV) Calculate Experts' Consensus Coefficient (CC) Degree. The Consensus Coefficient (CC) degree is defined as

$$\mathrm{CC}_m = \beta \cdot w_m + (1 - \beta)\,\mathrm{RA}_m, \tag{9}$$

where β is a relaxation factor of SAM method and $\beta \in [0, 1]$.

(V) Calculate the Aggregated Result of Experts' Judgments AG. The aggregated result of experts' judgments is defined as

$$E_{\mathrm{AG}} = C_1 \times E_1 + C_2 \times E_2 + \cdots + C_M \times E_M. \tag{10}$$

The center area method, which is a frequently used approach for fuzzy number defuzzification, is employed to convert the trapezoidal fuzzy number $E_{\mathrm{AG}} = (t_1, t_2, t_3, t_4)$ to a crisp number. It is expressed by

$$P^* = \frac{\int_{t_1}^{t_2} ((x - t_1)/(t_2 - t_1))\, x\, dx + \int_{t_2}^{t_3} x\, dx + \int_{t_3}^{t_4} ((t_4 - x)/(t_4 - t_3))\, x\, dx}{\int_{t_1}^{t_2} ((x - t_1)/(t_2 - t_1))\, dx + \int_{t_2}^{t_3} dx + \int_{t_3}^{t_4} ((t_4 - x)/(t_4 - t_3))\, dx} = \frac{1}{3}\frac{(t_4 + t_3)^2 - t_4 t_3 - (t_1 + t_2)^2 + t_1 t_2}{(t_4 + t_3 - t_1 - t_2)}. \tag{11}$$

Finally, the fuzzy probabilities P can be obtained from the fuzzy possibility as

$$P = \begin{cases} \dfrac{1}{10^Z} & P^* \neq 0 \\ 0 & P^* = 0, \end{cases} \tag{12}$$

where

$$Z = 2.301\left(\frac{1 - P^*}{P^*}\right)^{1/3}. \tag{13}$$

3.6.2. Determine the Conditional Probabilities of the Leaf Nodes. Conditional probabilities of the leaf nodes depend on the logical relationship of events. They can be obtained according to Figures 2 and 3.

3.6.3. Risk Analysis and Prediction Based on Bayesian Network. Based on the constructed topology network structure and the state values of nodes, forward prediction and backward diagnosis can be carried out using the Bayesian network inference. Through the forward prediction we can predict the consequences probability, while by the backward diagnosis we can get the critical causes of the failure and estimate the posterior probability of the basic events.

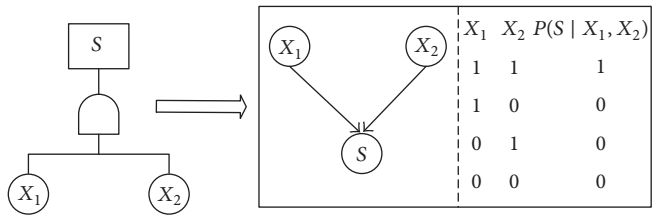

Figure 2: And gate.

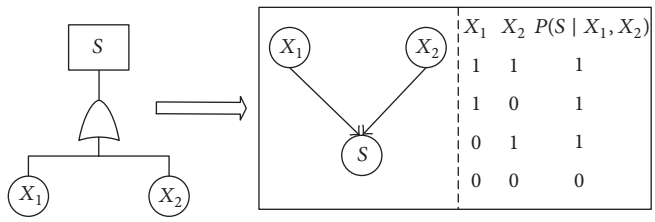

Figure 3: Or gate.

Table 1: Weighting criteria of a group of experts.

	Constitution	Score
Professional position	Senior academic	8
	Junior academic	6
	Engineer	4
	Technician	2
	Worker	1
Service time	≥20 years	8
	15–20	6
	10–15	4
	5–10	2
	≤5	1
Education level	PhD	8
	Master	6
	Bachelor	4
	HND	2
	School level	1

Table 2: Description of the basic events.

No.	Description
$X_{4\text{-}1}$	Risk of interference from the third party due to parties ignore signage
$X_{4\text{-}2}$	Risk of interference from the third party due to implicit signage
$X_{4\text{-}3}$	Risk of interference from the third party due to sabotage
$X_{4\text{-}4}$	Risk of interference from the third party due to overload
$X_{5\text{-}1}$	Risk of natural disaster due to earthquake
$X_{5\text{-}2}$	Risk of natural disaster due to flood
$X_{5\text{-}3}$	Risk of natural disaster due to subsidence
$X_{6\text{-}1}$	Risk of material defect due to design defect of material
$X_{6\text{-}2}$	Risk of material defect due to construction defect of material
$X_{7\text{-}1}$	Risk of weld-seam defect due to design defect of weld-seam
$X_{7\text{-}2}$	Risk of weld-seam defect due to construction defect of weld-seam
$X_{8\text{-}1}$	Risk of auxiliaries due to design defect of auxiliaries
$X_{8\text{-}2}$	Risk of auxiliaries due to construction defect of auxiliaries
$X_{9\text{-}1}$	Risk of external corrosion due to failure of CP
$X_{9\text{-}2}$	Risk of external corrosion due to failure of coating
$X_{9\text{-}3}$	Risk of external corrosion due to failure of soil corrosion
$X_{11\text{-}1}$	Risk of internal corrosion due to water medium
$X_{11\text{-}2}$	Risk of internal corrosion due to aid medium
$X_{12\text{-}1}$	Risk of internal corrosion due to failure of inhibitor
$X_{12\text{-}2}$	Risk of internal corrosion due to failure of coating
$X_{12\text{-}3}$	Risk of internal corrosion due to debonding

4. Risk Analysis of Natural Gas Pipeline Failure Based on Fuzzy Bayesian Network with a Bow-Tie Model

4.1. Bow-Tie Model of Natural Gas Pipeline Failure

4.1.1. Analysis of Risk Factors and Constructing the Fault Tree. Failure of natural gas pipelines refers to gas leakage of pipelines due to puncture and rupture, which is the critical event of the Bow-tie model. In order to evaluate the risk of natural gas pipeline failure, risk factors in the natural gas pipeline transportation process should be analyzed at first.

The fault tree is constructed based on a comprehensive analysis of natural gas pipeline failures and standards of gas pipelines design, construction, operation, and maintenance. The fault tree is shown in Figure 4 and basic events in the fault tree are listed in Table 2.

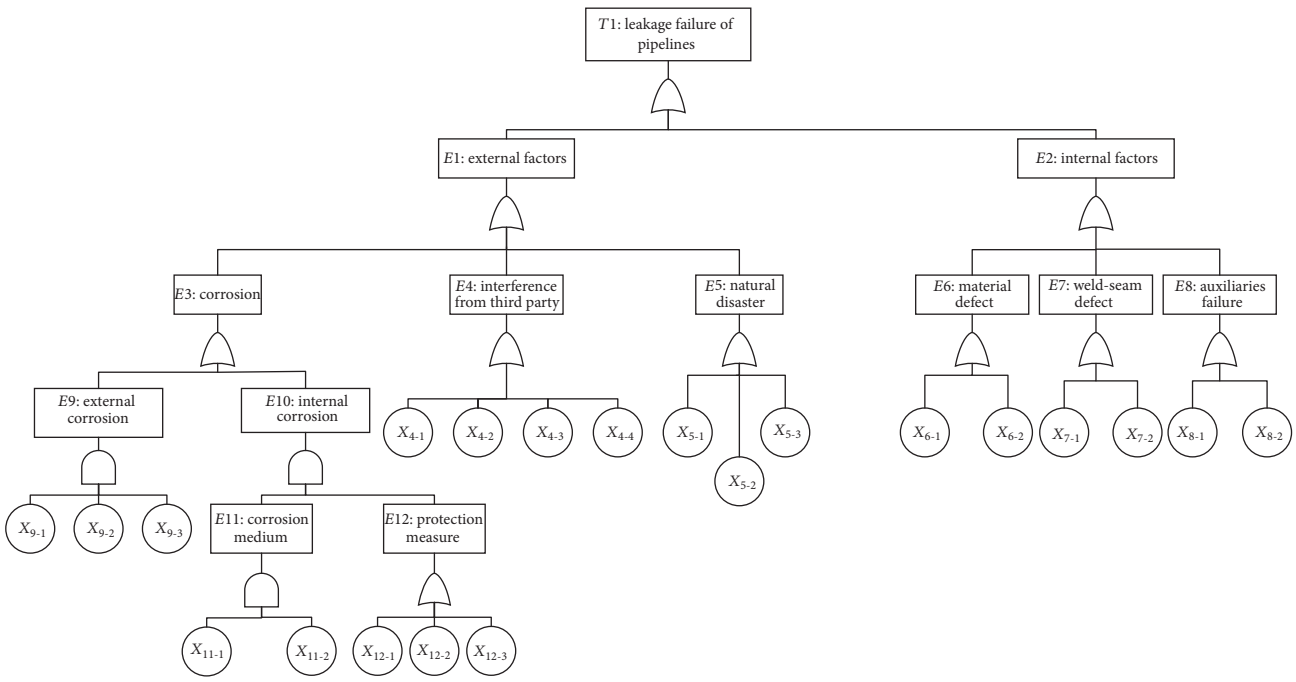

Figure 4: The fault tree of the natural gas leakage.

The fault tree displays the potential factors that may cause pipeline leakage. The leakage failure of natural gas pipeline may occur due to internal and external factors. External factors include corrosion, interference from the third party, and natural disaster, while internal factors include material defect, weld-seam defect, and auxiliaries' failure.

Corrosion may lead to pipeline puncture and rupture, which determine the way and rate of gas leakage. There are two kinds of corrosion, internal corrosion and external corrosion. Internal corrosion is mostly due to corrosive medium and failure of corrosion protection measures. Corrosive medium includes water and aid medium. Corrosion protection measures consist of injection of corrosion inhibitor, anticorrosion coatings fabrication, and pipe cleaning. External corrosion is mainly attributed to the failure of CP, the failure of coating, and soil corrosion.

The interference from third party is also an important risk factor, including parties ignore signage, implicit signage, sabotage, and overload that may cause serious damage to pipeline. Natural disasters including earthquake, flood, and subsidence also cannot be ignored for pipeline leakage.

The material and weld-seam defect are inherent defect caused by incorrect design or error operation factor during the design and construction stages. Once there are external forces, these defects may lead to pipeline leakage. Besides, failure of pipeline auxiliaries such as flange, valve, due to design fault, or aging may also lead to a leakage occurrence or situations out of control.

4.1.2. Event Tree Analysis. The main component of natural gas is methane, with a small amount of ethane, propane, and sulfur gases. And the characteristics of natural gas pipeline leakage are different from other transport modes of dangerous chemicals.

The consequences of the natural gas leakage are serious. Natural gas is highly flammable and explosive. There will be an explosion if the leakage concentration reaches 5%. So the space confinement is the critical factor which determines what kind of disaster will happen.

Once the natural gas leakage occurs, gas will spread with wind, which will result in a wide range of casualties. Gas lighter than air especially will diffuse in the air. It easily forms an explosive mixture with air and explodes wherever there is a fire source. Gas heavier than air will gather in the ground, ditches, and blind corner, with accumulation for a long time. Once it catches fire, there will be an explosion with serious air pollution.

The graphical environment of areas along the pipeline is much complicated, sometimes with a large population. Fire, explosion, or other accidents due to natural gas leakage will cause enormous losses and threat to the property and safety of the lives of the people.

The potential consequences of natural gas pipeline leakage may be detonation or deflagration, fireball or jet fire, confined vapor cloud explosion, flash fire, with casualties, poisonousness, contamination and material loss of different degree. Safety barrier such as ignition and evacuation should be carried out in order to reduce the loss of the gas pipeline leakage. In the event tree, select the leakage of natural gas as the primary event. We can get all of the consequence of the accident, which is shown in Figure 5. The detailed descriptions of the consequences are listed in Table 3.

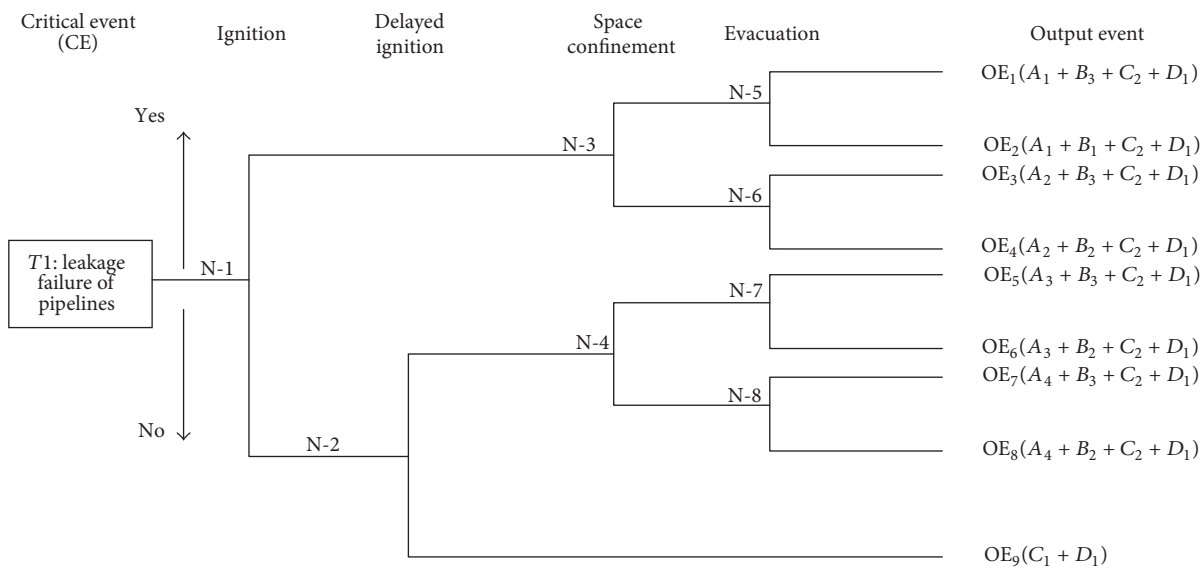

Figure 5: The event tree of the natural gas leakage.

Table 3: Consequence of the event tree.

No.	Consequence
A_1	Detonation or deflagration
A_2	Fireball or jet fire
A_3	Confined vapor cloud explosion
A_4	Flash fire
B_1	Severe casualties
B_2	Light casualties
B_3	No casualties
C_1	Severe poisoning and contamination
C_2	Light poisoning and contamination
D_1	Material loss

Table 4: Fuzzy scales.

Linguistic terms	Scale
Very low	$(0, 0, 0.1, 0.2)$
Low	$(0.1, 0.25, 0.4)$
Medium	$(0.3, 0.5, 0.7)$
High	$(0.6, 0.75, 0.9)$
Very high	$(0.8, 0.9, 1, 1)$

4.1.3. Bow-Tie Model Construction. With the fault tree on the left and the event tree on the right, Bow-tie model of natural gas pipeline leakage is shown in Figure 6.

4.2. Bayesian Network for Natural Gas Pipeline Failures. According to the events, the logic gate, and the connection strength involved in the Bow-tie diagram, we established the main mapping relation of the Bayesian network, according to which the Bow-tie diagram is converted to a Bayesian network. The Bayesian Network for natural gas pipeline failures is shown in Figure 7.

4.3. Statistical Analysis

4.3.1. Calculate the Failure Probability of the Basic Events. Lack of data and uncertainty in the risk assessment process is a major problem in the natural gas pipeline risk analysis. Here experts' judgements are used to evaluate the failure probability of the basic events, in terms of linguistic variables with a number of linguistic terms such as "very high," "high," and "low." To solve the language ambiguity problem, fuzzy sets theory is employed to convert the linguistic term to a fuzzy number. While the number of the linguistic terms of a linguistic variable increases, the accuracy of the model increases but so does the numerical complexity. In order to balance the accuracy and complexity of the model, 5-granular scale is chosen in this analysis. Experts make a judgement for the failure probability of each event with linguistic terms such as very low, low, medium, high, and very high. Each linguistic term is defined as a trapezoidal fuzzy number in Table 4.

Four experts from related areas of natural gas pipeline transportation industry are employed for evaluating the failure probability of events with uncertainty and lack of sufficient data. Profession position, education level, and service time are considered in the expert selected process to reflect the actual situation objectively. The weighting criteria of experts are shown in Table 5.

The weight coefficients of experts are changed along with their different backgrounds and experts' scores. Experts' judgements are aggregated by the SAM technique discussed in Section 3. The defuzzified possibilities are obtained by (11). Equations (12) and (13) are employed to get the probabilities. Detailed results are shown in Table 6.

Conditional probabilities depend on the logical relationship of events. They can be obtained according to Figures 2 and 3.

Based on the constructed topology network structure and the state values of nodes, the probability updating is

Table 5: Weighting criteria of four experts.

Expert	Professional position	Service time	Education level	Weighting score
Expert 1	Senior academic	≥20 years	PhD	0.32
Expert 2	Junior academic	15–20	PhD	0.3
Expert 3	Engineer	5–10	PhD	0.21
Expert 4	Junior academic	15–20	Bachelor	0.17

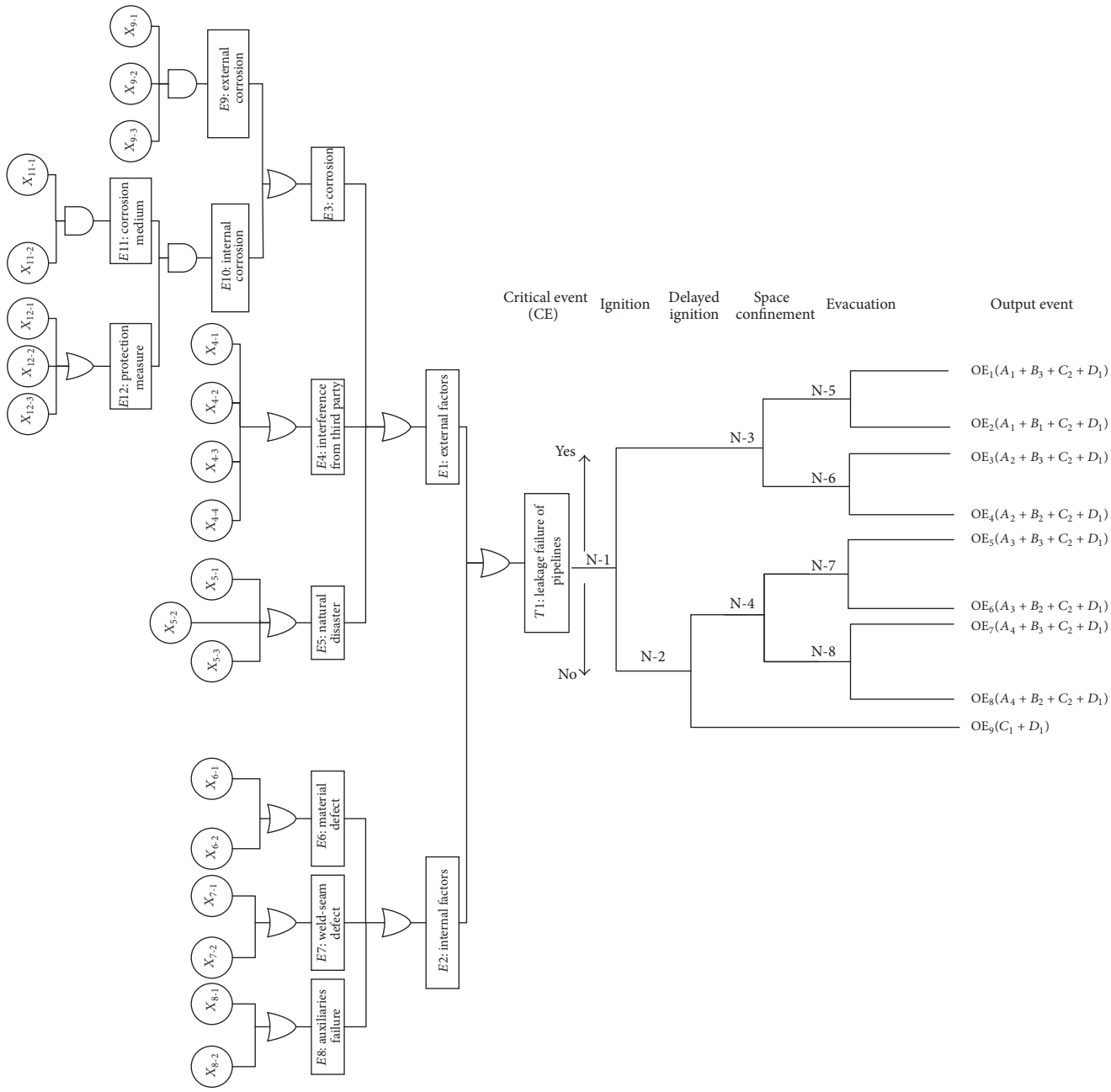

Figure 6: The Bow-tie model of natural gas leakage.

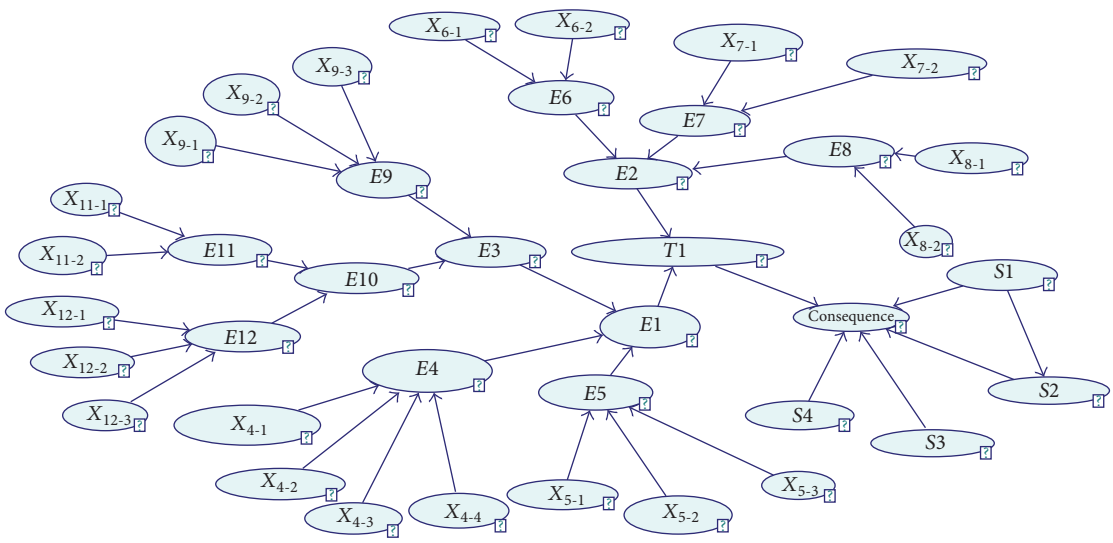

Figure 7: The Bayesian network of natural gas leakage.

Table 6: Prior probabilities of basic events based on SAM.

Basic event	Linguistic expressions	Aggregated expert decision				Defuzzed possibility	Prior probability
$X_{4\text{-}1}$	(m, m, m, l)	0.2619	0.4524	0.4524	0.6429	0.4524	0.0035
$X_{4\text{-}2}$	(m, m, l, l)	0.2121	0.3902	0.3902	0.5682	0.3902	0.0021
$X_{4\text{-}3}$	(l, m, m, l)	0.2015	0.3769	0.3769	0.5523	0.3769	0.0019
$X_{4\text{-}4}$	(l, vl, vl, vl)	0.0272	0.0680	0.1408	0.2544	$1.26E-01$	$4.06E-05$
$X_{5\text{-}1}$	(vl, vl, vl, vl)	0	0	0.1000	0.2000	$7.78E-02$	$5.66E-06$
$X_{5\text{-}2}$	(vl, l, l, vl)	0.0508	0.1269	0.1761	0.3015	$1.67E-01$	$1.16E-04$
$X_{5\text{-}3}$	(l, l, vl, vl)	0.0561	0.1402	0.1841	0.3121	$1.76E-01$	$1.41E-04$
$X_{6\text{-}1}$	(vl, vl, l, l)	0.0439	0.1098	0.1659	0.2879	$1.55E-01$	$8.88E-05$
$X_{6\text{-}2}$	(l, l, l, l)	0.1000	0.2500	0.2500	0.4000	$2.50E-01$	$4.80E-04$
$X_{7\text{-}1}$	(l, vl, l, l)	0.0735	0.1839	0.2103	0.3471	$2.06E-01$	$2.45E-04$
$X_{7\text{-}2}$	(l, l, vl, l)	0.0781	0.1952	0.2171	0.3562	$2.13E-01$	$2.78E-04$
$X_{8\text{-}1}$	(vl, vl, vl, l)	0.0196	0.0491	0.1295	0.2393	$1.13E-01$	$2.62E-05$
$X_{8\text{-}2}$	(m, m, h, l)	0.3263	0.5057	0.5057	0.6851	0.5057	0.0052
$X_{9\text{-}1}$	(l, l, vl, l)	0.0781	0.1952	0.2171	0.3562	$2.13E-01$	$2.78E-04$
$X_{9\text{-}2}$	(l, l, vl, l)	0.0804	0.2009	0.2205	0.3607	$2.17E-01$	$2.96E-04$
$X_{9\text{-}3}$	(h, m, h, m)	0.4545	0.6288	0.6288	0.8030	0.6288	0.0117
$X_{11\text{-}1}$	(l, l, l, l)	0.1000	0.2500	0.2500	0.4000	$2.50E-01$	$4.80E-04$
$X_{11\text{-}2}$	(l, l, l, vl)	0.0804	0.2009	0.2205	0.3607	$2.17E-01$	$2.96E-04$
$X_{12\text{-}1}$	(l, l, l, l)	0.1000	0.2500	0.2500	0.4000	0.25	$4.80E-04$
$X_{12\text{-}2}$	(l, l, l, vl)	0.0804	0.2009	0.2205	0.3607	$2.17E-01$	$2.96E-04$
$X_{12\text{-}3}$	(l, l, vl, l)	0.0781	0.1952	0.2171	0.3562	$2.13E-01$	$2.78E-04$

conducted by Bayesian dynamic reasoning and analysis. The failure probability of natural gas pipeline leakage calculated is 0.014, which implies that the pipeline leakage is likely to occur. The occurrence probabilities of consequences are shown in Table 7.

For natural gas pipeline leakage risk analysis, we set leakage failure and OE6 as the evidence to estimate the posterior probability of the basic events. Results are shown in Table 8.

According to Table 8 and Figure 8, for most of the basic events, the posterior probabilities are greater than the prior probabilities. The most likely causes of natural gas pipeline leakage occurrence are parties ignore signage, implicit signage, overload, and design defect of auxiliaries. The most probable accident evolution paths are that (1) material design defect and material construction defect causes the pipeline leakage; (2) weld seam design problem and weld seam construction problem cases leakage

Table 7: Occurrence probabilities of consequences.

Consequences	Occurrence probability
OE0	$9.86E-01$
OE1	$7.36E-03$
OE2	$4.90E-03$
OE3	$8.17E-04$
OE4	$5.45E-04$
OE5	$2.21E-04$
OE6	$1.47E-04$
OE7	$2.45E-05$
OE8	$1.63E-05$
OE9	$1.26E-05$

Table 8: Posterior probabilities of basic events.

Basic event	Prior probability	Posterior probability
$X_{4\text{-}1}$	0.0035	0.2492
$X_{4\text{-}2}$	0.0021	0.1495
$X_{4\text{-}3}$	0.0019	0.0019
$X_{4\text{-}4}$	$4.06E-05$	$1.35E-01$
$X_{5\text{-}1}$	$5.66E-06$	$4.00E-04$
$X_{5\text{-}2}$	$1.16E-04$	$8.30E-03$
$X_{5\text{-}3}$	$1.41E-04$	$1.00E-03$
$X_{6\text{-}1}$	$8.88E-05$	$6.30E-03$
$X_{6\text{-}2}$	$4.80E-04$	$3.42E-03$
$X_{7\text{-}1}$	$2.45E-04$	$1.74E-02$
$X_{7\text{-}2}$	$2.78E-04$	$1.98E-02$
$X_{8\text{-}1}$	$2.62E-05$	$1.70E-03$
$X_{8\text{-}2}$	0.0052	0.3702
$X_{9\text{-}1}$	$2.78E-04$	$2.78E-04$
$X_{9\text{-}2}$	$2.96E-04$	$2.96E-04$
$X_{9\text{-}3}$	0.0117	0.0117
$X_{11\text{-}1}$	$4.80E-04$	$4.80E-04$
$X_{11\text{-}2}$	$2.96E-04$	$2.96E-04$
$X_{12\text{-}1}$	$4.80E-04$	$4.80E-04$
$X_{12\text{-}2}$	$2.96E-04$	$2.96E-04$
$X_{12\text{-}3}$	$2.78E-04$	$2.78E-04$

failure. So it is important to strengthen the prevention of the weak links in order to control the occurrence of the accident.

The analysis also shows that once the natural gas pipeline leakage occurs, if action was not taken timely, natural gas will be mixed with the air and reaches a certain concentration quickly, resulting in fire and explosion. So it is necessary to take action on time to mitigate the consequences of the accident.

5. Conclusions

Leakage of natural gas pipeline may result in serious accidents such as fire, exposition, and combustion with heavy casualties and huge economic losses. A comprehensive and effective risk assessment method is of great significance for risk analysis of natural gas pipelines. Fault tree analysis, event tree analysis, and Bow-tie model are excellent methods for risk analysis. However, they only conduct the analysis from the causes to the results, without reverse inference.

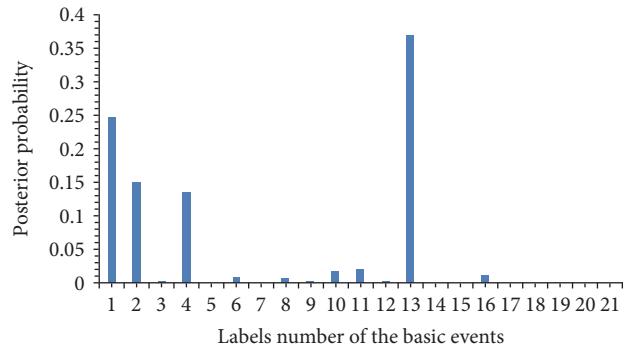

Figure 8: Histogram of the posterior probability of basic events.

In this paper, a quantitative risk analysis approach for natural gas pipelines is constructed by a Bow-tie model coupled with Bayesian network. After identifying the potential risk factors for leakage of natural gas pipelines and finding the possible consequences of pipeline leakage, a Bow-tie model for risk management of natural gas pipelines is constructed and then converted to a Bayesian network according to a mapping relation. In the Bayesian network, the quantification of the risk factors associated with pipeline leakage depends on the prior probability of the basic events, which are often not reliable, applicable, or available. Fuzzy logic is employed as an approach to solve this problem. The failure probabilities of the basic events are obtained from the fuzzy possibility, which is calculated by converting the experts' linguistic judgement to aggregated results with similarity aggregation method and defuzzification techniques.

Through forward prediction of the Bayesian network, we can get the occurrence probabilities of natural gas pipeline leakage and the consequences. The posterior probabilities of basic events and consequences are determined by backward diagnosis of the Bayesian network, which can be used to find the weak links existing in the natural gas pipelines. The main causes of natural gas pipeline leakage occurrence are design defect of auxiliaries and interference for the third party, especially the parties ignore signage. The corresponding preventive measures will decrease the probability of natural gas leakage. The disaster degree of accidents after natural gas leakage will be reduced to the least extent if mitigation measures are taken on time.

The framework of the proposed method improves the scientific and effective natural gas pipeline management and provides technical support for the implementation of the natural gas pipeline integrity management. However, data presented in this study mainly relies on the expert' judgement. In the future research, historical data and statistic data will be concluded with the approach. The sensitivity analysis should also be discussed.

Competing Interests

The authors declare that there is no conflict of interests regarding the publication of this paper.

Acknowledgments

This work was supported in part by the National Nature Science Foundation of China under Grant 61402534, by the Shandong Provincial Natural Science Foundation, China, under Grant ZR2014FQ002, and by the Fundamental Research Funds for the Central Universities under Grant 16CX02010A.

References

[1] A. Jamshidi, A. Yazdani-Chamzini, S. H. Yakhchali, and S. Khaleghi, "Developing a new fuzzy inference system for pipeline risk assessment," *Journal of Loss Prevention in the Process Industries*, vol. 26, no. 1, pp. 197–208, 2013.

[2] E. Cagno, F. Caron, M. Mancini, and F. Ruggeri, "Using AHP in determining the prior distributions on gas pipeline failures in a robust Bayesian approach," *Reliability Engineering and System Safety*, vol. 67, no. 3, pp. 275–284, 2000.

[3] A. W. Dawotola, P. H. A. J. M. Van Gelder, and J. K. Vrijling, "Risk assessment of petroleum pipelines using a combined analytical hierarchy process—fault tree analysis (AHP-FTA)," in *Proceedings of the 7th International Probabilistic Workshop*, pp. 1942–1948, Delft, The Netherlands, November 2009.

[4] Y. Guo, X. Meng, D. Wang, T. Meng, S. Liu, and R. He, "Comprehensive risk evaluation of long-distance oil and gas transportation pipelines using a fuzzy Petri net model," *Journal of Natural Gas Science and Engineering*, vol. 33, pp. 18–29, 2016.

[5] A. Adebayo and A. S. Dada, "An evaluation of the causes of oil pipeline incidents in oil and gas industries in Niger Delta region of Nigeria," *Journal of Engineering Applied Science*, vol. 3, no. 3, pp. 279–281, 2008.

[6] European Gas Pipeline Incident Data Group, "Gas pipeline incident," in *9th Report of the European Gas Pipeline Incident Data Group (Period 1970–2013)*, 2015.

[7] J. A. Vílchez, S. Sevilla, H. Montiel, and J. Casal, "Historical analysis of accidents in chemical plants and in the transportation of hazardous materials," *Journal of Loss Prevention in the Process Industries*, vol. 8, no. 2, pp. 87–96, 1995.

[8] D. Yuhua and Y. Datao, "Estimation of failure probability of oil and gas transmission pipelines by fuzzy fault tree analysis," *Journal of Loss Prevention in the Process Industries*, vol. 18, no. 2, pp. 83–88, 2005.

[9] S. M. Lavasani, N. Ramzali, F. Sabzalipour, and E. Akyuz, "Utilisation of Fuzzy Fault Tree Analysis (FFTA) for quantified risk analysis of leakage in abandoned oil and natural-gas wells," *Ocean Engineering*, vol. 108, pp. 729–737, 2015.

[10] D. Zamalieva, A. Yilmaz, and T. Aldemir, "A probabilistic model for online scenario labeling in dynamic event tree generation," *Reliability Engineering and System Safety*, vol. 120, pp. 18–26, 2013.

[11] A. J. Brito and A. T. de Almeida, "Multi-attribute risk assessment for risk ranking of natural gas pipelines," *Reliability Engineering & System Safety*, vol. 94, no. 2, pp. 187–198, 2009.

[12] A. Shahriar, R. Sadiq, and S. Tesfamariam, "Risk analysis for oil & gas pipelines: a sustainability assessment approach using fuzzy based bow-tie analysis," *Journal of Loss Prevention in the Process Industries*, vol. 25, no. 3, pp. 505–523, 2012.

[13] N. Khakzad, F. Khan, and P. Amyotte, "Quantitative risk analysis of offshore drilling operations: a Bayesian approach," *Safety Science*, vol. 57, pp. 108–117, 2013.

[14] N. Khakzad, F. Khan, and P. Amyotte, "Safety analysis in process facilities: comparison of fault tree and Bayesian network approaches," *Reliability Engineering & System Safety*, vol. 96, no. 8, pp. 925–932, 2011.

[15] X. Li, G. Chen, and H. Zhu, "Quantitative risk analysis on leakage failure of submarine oil and gas pipelines using Bayesian network," *Process Safety & Environmental Protection*, vol. 103, pp. 163–173, 2016.