Hindawi Publishing Corporation
Science and Technology of Nuclear Installations
Volume 2015, Article ID 650810, 11 pages
http://dx.doi.org/10.1155/2015/650810

Research Article

Safety Assessment of Low-Contaminated Equipment Dismantling at Nuclear Power Plants

Egidijus Babilas, Eugenijus Ušpuras, Sigitas Rimkevičius, Gintautas Dundulis, and Mindaugas Vaišnoras

Lithuanian Energy Institute, Breslaujos Street 3, LT-44403 Kaunas, Lithuania

Correspondence should be addressed to Egidijus Babilas; egidijus.babilas@lei.lt

Received 9 September 2014; Revised 16 January 2015; Accepted 16 January 2015

Academic Editor: Leon Cizelj

Copyright © 2015 Egidijus Babilas et al. This is an open access article distributed under the Creative Commons Attribution License, which permits unrestricted use, distribution, and reproduction in any medium, provided the original work is properly cited.

The decommissioning of nuclear facilities requires adequate planning and demonstration that dismantling and decontamination activities can be conducted safely. Existing safety standards require that an appropriate safety assessment be performed to support the decommissioning plan for each facility (International Atomic Energy Agency, 2006). This paper presents safety assessment approach used in Lithuania during the development of the first dismantling and decontamination project for Ignalina NPP. The paper will mainly focus on the identification and assessment of the hazards raised due to dismantling and decontamination activities at Ignalina Nuclear Power Plant and on the assessment of the nonradiological and radiological consequences of the indicated most dangerous initiating event. The drop of heavy item was indicated as one of most dangerous initiating events for the discussed Ignalina Nuclear Power Plant dismantling and decontamination project. For the analysis of the nonradiological impact the finite element model for the load drop force calculation was developed. The radiological impact was evaluated in those accident cases which would lead to the worst radiological consequences. The assessments results show that structural integrity of the building and supporting columns of building structures will be maintained and radiological consequences are lower than the annual regulatory operator dose limit.

1. Introduction

Existing safety standards require that an appropriate safety assessment be performed to support the decommissioning plan for each facility. These facilities will vary in size and complexity (e.g., from reprocessing plants to small research laboratories), in existing and potential hazards, in the level of radioactive contamination, in their operational history (e.g., with radiological incidents and accidents), and in the complexity of dismantling and decontamination (D&D) activities. In addition, a facility undergoing D&D could be one of several interdependent facilities on one site. Similarly, the facilities will be subject to different decommissioning strategies (e.g., immediate dismantling, deferred dismantling or entombment) and different approaches (e.g., single phase or multiphase decommissioning). Thus, a range of approaches to developing and reviewing safety assessments for the decommissioning of facilities could be adopted (e.g., single assessments for each facility, assessments for separate D&D phases, or parallel interrelated multiple facility assessments). In view of these considerations, a graded approach should be applied to the development and review of safety assessments for decommissioning. Nonradiological hazards to workers, the public, and the environment should be addressed as part of the safety assessment for decommissioning as well.

All relevant hazards (e.g., sources of harm) to workers, the public, and the environment should be considered in the decommissioning safety assessment, including [1]

(i) radiation exposures, for example, external exposure from direct radiation and other radiation sources (including criticality), internal exposure due to inhalation, ingestion or cuts and abrasions, and loss of containment leading to the uncontrolled release of radionuclides;

(ii) toxic and other dangerous materials, for example, asbestos, flammable materials, carcinogens, and chemicals used for decontamination purposes;

(iii) industrial hazards, for example, dropped loads, work at heights, fires, high temperatures, high pressures, noise, dust, and asbestos.

The Ignalina Nuclear Power Plant (INPP) has two RBMK-1500 graphite moderate boiling water multichannel reactors. The Ignalina Nuclear Power Plant (NPP) Unit 1 was shut down at the end of 2004 while Unit 2 was shut down at the end of 2009. As a result of the political dialogue leading up to EU enlargement, Lithuania agreed to the early decommissioning of its reactors. The INPP issued Preliminary Decommissioning Plan in 2000. After that, in 2001, the report "Selection of the Decommissioning Strategy for INPP" was issued. And in November 2002, the Decree of the Lithuanian Government considers previous comparison integrated in the global Lithuanian socioeconomic and political frame select Immediate Dismantling option to prevent heavy long-term social, economic, financial, and environmental consequences. According to the INPP Final Decommissioning Plan the INPP decommissioning process is split into several dismantling and decontamination projects. Each of these D&D projects covers a particular field of activity, for example, initial primary circuit decontamination or dismantling of equipment using "room by room" or "system by system" approach. Paper discusses safety assessment approach used for the first D&D project at Ignalina NPP related to the dismantling and decontamination of the equipment located in Building 117/1. Accumulated experience of Lithuanian Energy Institute experts in preparation of safety analysis for operating NPP [2] was successfully adopted for the development of D&D works safety assessment at Ignalina NPP. Additionally, to the existing safety assessment practice, special HAZOP method [3, 4] for the identification and evaluation of potential hazards, raised due to the proposed D&D activities in Building 117/1, was used. The HAZOP study considered and reviewed the potential hazard management strategies available to satisfy the ALARA principle. After completion of the HAZOP study, a list of faults (fault schedule) was generated.

Main focus during presented project is on the analysis of the industrial hazards, because it is dominant in current case when dismantling is performed for heavy equipment with low contamination level. The drop of heavy items was identified as the one of most dangerous initiating event in the presented case. The dropping of heavy dismantled item can destroy dismantling building and adjacent buildings and equipment as well as leading to the spread of radioactivity. Dismantled equipment parts are lifted by a crane to be transferred to storage or decontamination area. While lifting heavy items, it is necessary to know the radiological and nonradiological consequence of an unlikely drop event.

2. Overview of Activities Related with Dismantling of ECCS Vessels

As it was mentioned, at the Ignalina NPP it was decided to split overall decommissioning into separate projects. Each of these D&D projects covers a particular field of activity such as dismantling of equipment using "room by room" or "system by system" approach. Due to that approach several separate projects related to the dismantling and decontamination of the low-contaminated equipment were initiated. One of the first D&D projects at Ignalina NPP was dismantling and decontamination of the emergency core cooling system (ECCS) equipment located in the Building 117/1. Main part of the equipment which is directed to the dismantling belongs to the ECCS vessels (Figure 1).

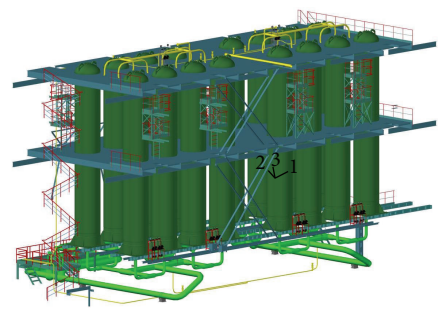

Figure 1: ECCS pressure vessels.

The contamination of the equipment directed to the dismantling was from the free release level up to low level waste [5]. D&D of Building 117/1 involves different types of activities, tools, equipment, and systems. There is potential for wide range of accidents during various stages of Building 117/1 D&D project creating risk for workers and environment. Occurrence of accidents is possible due to many different operations involving movement and handling of large pieces of equipment or contaminated parts. Size reduction and decontamination processes are capable of producing hazards as well. The following main hazards with potentially significant consequences associated with D&D activities were identified:

(i) drop of heavy loads (cut ECCS vessel rings, pipe segments, and crane): this is one of the most common hazards creating risk of structure damage, airborne release, workers injury, or fatality; falling heavy item can damage building structures and live services;

(ii) drop of highly contaminated items like filters, waste drums can result in release of airborne contamination;

(iii) loss of ventilation: mobile filtering units are intended to maintain adequate working environment in localized containments during D&D operations and prevent spread of contamination; loss of ventilation can lead to operator asphyxiation, increased external dose exposure, internal exposure, and potential for spread of contamination;

(iv) failure/malfunction of building ventilation system can lead to overpressure of building and potential uncontrolled release of activity through building structural leakages outside Building 117/1;

(v) fire/explosion: use of oxyacetylene cutting technique has the potential to create fire and explosion hazards.

Based on that, safety assessment mainly focuses on the above-mentioned hazards. The following sections of the paper will discuss safety assessment approach used in current project as well as presenting main results of the performed accident analysis.

3. Safety Assessment Methodology Used in Ignalina NPP D&D Projects

3.1. Hazards Identification Methodology. The safety assessment process for decommissioning provides a basis on which the safety of workers and the public can be ensured through the evaluation of the consequences of potential hazards and the identification of the ways that they can mitigated, so that the associated residual risks are as low as reasonably achievable (ALARA). The safety assessment should identify necessary preventive, protective, and mitigating measures and should justify that these will be suitable and sufficient to ensure safety during decommissioning, in compliance with the relevant safety requirements and criteria [1]. The main steps of the harmonized safety assessment methodology for decommissioning are listed below:

(i) safety assessment framework;

(ii) description of facility and decommissioning activities;

(iii) hazard analysis: identification and screening;

(iv) development of fault schedule;

(v) hazard analysis: evaluation;

(vi) evaluation of results and identification of safety control measures.

One of the first steps in developing a safety assessment for decommissioning activities is the identification of existing and future hazards (both radiological and nonradiological) that can affect workers, members of the public, and the environment during decommissioning activities under normal and accident conditions and then the identification of engineered and administrative control measures to prevent, eliminate, or mitigate the hazards and their consequences It is critical to the safety assessment that all reasonably foreseeable initiating events and accident scenarios are identified.

Analysis of the possible hazards, raised by the proposed D&D technology, starts before Safety Justification Report (SJR) development. The safety analysis should identify all relevant scenarios arising either from decommissioning activities or from accident situations in which the screened hazards could be realized. The identification of initiating events and the analysis of their evolution should be carried out using an appropriate technique (e.g., hazard and operability analysis (HAZOP)) and appropriate sources of information, such as checklists, maps of dose rates for the facility, inventories of radioactive waste, and feedback of experience from the decommissioning of other facilities [3]. HAZOP study identifies faults and consequent hazards in support of the Safety Assessment. After completion of the HAZOP study, a list of identified potential initiating events and their outcome are summarized in the Fault Schedule. A Fault Schedule should include all the hazards and fault/accident conditions that are applicable to the decommissioning activities; these may be grouped appropriately to reduce the number of scenarios that require analysis. From the findings of the fault identification study it has been possible to identify the bounding case fault sequences (subject to accident analysis) which can potentially lead to the worst case radiological consequences. These either have the highest activity inventory in a form which can be readily mobilized and dispersed or involve the highest radiation dose rates. The consequences of these bounding accident scenarios should be assessed on a conservative basis (unmitigated dose) assuming failed protection and with any mitigating systems removed from the considerations. The results of the safety assessment are compared with the relevant safety criteria, and, where necessary, the limits, controls, and conditions needed to secure the safe conduct of decommissioning are identified. All the results of the safety assessment are adequately documented in the SJR.

The above described approach was adopted for the safety assessment of the D&D projects at Ignalina NPP. During development of the first D&D project at Ignalina NPP reasonably foreseeable hazards, the bounding case accident scenarios occurring due to D&D activities in Building 117/1, which can lead to radiological consequences or workers injuries, were identified. Each individual fault has been grouped with a bounding accident scenario as follows:

(i) drop of heavy loads accidents;

(ii) accidents involving the release of contaminants from HEPA filter;

(iii) radiological consequences of radioactive waste drum drop;

(iv) loss of ventilation in localised containments/ventilation inadequate.

The performed assessment showed that possible accidents due to drops of heavy items (ECCS vessel ring) are most dangerous for the D&D activities in Building 117/1. The consequences of this scenario were assessed on a conservative basis, assuming failed protection and no operating mitigating systems. The Hygiene Standard HN 73 : 2001 [6] sets the annual regulatory maximum effective dose limit for a worker in normal conditions at 50 mSv (this being coupled with a 100 mSV cumulative effective dose limit in a 5-year period of time), while the Ignalina NPP defined an annual limit of 16 mSv. In this instance the radiological accident consequences were compared with a more conservative annual dose limit of 16 mSv.

Additionally, drop of heavy item potentially can damage building structures and result in spreading of additional airborne activity. The evaluation of possible damage to Building 117/1 structures due to the drop of ECCS vessel ring from high height and crane with load mishandling (mishandling ECCS vessel ring) during transportation were performed in the scope of Building 117/1 D&D project safety justification.

Analysis results of the consequences (both radiological and structural) during dismantling of the heavy equipment are provided in this paper.

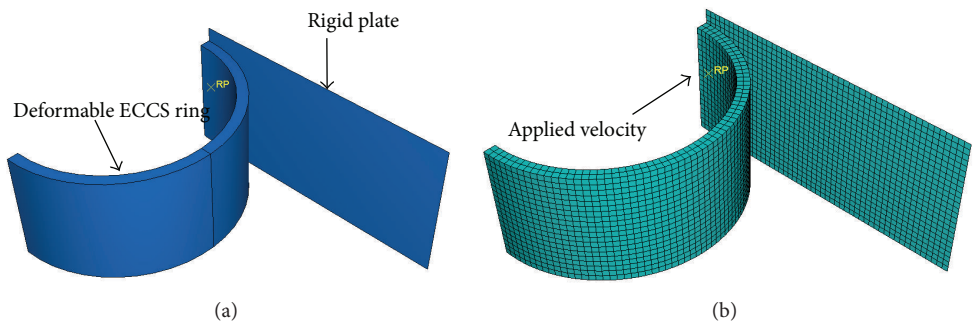

Figure 2: Simplified model for drop load calculation. (a) Finite element model parts. (b) Meshed finite element model and applied velocity.

3.2. Structural Integrity Analysis Methodology. While dismantling NPP heavy equipment the hazards as drop of heavy load or mishandling crane with load can occur. The consequences of these events shall be evaluated. The dropping of heavy dismantled item or mishandling crane with load can destroy dismantling building and adjacent buildings and equipment. Therefore these hazards during transportation should be evaluated during decontamination. Two cases of accident were presented in this paper:

(i) drop of ECCS vessel ring from high height;

(ii) mishandling crane with load during transportation.

The structural integrity analysis of structures during dismantling of the heavy equipment was performed using finite element method by the following analyses:

(i) calculation of the impact load in case of heavy equipment drop or mishandling;

(ii) structural integrity analysis of structures using calculated impact load.

The impact load in case of heavy equipment drop was calculated from assumption that one-piece ring of ECCS vessel (mass of dropped part 3200 kg (weight of removed part of vessel, whose height is 0.86 m)) is dropped from height 16 m. In the analysis it was assumed that cut ECCS vessel part will be lifted by an Electric Portal Crane (EPC), moved to the connection area between levels 0.00 m and −3.60 m, and lowered to −3.60 m level. EPC crane will be installed at floor level +13.20 m. The lower edge of the roof girders is located at level +18.00 m, so the maximal possible lifting height will be lower than level +18.00. Taking into account height difference between −3.60 m level floors and maximal possible lifting height, maximal possible drop height of one-piece ring of ECCS vessel (mass of dropped part 3200 kg (weight of removed part of vessel, whose height is 0.86 m)) was assumed equal to 16 metres. The analysis of the impact load was performed using ABAQUS/Explicit. The simplified model (Figure 2) of drop was prepared for analysis. Symmetry conditions are used and only a quarter of ring was modeled. Deformable ring of ECCS vessel hits rigid surface. Initial velocity vector of ring is assumed to be perpendicular to the rigid surface.

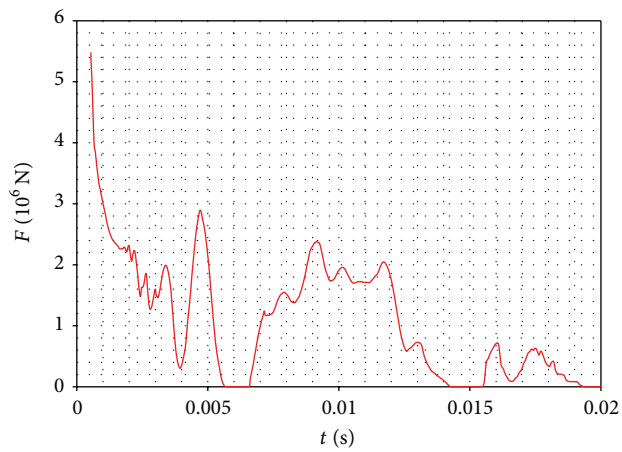

Figure 3: Impact force variation. Mass 3200 kg dropped from height 16 m.

The impact load is obtained as reaction force of rigid surface. Variation of drop force for ring quarter is presented in Figure 3. The maximum value of drop force reaches $5.4 * 10^6$ N at impact moment. The force oscillations are related to a deformation of the ring of ECCS vessel.

Loads as a result of mishandling crane with load were calculated using the same methodology with, respectively, mass and primary speed of impacting object. The impact load was calculated in case of mishandling ECCS vessel ring (3200 kg) during transportation of velocity 0.4 m/s. Variation of mishandling force for ring quarter is presented in Figure 4. The maximum value of impact force reaches $3.0 * 10^5$ N at impact moment. The force oscillations are related to a deformation of the ring of ECCS vessel.

The next step is the static analysis of structural integrity of the structures using finite element method (software ABAQUS/Standard). The calculated impact force was used in this analysis.

The reinforced concrete structures and steel components were modelled using shell elements. Element type S4 [7] is used in the models for the structural integrity analysis of structures during accident. Element type S4 is a fully integrated, general-purpose, and finite-membrane-strain shell element. The element's membrane response is treated with

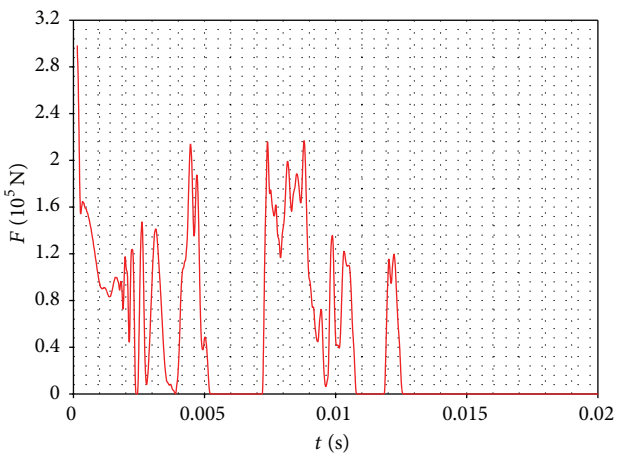

Figure 4: Impact force variation in case of load mishandling. Mass 3200 kg, velocity 0.4 m/s.

an assumed strain formulation that gives accurate solutions to in-plane bending problems, is not sensitive to element distortion, and avoids parasitic locking. The element has one integration location per element. The reinforcement rebar was not included in this analysis for conservatism.

Most of the outer nodes of the models used for analyses would be connected to the adjacent structures of building. Because these external constraints would be primarily resisting the compartment deformation in the tension-compression mode, their stiffness would be very large. For simplicity, therefore, the locations of the external nodes, which would be in fact connected to adjacent structures, are assumed to be fixed in translation.

3.3. Dose Assessment Methodology. During performance of D&D activities in Building 117/1 at Ignalina NPP the potential exposures to workers can occur due to radiological accidents or unusual conditions during handling, storage, and disposal of waste. The total committed effective dose for on-site worker was evaluated in those accident cases which would lead to the worst radiological consequences. As has been mentioned, the dominant initiating events for faults with radiological consequences occurring during the D&D of Building 117/1 are common industrial accidents: various load drops, HEPA filter mishandling, and ventilation loss.

In the event of an accident, the exposure of an individual may be external or internal and may be incurred by various pathways. External exposure may be due to direct irradiation from the source, airborne radionuclides in the air (immersion or exposure to an overhead plume), and radionuclides deposited onto the ground (groundshine) and onto person's clothing and skin. Internal exposure either results from the inhalation of radioactive material directly from a plume or resuspended from contaminated surfaces, from the ingestion of contaminated food and water or through contaminated wounds.

The importance of exposure pathways depends on the composition of the release, chemical and physical properties of the released radionuclides, and exposure duration. Cloudshine as well as inhalation plays a role only during the passing of the cloud. Cloudshine has a minor importance compared to inhalation and groundshine [8]. The importance of groundshine rises with exposure duration as after some days it becomes the predominant pathway. In contrast, resuspension and skin contamination play a minor role.

The total effective dose E_t can be calculated by taking into account all dominant routes by which individuals are exposed to radiological materials in an accident:

$$E_t = E_{\text{inh}} + E_{\text{cloud}} + E_{\text{wnd}}. \quad (1)$$

The ingestion pathway was not taken into consideration because it is assumed that the workers are trained to evacuate quickly after the incident which initiates the spread of airborne contamination, whereas the consumption of food or water during that time is not credible. The groundshine would be neglected for short exposure time (1 hour), in comparison to inhalation pathway [8]. The contamination of wounds was foreseen in the case of accidents when injures of workers are possible.

After the analysis of fault schedule, it was determined that workers can only be injured during various load drop events.

The first exposure pathway E_{inh} occurs when the operator is directly immersed in a radioactive cloud or plume and inhales airborne contamination. The detailed content of such a plume will depend on the source involved and conditions of the incident.

The potential inhalation dose E_{inh} to a worker inside the building [9] was calculated as follows:

$$E_{\text{inh}} = \text{MAR} * \text{ARF} * \text{RF} * C * \text{BR} * \text{DCF}_{\text{inh}}. \quad (2)$$

The second pathway E_{cloud} is a direct external exposure to a cloud of radioactive material.

To determine the external doses from the activities in the cloud to a worker the following equation was used:

$$E_{\text{cloud}} = \text{MAR} * \text{ARF} * C * \text{DCF}_{\text{cloud}}. \quad (3)$$

Since no appropriate wound model was available, conclusions concerning wound uptake was based on contamination injection directly into blood stream during a wounding incident and was only suitable for the purposes of conservative assessment. To determine the committed dose E_{wnd} due to contaminated wounds of a worker, the following equation was used:

$$E_{\text{wnd}} = \text{MAR} * \text{ARF} * C * V_d * T_{\text{wnd}} * \text{DCF}_{\text{wnd}}. \quad (4)$$

The wound transfer factor T_{wnd} can be broken down as follows [10]:

$$T_{\text{wnd}} = A_{\text{wnd}} * F_{\text{loose}} * F_{\text{clothing}} * F_{\text{absorb}}. \quad (5)$$

For the mechanisms that continuously act to suspend radionuclides (e.g., aerodynamic entrainment/resuspension), the activity release rate and the activity release time (Δt) are required to estimate the potential airborne release fraction from the postulated event conditions. Generally, ARRs are based on the measurements over some extended period to

encompass the majority of release situations for a particular mechanism. The ARF for continuous release was calculated as follows:

$$\mathrm{ARF} = \mathrm{ARR} * \Delta t. \quad (6)$$

The ARF, ARR, and RF parameters are dependent on accident scenarios and their values are based on the recommendations of the U.S. Department of Energy Handbook [11] and on Sellafield data [12] in some cases, for example, cutting release fractions.

The values 7.2 sec/m^3 and 19.0 sec/m^3 of the diffusion factor for 5 min and 1 hour exposure times were determined according to Sellafield Ltd cloud expansion methodology. According to this method, an instantaneous release into volume of air surrounding the operator for a certain period of time was assumed. The so-called diffusion factor is merely a way of saying that the dose to a worker is a direct function of the occupancy time and inverse function of the volume occupied by the released inventory of activity.

The breathing rate BR used for consequence assessment was $3.33E-04$ m^3/sec and corresponds to the light activity breathing rate for adults [13].

Inhalation dose factors $\mathrm{DCF}_{\mathrm{inh}}$ for an AMAD of 5 μm were taken from the Lithuanian hygienic norm HN 73:2001 [6] in accordance with the European [14] and international regulations [15]. AMAD of 5 μm is considered to be the most appropriate default particle size for radionuclides in the workplace [16]. External dose factors for dose estimation from cloud immersion $\mathrm{DCF}_{\mathrm{cloud}}$ were taken from Federal Guidance Report No. 12 [17] whereas wound committed dose factors $\mathrm{DCF}_{\mathrm{wnd}}$ were obtained from UKAEA Safety Assessment Handbook [18].

4. Results

4.1. Analysis Results of the Structural Integrity Analysis

4.1.1. Drop Analysis Results of ECCS Vessel Ring from High Height. The part of the compartment of ECCS from level −3.60 m to level 0.00 m was selected for structural integrity analysis of the compartment structures in case of the dropping of steel parts. The impacted slab has thickness of 300 mm. Reinforced concrete slab is laid on reinforced concrete beams with cross-section of 600 × 500 mm which are supported by reinforced concrete columns with cross-section of 500 × 500 mm. Steel I-beams of ECCS vessel support are installed on the top of the impacted slab. The I-beams have height 400 mm and width −280 mm and are strengthened by webbings with step 300–380 mm. I-beams are anchored to slab. The cross-section view of impacted slab is presented in Figure 5.

The analytical model of the compartment of ECCS prepared for analysis is presented in Figure 6.

Regarding material properties, the model to be analyzed is constructed from two materials: the I-beams are made from steel and the compartment walls are made from reinforced concrete. The mechanical properties (Norms and Rules) of the concrete and steel are summarized in Table 1.

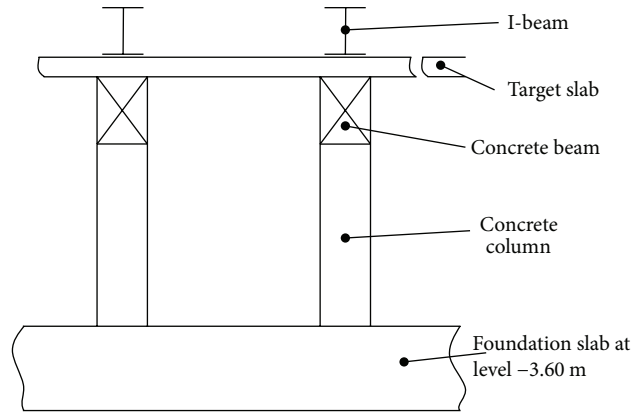

Figure 5: Cross-section of target slab bearing structures.

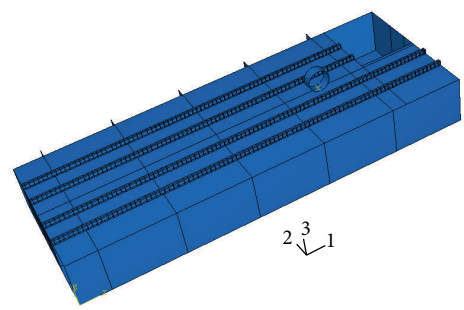

Figure 6: General view of model for slab strength evaluation.

Table 1: Material properties of concrete and I-beam steel.

	T, °C	E, MPa	ν	σ_Y, MPa	σ_U, MPa
Concrete	20	2.70×10^4	0.2	1.5	17
Steel	20	2.01×10^5	0.3	353	598

The impact load was calculated and presented in Section 3.2, Figure 3. This load was used in this analysis. The loads as from dead weight of emergency core cooling system vessels are included in the structural integrity analysis.

The structural integrity of the compartment of ECCS in case of dropping of the removed 3.2 ton steel ring of the vessel of the emergency core cooling system from 16-meter height to slab was carried out. The stresses distributions in the slab with I-beam at level 0.00 m are presented in Figure 7. The maximum stresses are located in I-beam near impacted area with maximum value of 177 MPa (Figure 7). Obtained values of stresses are below yield stresses of I-beam steel (Table 1, 353 MPa). The stresses distributions in concrete of this slab without I-beam are presented in Figure 8. The maximum stresses are located in the impacted area with a maximum value of 72.5 MPa. The maximum stresses in the supporting columns of the slab at level 0.00 m are located near the impacted area of the slab with a maximum value of 40 MPa (Figure 9).

The strength of concrete was exceeded in the slab at level 0.00 mm and supporting columns of this slab. According to

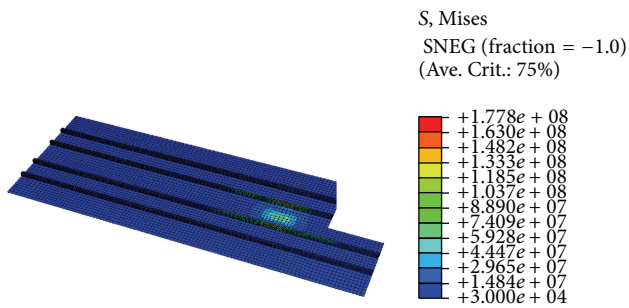

Figure 7: The von Mises stress (Pa) distribution in the slab and I-beam at level.

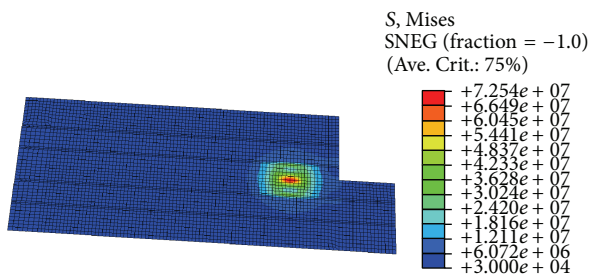

Figure 8: The von Mises stress (Pa) distribution in the slab at level 0.00 m.

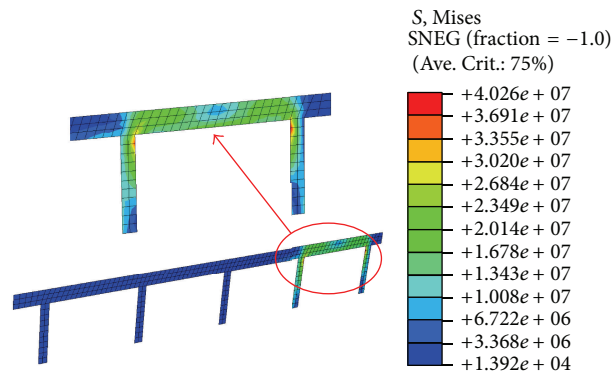

Figure 9: The von Mises stress (Pa) distribution in the supporting columns and girders.

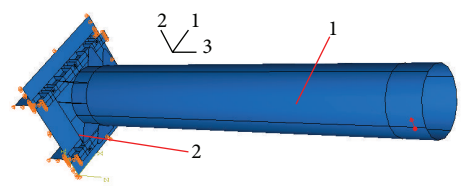

Figure 10: The model for finite element analysis of the ECCS vessel support (vertical position in compartment).

these results it is possible to conclude that the impacted reinforced concrete slab at level 0.00 m and supporting columns of this compartment will experience cracking of concrete, but the structural integrity of these slab and columns will be maintained during impact of a cut ECCS vessel ring.

High level of stresses in slab, column, and girder in impact place is due to conservative assumption that falling object is not cut into parts. Such conservative assumption not only allows performing calculation faster but also increases impact force. Also worthy of note that metal floors at levels +7.20 m and +13.20 m were neglected in case of drop, but they also reduce the impact force. All concrete structures are modelled without reinforcing rebar. This simplification also increase stress value.

4.1.2. Analysis Results of the Mishandling Crane with Load during Transportation. The part of the compartment of ECCS from level −3.60 m to level 0.00 m and ECCS vessel was selected for structural integrity analysis of the compartment structures in case of the mishandling crane with load during transportation.

Top cut ECCS vessel (Figures 10 and 1), I-beam, and floor slab with girders as the bearing of the emergency core cooling system vessels (Figures 10 and 2) were included in the model. In the model included contact of I-beams with floor slab and bolt joints of ECCS support plate and I-beams are evaluated. The geometrical data of floor slab and I-beams are the same as presented in Section 4.1.1. The columns of the slab at level 0.00 m are not included in this model.

In the model applied loads are

(i) dead weight of modelled parts;

(ii) concentrated forces of mishandling of 3200 kg load, velocity 0.4 m/s.

Force from mishandling of load in directions X and Y was applied on 1 node of ECCS vessel top (Figure 10, red arrow). The impact direction is assumed to be perpendicular to the ECCS vessel longitudinal axis. Loads as a result of mishandling were calculated using simplified model with, respectively, mass and primary speed of impacting object (see Section 3.2, Figure 4). The static structural integrity analysis of ECCS vessel bearing was carried out. Material properties used in this analysis are described above (Table 1).

The structural integrity of the ECCS vessel support in case of the mishandling crane with load was carried out. The analysis results from mishandling of load in direction X were presented in this paper. The stresses distributions in the slab and girder at level 0.00 m are presented in Figure 11(a). The maximum stresses located in the boundary conditions apply area with a maximum value of 7 MPa. The static compressive strength limit for concrete is 17 MPa and for tension is 1.5 MPa. The compressive strength limit of concrete was not reached in girder and slab. According to these results it is possible to conclude that the impacted reinforced concrete girder at level 0.00 m experiences cracking of concrete in tension layers, but the structural integrity of these slab and girder will be maintained during mishandling of load in direction X.

The von Mises stress distribution in ECCS vessel support plate is presented in Figure 11(b). The maximum stresses are located in ECCS vessel support plate near outer bolts with maximum value of 420 MPa (Figure 11(a)).

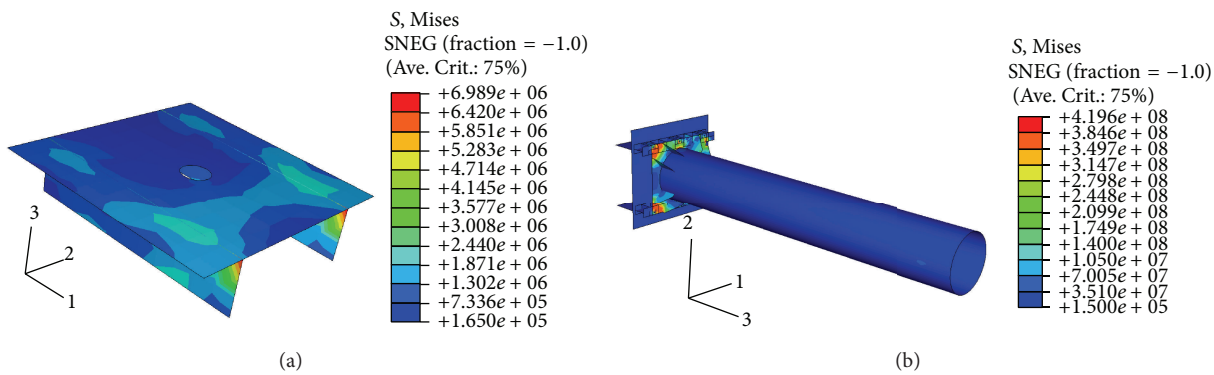

Figure 11: The von Mises stress (Pa) distribution in the model (vertical position in compartment).

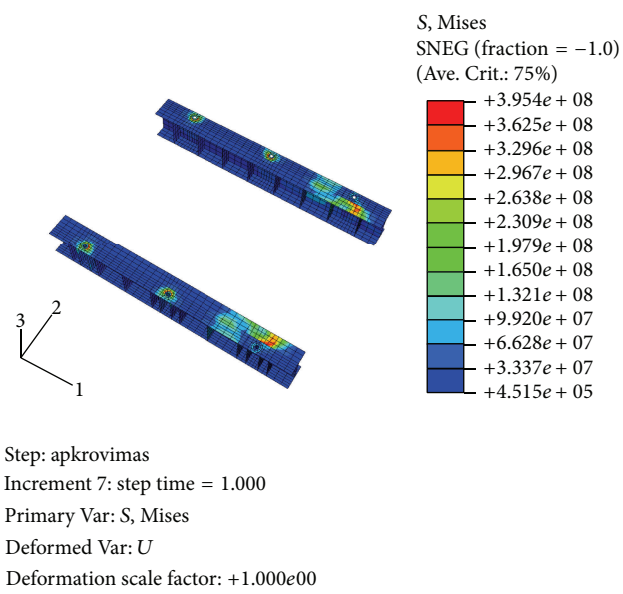

Figure 12: The von Mises stress (Pa) distribution in the I-beam in level 0.00 m.

The von Mises stress distribution in the I-beam at level 0.00 m is presented in Figure 12.

The maximum stresses are located in the inner webbings and flanges of I-beam near vessel support plate contact with maximum value of 395 MPa. The received stresses distribution in ECCS vessel support plate and in the I-beam at level 0.00 m are over yield stresses of steel but below ultimate stress (Table 1, 353, 598 MPa). According to this the plastic deformation of these structures can occur, but the structural integrity will be maintained during accident.

4.2. Radiological Consequences of ECCS Vessel Bottom Part Drop Accident. During the D&D of Building 117/1, the movement of heavy items (various cut segments of vessels or pipes) was performed by cranes and hoists from size reduction place to interim storage and later to the decontamination workshop. During the transportation the drop of heavy loads can potentially occur and result in the spread of airborne contamination.

Table 2: Source term for ECCS vessel bottom part [19].

Component	Activity, Bq/cm^2	Percentage
^{60}Co	37.52 Bq/cm^2	47%
^{137}Cs	42.91 Bq/cm^2	53%
Total	80.43 Bq/cm^2	100%

The bounding case was a drop of the bottom part of an ECCS vessel with all the additional contamination (slag) accumulated after completion of all cutting operations on that vessel. Taking into account weight and maximal possible drop height it will have the most significant consequences and will cover all events in this group (bounding consequence).

This was a conservative assumption because part of the activity during cutting will be released as fume and will be collected by ventilation in localised containment. In addition the procedures specify that the cutting debris will be removed into a catch pot placed at the bottom of the vessel prior to moving the bottom section (this would also catch a proportion of the slag and cutting debris dropping during cutting). Additionally it was assumed that no mitigating measures are taken, such as personal protective equipment, and the bottom section will be lifted without use of protective covers or bagging.

4.2.1. Source Term Determination. Estimation of source term for ECCS vessel bottom part including the worst case accumulated slag is presented in Table 2. Assumed ECCS vessel inner surface contamination is 80.43 Bq/cm^2. The inner surface activity of ECCS vessel is established conservatively according to the maximum value of the surface activity at the measurement points. The maximal measured activity in Building 117/1 room 101 at elevation 0.0 (ECCS vessels room) was 80.43 Bq/cm^2.

Total inner contaminated surface area of the ECCS vessel bottom part was 4.524 m^2; that is, the bottom surface area was 2.011 m^2 and ring's surface area (wall height: 0.5 m) is equal to 2.513 m^2.

Table 3: Source term for ECCS vessel bottom part and accumulated slag.

Radionuclides	Nuclide vector [20]	Contamination activity on ECCS vessel bottom part surface, Bq	Activity of accumulated slag, Bq
^{14}C	$2.40E-03$	$4.073E+03$	$1.563E+03$
^{54}Mn	0.12	$2.037E+05$	$7.813E+04$
^{55}Fe	9.5	$1.612E+07$	$6.185E+06$
^{59}Ni	$1.70E-04$	$2.885E+02$	$1.107E+02$
^{60}Co	1	$1.697E+06$	$6.511E+05$
^{63}Ni	0.13	$2.206E+05$	$8.464E+04$
^{65}Zn	$1.60E-04$	$2.716E+02$	$1.042E+02$
^{90}Sr	$1.30E-03$	$2.206E+03$	$8.464E+02$
^{93m}Nb	$1.80E-01$	$3.055E+05$	$1.172E+05$
^{94}Nb	$1.40E-03$	$2.376E+03$	$9.115E+02$
^{93}Zr	$1.40E-05$	$2.376E+01$	$9.115E+00$
^{99}Tc	$2.00E-05$	$3.395E+01$	$1.302E+01$
^{110m}Ag	$1.10E-03$	$1.867E+03$	$7.162E+02$
^{129}I	$3.20E-07$	$5.431E-01$	$2.084E-01$
^{134}Cs	$3.20E-02$	$5.431E+04$	$2.084E+04$
^{137}Cs	$6.90E-01$	$1.941E+06^{*}$	$1.175E+06^{*}$
^{234}U	$1.80E-07$	$3.055E-01$	$1.172E-01$
^{235}U	$3.50E-09$	$5.940E-03$	$2.279E-03$
^{238}U	$5.60E-08$	$9.505E-02$	$3.646E-02$
^{237}Np	$1.10E-08$	$1.867E-02$	$7.162E-03$
^{238}Pu	$6.60E-05$	$1.120E+02$	$4.297E+01$
^{239}Pu	$2.80E-05$	$4.752E+01$	$1.823E+01$
^{240}Pu	$4.80E-05$	$8.147E+01$	$3.125E+01$
^{241}Pu	$1.80E-03$	$3.055E+03$	$1.172E+03$
^{241}Am	$1.50E-04$	$2.546E+02$	$9.767E+01$
^{244}Cm	$1.30E-04$	$2.206E+02$	$8.464E+01$

* Assumed measured ^{137}Cs amount.

Contamination activity on the ECCS vessel bottom part surface (surface activity 80.43 Bq/cm^2):

$$\begin{aligned} &^{60}\text{Co} \quad 1.697E+06\,\text{Bq} \\ &^{137}\text{Cs} \quad 1.941E+06\,\text{Bq}. \end{aligned} \tag{7}$$

The concentration of other nuclides is defined applying nuclide vector with the key radionuclide ^{60}Co [20]. It is pessimistically assumed that all contamination will be in the form of slag/powder from the cut area and has accumulated in the bottom of the ECCS vessel. Activity of accumulated slag was estimated:

$$\begin{aligned} &^{60}\text{Co} \quad 6.511E+05\,\text{Bq} \\ &^{137}\text{Cs} \quad 1.175E+06\,\text{Bq}. \end{aligned} \tag{8}$$

The concentration of other nuclides is defined applying nuclide vector with the key radionuclide ^{60}Co [20]. The total source term used in the analysis for dropping the ECCS vessel bottom section with accumulated slag is presented in Table 3.

Airborne release fraction (ARF) for contamination on surface of ECCS vessel is $1E-02$ [21]. Airborne release fraction (ARF) for encrusted powders in case of dropping or mishandling is equal to $1E-3$ [21]. This ARF is for drops from 1 to 3 m. In case of drop from 16 metres, an increase factor of 10 was applied (this was applied for drop heights from 10 to 30 metres). Respirable fraction for contamination released from the surface of ECCS vessel was $1E-02$ [21]. ARF for accumulated slag from cutting of ECCS vessel is $4E-02$ (for drop height above 10 metres) [22] and RF from accumulated slag rendered airborne was $1E+00$ [22].

4.2.2. Dose Evaluation. According to the assumptions, listed above and summating the application of (2) for each nuclide, the internal effective dose for on-site worker was equal to 3.17 μSv for 5 min exposure and 8.38 μSv for 1 hour exposure. External dose due to exposure to the cloud of activity (3) was $5.13E-02$ μSv and $1.36E-01$ μSv for 5 min and 1 hour, respectively. In the short time that on-site worker would be exposed, the external dose from the active material deposited on the floor will be negligible, the deposition fraction from the airborne activity will also be very low as it will be entrained into the ventilation air flow. The maximum total effective unmitigated bounding case dose that on-site worker

could receive in the case of dropping the ECCS vessel bottom section was estimated to be 3.22 μSv for 5 min exposure and for an injury case 8.51 μSv (assuming exposure of 1 hour). These values are several orders of magnitude below the established radiation dose limit for an on-site worker dose of 16 mSv per year.

In view of the very low effective on-site worker dose and the fact that any released activity entrained by the building ventilation system will be subject to HEPA filtration, prior to release from the stack, it was judged that the public dose will be negligible.

Accidental events with low consequences (small doses) can be regarded as being within the range of normal operations doses. It should be noted that due to the conservative assumptions applied during the accident analysis, calculations for unmitigated dose, result can exceed the dose which actually be delivered in an accident by at least one order of magnitude than dose from normal D&D activities.

5. Summary and Conclusions

The assessment of the nonradiological and radiological consequences of the indicated most dangerous initiating event due to dismantling and decontamination activities at Ignalina Nuclear Power Plant was performed. The drop of heavy item was indicated as one of most dangerous initiating events for the discussed D&D project at Ignalina NPP related to the dismantling and decontamination of the equipment located in Building 117/1.

The effective doses received by on-site workers during decommissioning activities in Building 117/1 of Ignalina NPP Unit 1 due to accident circumstances were estimated. A simplified calculation model was applied to carry out a rapid estimation of potential radiological doses based on conservative assumptions. The assessment showed that the radiological consequences of the bounding case fault (drop of ECCS vessel ring) occurring as a result of the D&D activities are lower than the annual regulatory operator dose limit. The maximum total effective unmitigated bounding case dose that on-site worker could receive in the case of dropping the ECCS vessel bottom section was estimated to be 3.22 μSv for 5 min exposure and for an injury case 8.51 μSv (assuming exposure of 1 hour). These values are several orders of magnitude below the established radiation dose limit for an on-site worker dose of 16 mSv per year.

The structural integrity analysis of building structures in case of drop of heave parts of items or impact to structures at transportation during dismantling and decontamination activities in Building 117/1 of Ignalina NPP Unit 1 was performed. According to analysis results it is possible to conclude that the impacted reinforced concrete slab and the supporting columns will experience cracking of concrete in impact place. Damaged area of slab and the supporting columns are local and the structural integrity of the slab will be maintained in the case of drop of a cut ECCS vessel ring and impact to structures at transportation. Such damage is acceptable because the impacted slab does not perform function of confinement; therefore the detailed analysis of slab damage level is not needed. The analysis results show that the structural integrity of the building and supporting columns of building structures will be maintained, it will not collapse, and it will not influence the performance of dismantling and decontamination activities in the building.

Abbreviations

ALARA: As low as reasonable achievable
ARF: Airborne release fraction
ARR: Activity release rate
A_{wnd}: Wound contact area (m^2) (0.001 for a large wound)
BR: Breathing rate (m^3/sec)
C: Diffusion factor (sec/m^3)
D&D: Dismantling and decontamination
DCF_{cloud}: External immersion dose conversion factor (Sv/sec per Bq/m^3)
DCF_{inh}: Inhalation dose factor (Sv/Bq)
DCF_{wnd}: Wound committed dose factor (Sv/Bq)
ECCS: Emergency core cooling system
F_{absorb}: Absorption factor (for a wound deeper than 1 cm in case of delayed treatment – 0.13 for actinides and 1.0 for other nuclides)
$F_{clothing}$: Clothing protection factor (a 0.5 value is accepted for solid type of contamination)
F_{loose}: Loose contamination factor (a 0.1 value is accepted for loose surface contamination on the wounding object)
HAZOP: Hazard and operability studies
INPP: Ignalina Nuclear Power Plant
MAR: Material at risk (Bq)
MFU: Mobile filtering units
NPP: Nuclear Power Plant
PDP: Preliminary decommissioning plan
RAW: Radioactive waste
RF: Respirable fraction
SJR: Safety justification report
T_{wnd}: Wound transfer factor (m^2)
V_d: Deposition speed, $1.0E-2$ (for iodine) and $1.5E-3$ (for rest radionuclides) (m/s).

Conflict of Interests

The authors declare that there is no conflict of interests regarding the publication of this paper.

Acknowledgment

Dismantling and Decontamination project B9-0 at the Ignalina NPP referred to in the paper was funded by a grant from the EBRD-managed Ignalina International Decommissioning Support Fund (IIDSF).

References

[1] International Atomic Energy Agency, *Safety Assessment for the Decommissioning of Facilities Using Radioactive Material Safety Guide*, IAEA Series No. WS-G-5.2, IAEA, Vienna, Austria, 2009.

[2] E. Ušpuras, "State of the art of the Ignalina RBMK-1500 safety," *Science and Technology of Nuclear Installations*, vol. 2010, Article ID 102078, 11 pages, 2010.

[3] K. Jeong, D. Lee, K. Lee, and H. Lim, "A qualitative identification and analysis of hazards, risks and operating procedures for a decommissioning safety assessment of a nuclear research reactor," *Annals of Nuclear Energy*, vol. 35, no. 10, pp. 1954–1962, 2008.

[4] M. Hashemi-Tilehnoee, A. Pazirandeh, and S. Tashakor, "HAZOP-study on heavy water research reactor primary cooling system," *Annals of Nuclear Energy*, vol. 37, no. 3, pp. 428–433, 2010.

[5] A. Simonis, P. Poskas, A. Sirvydas, and D. Grigaliuniene, "Modeling of the radiation doses during dismantling of RBMK-1500 reactor pressurized tanks from emergency core cooling system," *Science and Technology of Nuclear Installations*, vol. 2013, Article ID 576432, 8 pages, 2013.

[6] Lithuanian Hygiene Standard, "Basic Standards of Radiation Protection: HN 73:2001," Approved by the Minister of Health Care Ordinance No. 663 of Dec 21, 2001, *State Journal*, 2002, No. 11-388; 2003, No. 90-4080.

[7] Abaqus/Standard User's Manual Volume 4, Version 6.4, 2003.

[8] B. R. Sehgal, *Nuclear Safety in Light Water Reactors*, Severe Accident Phenomenology, 2012.

[9] Application for License to Authorize Near-Surface Land Disposal of Low-Level Radioactive Waste, Appendix 8.0-5: Accident Analysis, Revision 12a, March 2007.

[10] B. W. Morris, W. P. Darby, and G. P. Jones, "Radiological consequence models for workers on a nuclear plant," AEA/CS/RNUP/47820021/Z/1 1, 1995.

[11] U.S. Department of Energy, "Airborne release fractions/rates and respirable fractions for non-reactor nuclear facilities," DOE Handbook DOE-HDBK-3010-94, U.S. Department of Energy, 1994.

[12] Releases Resulting from Size Reduction of Contaminated Metal Items // Sellafield Release Fraction Data Sheet Number 7.4 // Sheet Revision No. 1.3.

[13] IAEA, "Assessment of occupational exposure due to intakes of radionuclides," Safety Standards Series RS-G-1.2, IAEA, Vienna, Austria, 1999.

[14] European Commission and Community Radiation Protection Legislation, "Council Directive 96/29/Euratom of 13 May 1996 laying down Basic Safety Standards for the Protection of the Health of Workers and the General Public against the Dangers arising from Ionizing Radiation," 29.6.96; no. L 159.

[15] ICRP Publication 68, *Dose Coefficients for Intakes of Radionuclides by Workers*, International Commission on Radiological Protection, Elsevier Health Sciences, Amsterdam, The Netherlands, 1995.

[16] ICRP Publication 66, *Human Respiratory Tract Model for Radiological Protection*, Elsevier Science, Oxford, UK, 1994.

[17] Federal Radiation Protection Guidance, "External exposure to radionuclides in air, water, and soil," Federal Guidance Report 12, 1993.

[18] *Safety Assessment Handbook*, 2006, UKAEA/SAH/D9, Issue 3.

[19] "Appendix 6 to Technical Specification PTOts-1733-14," Radiological Survey of B117/1—Decontamination Tests Results 06.

[20] "Investigation of nuclide composition and development of activity estimation method for waste generated during decommissioning of the Building 117/1," Report Institute of Physics OWP10003, 2007.

[21] Releases from surfaces of contaminated solid wastes during mishandling or dropping, Sellafield Release Fraction Data Sheet no. 7.7, Sheet Revision no. 1.4.

[22] Airborne release from powders spilt from various heights, Sellafield Release Fraction Data Sheet Number 2.2, Sheet Revision No. 1.2.

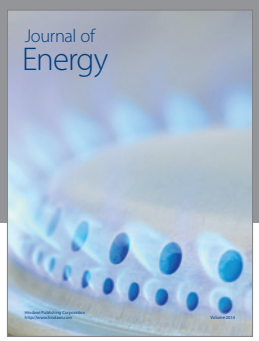

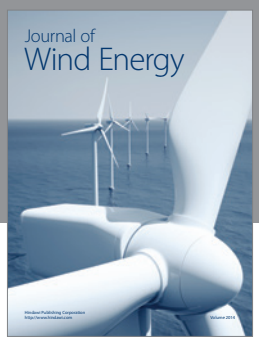

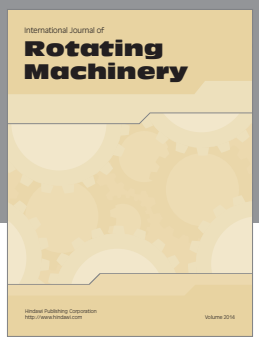

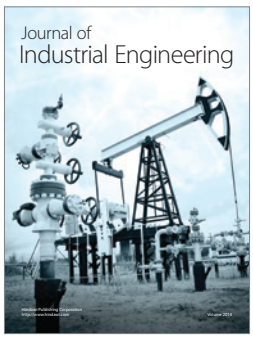

Hindawi

Submit your manuscripts at
http://www.hindawi.com