Sofia D. Panteliou
Department of Mechanical Engineering University of Patras Patras 26110, Greece
Department of Mechanical Engineering Washington University St. Louis, MO 63130, USA

Andrew D. Dimarogonas
Department of Mechanical Design Washington University St. Louis, MO 63130, USA

Thermodynamic Damping in Porous Materials with Spherical Cavities

When a material is subjected to an alternating stress field, there are temperature fluctuations throughout its volume due to the thermoelastic effect. The resulting irreversible heat conduction leads to entropy production that in turn is the cause of thermoelastic damping. An analytical investigation of the entropy produced during a vibration cycle due to the reciprocity of temperature rise and strain yielded the change of the material damping factor as a function of the porosity of the material. A homogeneous, isotropic, elastic bar of cylindrical shape is considered with uniformly distributed spherical cavities under alternating uniform axial stress. The analytical calculation of the dynamic characteristics of the porous structure yielded the damping factor of the bar and the material damping factor. Exsperimental results on porous metals are in good correlation with an analysis.

INTRODUCTION

It is well known that porosity in a material is related to the decrease in its strength. The evaluation of the effect of inclusions on the strength of the material, especially in relation to fatigue and brittle fracture, is a very important consideration in engineering design.

Damping is also a very important material property when dealing with vibrating structures from the point of view of vibration isolation in many applications: bearings, filters, aircraft parts, and generally structures made of porous materials. There are many damping mechanisms for a material (Lazan, 1968), most of which contribute significantly to the total damping over only a certain narrow range of frequency, temperature, or stress. Thermoelastic damping is due to the nonreversible heat conduction in the material.

Thermodynamic damping was first studied by Zener (1937), for transverse vibrations of a homogeneous Euler–Bernoulli beam. The case of a general homogeneous medium was investigated by Alblas (1961, 1981), Biot (1956), Deresiewicz (1957), Gillis (1968), and Lucke (1956). Homogeneous plates, shells, and Timoshenko beams were investigated by Lee (1985), Shieh (1971, 1975, 1979), Tasi (1963), and Tasi and Herrmann (1964). The connection between the second law of thermodynamics and thermodynamic damping was also discussed by Goodman et al. (1962) and

Received 13 June 1996; Revised 29 April 1997.
Shock and Vibration, Vol. 4, No. 4, pp. 261–268 (1997)
ISSN 1070-9622/97/$8.00

Landau and Lifshitz (1986). Armstrong (1984) calculated thermodynamic damping of a 1-dimensional composite consisting of successive slabs assuming identical thermal conductivity and specific heat for all slabs. Kinra and Milligan (1994) presented a general methodology for calculating thermodynamic damping in homogeneous or composite materials. Milligan and Kinra (1993a) extended the calculation to a single linear inclusion in an unbounded matrix. The case of an Euler–Bernoulli beam was examined by Bishop and Kinra (1992), who also Bishop and Kinra (1993a) investigated the thermodynamic damping of a laminated beam in flexure and extension. They (Bishop and Kinra, 1993b) calculated the thermodynamic damping of an N-layer metal matrix composite in a Cartesian, cylindrical, and spherical coordinate system with perfect or imperfect thermal interfaces. Milligan and Kinra (1993b) calculated the thermodynamic damping of a fiber reinforced metal–matrix composite.

ANALYTICAL MODEL

The thermomechanical behavior of a linear, isotropic, homogeneous thermoelastic medium is described by the following equations. The first law of thermodynamics (Zemanski and Dittman, 1981) is

$$\rho \partial u/\partial t = \sigma_{ij} \partial e_{ij}/\partial t - q_{i,i}. \tag{1}$$

Newton's law of motion conservation of linear momentum (Frederick and Chang, 1972) is

$$\sigma_{ji,j} = \rho \partial^2 u_i/\partial t^2. \tag{2}$$

The kinematic equation of linear thermoelasticity-strain displacement relations (Nowacki, 1962) is

$$e_{ij} = 1/2\left(u_{i,j} + u_{j,i}\right). \tag{3}$$

The second law of thermodynamics (Zemanski and Dittman, 1981) is

$$\rho \partial s/\partial t + \left(q_i/T\right)_{,i} \geqslant 0. \tag{4}$$

Hooke's thermoelastic law (Nowacki, 1962) is

$$\begin{aligned}\sigma_{ij} &= E/(1+\nu)\left(e_{ij} + \nu/(1-2\nu)\right)e_{kk}\delta_{ij} \\ &\quad - E/(1-2\nu)\alpha_1 \delta_{ij}(T - T_0).\end{aligned} \tag{5}$$

The Fourier law of heat conduction (Ozisik and Necati, 1993) is

$$q_i = -kT_{,i}. \tag{6}$$

In Eqs. (1)–(6) σ_{ij} is the stress tensor, e_{ij} is the strain tensor, u_i is the displacement vector, ν is Poisson's ratio, E is Young's modulus, ρ is the density, s is the entropy produced per unit mass, T is the absolute temperature, T_0 is the thermodynamic equilibrium temperature, q_i is the heat flux vector, u is the internal energy per unit mass, δ_{ij} is the Kronecker delta, k is the thermal conductivity, α_1 is the coefficient of thermal expansion, and the indices i, j, k each have a value of 1,2,3.

From the above equations the relation between temperature and strain (Frederick and Chang, 1972) is

$$T_{,ii} - (\rho c/k)\partial T/\partial t = \left[E\alpha_1/k(1-2\nu)\right]T\partial e_{kk}/\partial t. \tag{7}$$

In this equation the term $(T\partial e_{kk}/\partial t)$ couples the temperature field with the mechanical field and leads to a nonlinear problem. One can replace T on the right side of Eq. (7) with the thermodynamic equilibrium temperature T_0, because the fluctuation in temperature caused by reasonable alternating stress levels is very small. This assumption linearizes the differential equation. Equation (7) shows that for an isotropic material (Bishop and Kinra, 1994)

$$\left(\partial T/\partial \sigma_{kk}\right)_s = -T\alpha_1/C, \tag{8}$$

where C is the specific heat per unit volume. Because the temperature and mechanical fields are coupled, inhomogeneities in stress and material properties result in inhomogeneities in temperature. Heat is conducted from the high temperature regions to the low temperature regions and, as consequence of the second law of thermodynamics, entropy is produced that is manifested as a conversion of useful mechanical energy into heat.

When the second law of thermodynamics is applied to heat conduction in solids, it results in the calculation of the flow of entropy produced per unit volume $\dot{s}_p = ds_p/dt$ due to irreversible heat conduction (Colleman and Mizel, 1964; Colleman and Noll, 1961):

$$\dot{s}_p = k/\left(\rho T_0^2\right)(\partial T/\partial r)^2. \tag{9}$$

The elastic energy W_{el} stored per unit volume and cycle of vibration is (Timoshenko and Goodier, 1951)

$$\begin{aligned}W_{\mathrm{el}} &= (1/2E)\left(\sigma_{rr}^2 + \sigma_{zz}^2 + \sigma_{\theta\theta}^2\right) \\ &\quad - (\nu/E)(\sigma_{rr}\sigma_{zz} + \sigma_{zz}\sigma_{\theta\theta} + \sigma_{\theta\theta}\sigma_{rr}).\end{aligned} \tag{10}$$

The entropy Δs produced per unit volume and cycle of vibration is

$$\Delta s = \oint_T \dot{s}_p \, dt, \tag{11}$$

where T_p is the period of vibration.

From the Gouy–Stodola theorem (Bejan, 1982; Gouy, 1889; Stodola, 1910) the mechanical energy $\dot{W}$ dissipated per unit volume and per unit time is

$$\dot{W} = \rho T_0 \dot{s}_p. \tag{12}$$

The mechanical energy ΔW dissipated per cycle of vibration in a medium of volume V is

$$\Delta W = \rho T_0 \int_V \Delta s \, dV. \tag{13}$$

Equation (13) relates the entropy produced in the material during one cycle of vibration to the elastic energy dissipated.

Finally, the *material damping factor (MDF)* γ is defined as the energy dissipated throughout the medium in one cycle, normalized in respect to the maximum elastic energy stored during that cycle (Dimarogonas, 1996):

$$\gamma = \Delta W / 4\pi \int_V W_{\mathrm{el}} \, dV. \tag{14}$$

The *modal damping factor* ζ is defined (Dimarogonas, 1996) as

$$\zeta = \sqrt{\left[\gamma^2(4+\gamma^2)\right]}. \tag{15}$$

Equations (1)–(15) show the relationship between the stress field and the material or the modal damping factor of the bar due to thermoelastic effect.

SPHERICAL CAVITY IN ISOTROPIC MEDIUM

It has been observed in problems of materials with cavities that qualitative results can be obtained by using simple geometries for which analytical solutions are possible. Such analysis yields adequate results for the effect of the concentration of the cavities, while it cannot account for the effect of their true shape.

To improve our understanding of the mechanism of energy conversion and the relation of the cyclic stresses to the vibration damping, the material cavity was modeled, as a first approximation, as a spherical cavity in the center of an elastic, isotropic, and homogeneous unbounded medium submitted to uniform tension of magnitude S at infinity in the z direction of a cylindrical coordinate system (r, z, θ). The normal stresses at any point at distance R from the origin are (Timoshenko and Goodier, 1951)

$$\sigma_{rr} = \sigma_r' + \sigma_r'' + \sigma_r''', \tag{16a}$$

$$\sigma_{zz} = \sigma_z' + \sigma_z'' + \sigma_z''' + S, \tag{16b}$$

$$\sigma_{\theta\theta} = \sigma_\theta' + \sigma_\theta'' + \sigma_\theta''', \tag{16c}$$

where

$$\sigma_r' = 3C/R^5\left(1 - 5\cos^2\psi - 5\sin^2\psi + 35\sin^2\psi\cos^2\psi\right), \tag{17a}$$

$$\sigma_z' = 3C/R^5\left(1 - 30\cos^2\psi + 35\cos^4\psi\right), \tag{17b}$$

$$\sigma_\theta' = 3C/R^5\left(1 - 5\cos^2\psi\right), \tag{17c}$$

$$\psi = \arctan(z/r), \tag{18}$$

$$\sigma_r'' = -A\partial/\partial z\left[(1-2\nu)z(r^2+z^2)^{-3/2} - 3r^2 z(r^2+z^2)^{-5/2}\right], \tag{19a}$$

$$\sigma_z'' = A\partial/\partial z\left[(1-2\nu)z(r^2+z^2)^{-3/2} - 3z^3(r^2+z^2)^{-5/2}\right], \tag{19b}$$

$$\sigma_\theta'' = -A\partial/\partial z\left[(1-2\nu)z(r^2+z^2)^{-3/2}\right], \tag{19c}$$

$$\sigma_r''' = \sigma_t \cos\psi, \tag{20a}$$

$$\sigma_z''' = \sigma_t \sin\psi, \tag{20b}$$

$$\sigma_\theta''' = \sigma_t, \tag{20c}$$

$$\sigma_t = -B/2/R^3, \tag{21}$$

and

$$A = 5SR_1^3/2/(7-5\nu), \quad B = S(1-5\nu)R_1^3/(7-5\nu), \quad C = SR_1^3/2/(7-5\nu). \tag{22}$$

Equations (19) yield

$$\sigma_r'' = -A\left\{(1-2\nu)(r^2+z^2)^{-3/2} - [3(1-2\nu)z^2 + 3r^2](r^2+z^2)^{-5/2} + 15r^2z^2(r^2+z^2)^{-7/2}\right\}, \tag{23a}$$

$$\sigma_z'' = A\left[(1-2\nu)(r^2+z^2)^{-3/2} + 6z^2(r^2+z^2)^{-5/2} - 15z^4(r^2+z^2)^{-7/2}\right], \tag{23b}$$

$$\sigma_\theta'' = A\left[3z^2(r^2+z^2)^{-5/2} - (r^2+z^2)^{-3/2}\right]. \tag{23c}$$

Then the hydrostatic stress is

$$\sigma_{kk} = \sigma_{rr} + \sigma_{zz} + \sigma_{\theta\theta}. \tag{24}$$

In the above equations, R_1 is the radius of the cavity. For a loading assumed to be timeharmonic, the

stress is harmonic $\sigma = \sigma_o e^{i\omega t}$ and the rate of heat $q(r, t)$ generated due to the thermoelastic effect is

$$q(r,t) = -\alpha_1 T_0(\partial\sigma_{kk}/\partial t) = -\alpha_1 T_0 i\omega e^{i\omega t}\sigma_{kko}, \quad (25)$$

where subscript o in the stresses is designated as amplitude, ω is the frequency of oscillation of the external load, and t is the time. Under this assumption the transient heat conduction equation with heat generation in cylindrical coordinates can be written in the form

$$\partial^2 T/\partial r^2 + 1/r\partial T/\partial r + \partial^2 T/\partial z^2 + q(r,t)/k = a_{\text{diff}}\partial T/\partial t, \quad (26)$$

where $q(r, t)$ is the rate of heat generation term, k is the thermal conductivity, and α_{diff} is the thermal diffusivity. Because σ_{kk} is time harmonic and linearity is assumed, the fluctuations in T will necessarily be time harmonic; therefore, T can be assumed to be

$$T(r,t) = T_m(r)e^{i\omega t}. \quad (27)$$

Equations (25), (26), and (27) yield

$$\partial^2 T_m/\partial r^2 + 1/r\partial T_m/\partial r + \partial^2 T_m/\partial z^2 - \alpha_1 T_0 i\omega e^{i\omega t}\sigma_{kk}/k = a_{\text{diff}}\partial T_m/\partial t. \quad (28)$$

Because T_m is a complex number, $T_m = \text{Re}\{T_m\} + i\,\text{Im}\{T_m\}$, Eq. (28) yields the following two equations:

$$\partial^2 \text{Re}(T_m)/\partial r^2 + 1/r\partial \text{Re}(T_m)/\partial r + \partial^2 \text{Re}(T_m)/\partial z^2 + \omega/a_{\text{diff}}\,\text{Im}(T_m) = 0, \quad (29)$$

$$\partial^2 \text{Im}(T_m)/\partial r^2 + 1/r\partial \text{Im}(T_m)/\partial r + \partial^2 \text{Im}(T_m)/\partial z^2 - \omega/a_{\text{diff}}\,\text{Re}(T_m) = \alpha_1 T_0\omega\sigma_{kk}/k. \quad (30)$$

The temperature field is derived as the solution of differential Eqs. (29) and (30) and the following boundary conditions:

$$\partial T/\partial r = 0, \quad \text{at } r = R_1, R_2,\ z = 0, H/2, \quad (31)$$

where R_2 is the outer radius of the cylinder and $H = 2R_2$ is the height of the cylinder.

It is assumed that the flow of heat from the solid toward the cavity is zero because the heat transfer from the solid to the cavity can be neglected due to the low thermal conductivity and the limited thermal capacity. The temperature field is computed as the solution of Eqs. (29) and (30) with the boundary conditions (31). This was done by replacing the system of Eqs. (29) and (30) by a system of finite difference equations and solving the resulting system of linear equations also using the boundary conditions.

The mechanical energy ΔW dissipated in the solid per cycle of vibration is derived from Eqs. (9), (11), and (13) and the temperatures are calculated from the solution of Eqs. (29)–(31). Because the temperatures $T_{i,j}$ have been computed by a finite difference method at a lattice of points (i, j), the integration is replaced with a summation, using the trapezoidal rule

$$\Delta W = k\pi T_p/2T_o\left[H/2/dr\sum_{i=1}^{n}(T_{i+1,j} - T_{i-1,j})^2 r_{i,j} + dr/dz\sum_{i=1}^{n}(T_{i,j+1} - T_{i,j-1})^2 r_{i,j}\right], \quad (32)$$

where $T_p = \omega/2\pi$, the period of vibration and dr, dz are the mesh spacings in the r, z axes.

Using the relationships among the invariants of the stress tensor, the energy of elastic deformation W_{el} stored per unit volume and cycle is derived from Eq. (10) as

$$W_{\text{el}} = (1/2E)\sigma_{kk}^2 - (1+\nu)/E(\sigma_{rr}\sigma_{zz} + \sigma_{zz}\sigma_{\theta\theta} + \sigma_{\theta\theta}\sigma_{rr}). \quad (33)$$

The total energy W_{el} of elastic deformation per cycle in the volume V of the solid is

$$W_{\text{el}} = \int_V W_{\text{el}}\,dV. \quad (34)$$

Knowing that the stress concentration diminishes as we move away from the spherical cavity, we can superpose the stress fields in a lattice of spherical cavities and integrate over the volume, thus deriving the damping factor γ from Eqs. (14) and (32)–(34).

A numerical application was performed for the following geometry of cavities and material properties for bars made out of 316L stainless steel:

1. cavity radius, $0.001 \leqslant R_1 \leqslant 0.00685$ m;
2. cavity spacing, $2R_2 = 0.0016$ m;
3. Young's modulus, $E = 2 \times 10^{11}$ Pa;
4. Poisson's ratio, $\nu = 0.3$;
5. density, $\rho = 7860$ kg/m^3;
6. coefficient of thermal expansion, $\alpha_1 = 27 \times 10^{-6}$ mm/°C;
7. thermal conductivity, $k = 45$ W/m°C;
8. specific heat, $C = 460$ J/kg K.

These calculations gave the followings stress values for the stress at infinity $S = 1$ N/m^2, $\nu = 0.3$, at point on the axis of r with coordinates $r = R_1$, $z = 0$, $\psi = \pi/2$, $\sigma_{rr} = 0.09$, $\sigma_{zz} = 2.045$, $\sigma_{\theta\theta} = 0.45$, and $\sigma_{kk} = 2.59$. The lattice spacing of the cavities

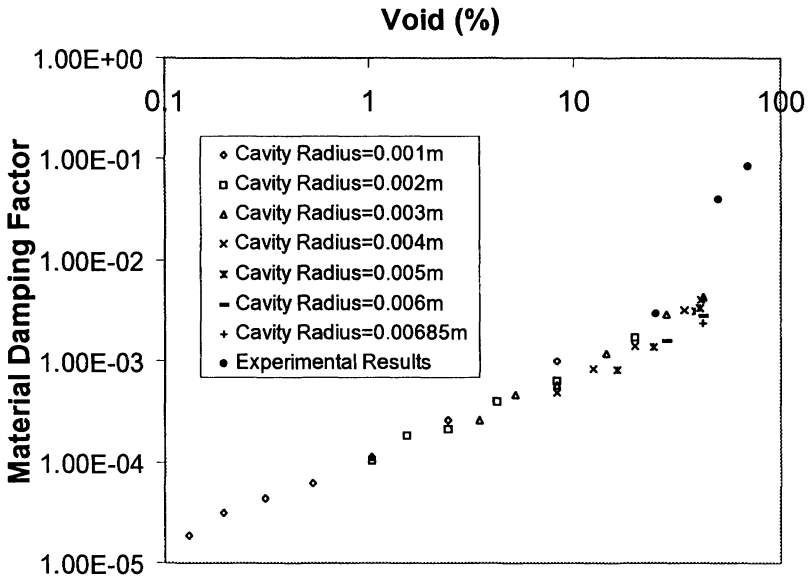

FIGURE 1 Material damping factor versus void (%). Analytical–experimental results.

Table 1. Bar Physical Characteristics and Measured Damping

No.	Porosity (%)	Length (m)	Width (m)	Height (m)	Young's Modulus ($N/m^2 \times 10^{11}$)	Density (kg/m^3)	Natural Frequency (Hz)	Measured Damping Factor
1	0	0.3048	0.031	0.003175	2.0	7860	28	
2	25	0.25	0.031	0.003175	0.517	5895	28	0.003
3	50	0.17	0.031	0.003175	0.158	3930	28	0.04
4	60	0.19	0.031	0.003175	0.151	3144	28	0.08

was assumed uniform, $H = 2R_2$. The material thermodynamic damping factor was plotted against different (%) void ratios, void $= (V_1/V_2) = 2/3(R_1/R_2)^3$, and the same load oscillation frequency ω (Fig. 1).

EXPERIMENTAL STUDY

On the basis of the analytical results shown in Fig. 1, it is apparent that the damping change due to the existence of porosity in the metal will be substantial. To test this hypothesis, changes in modal damping were evaluated experimentally. Tests have been performed on four metallic bars made out of 316L stainless steel with varying porosities. The porous material was a product of Mott Metallurgical Corporation with the commercial designation as Mott porous 316L SS sheets, series 1100 with Micron Grades 0.5, 40, and 100 for porosities of 25, 50, and 60%, respectively. The physical characteristics of the bars and the measured damping are shown in Table 1. The first natural frequency was calculated for bar 1. Then the lengths of bars 2–4 were selected to have the same first natural frequency. The experimental setup is shown in Fig. 2. Each bar had one fixed and one free end. An accelerometer of 1 g mass was fixed on the free end of the bar. The bar was set to free vibration from the initial position by hitting it with a hammer in the z direc-

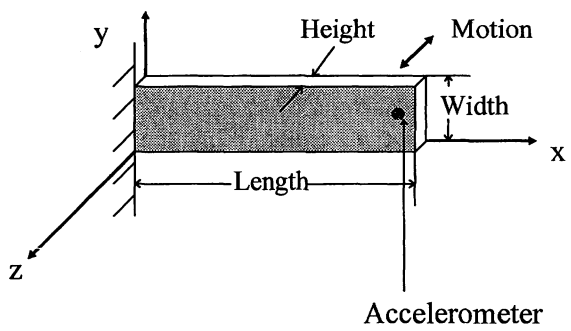

FIGURE 2 Experimental setup.

tion. The metal response was measured directly at the same position through the accelerometer. The output of the latter after amplification was introduced through a Data Acquisition Card (Omega OMB-DAQBOOK-100/-120/-200) to a PC and stored for further analysis. The sampling frequency was 3–5 kHz. The vibration modal damping factor ζ was obtained by applying the logarithmic decrement method (Dimarogonas, 1986). Ten measurements of damping were performed on each bar. Their average was used to yield the difference between the measured damping of the porous bar and the measured damping of the nonporous bar. This difference accounts for the thermoelastic damping due to the porosity only and was compared with the analytical results in the same sense (Fig. 1).

CONCLUSIONS

The thermodynamic theory of damping was used in the preceding analysis to find the additional material damping due to the material porosity. What is usually referred to as viscoelastic damping is not affected by the geometry of the viscoelastic solid because it is a material property. However, porosity and other stress raisers result in additional damping because of the nonreversible flow of heat from the areas of higher heat generation to the ones of lower heat generation. This phenomenon is due to the reciprocity between temperature rise and strain, usually encountered as strain due to temperature change. Because the inverse is true, namely that strain causes an increase in material temperature, there will be heat flow from areas of high strain and temperature to surrounding areas of lower strain and temperature. If the stress field is time harmonic, which is typical in the case of a vibrating body, there is a continuous source of heat that flows irreversibly and entropy is produced. The result is a continuous conversion of mechanical energy into heat that appears macroscopically as increased material damping.

Because our analysis and experiments are limited to elastic strains and relatively low frequencies, the temperatures developed are very small, probably nonmeasurable in many cases, but sufficient to produce a substantial change in the apparent material damping, that is, the material damping factor that is measured with vibration testing. While the microscopic MDF does not change, the apparent MDF depends on the porosity; thus, it becomes a material *and* a system property.

In the presence of material discontinuities stress analysis presents insurmountable difficulties and only very simple cases admit analytical or approximate analytical solutions. Numerical methods could be used, in principle, because pososity behaves well as compared with discontinuities like cracks. With the large number of cavities usually found in porous materials, such an approach would be of very substantial complexity and of very questionable validity. Thus, the approach used was to employ solutions for the infinite solid with a spherical cavity and constant hoop stress in one direction only at infinity and a regular lattice of equidistant spherical cavities in a rectangular arrangement. Because the additional damping is due to the stress concentration at the spherical surface, the assumption was made that we were interested in small cavities only, as compared with the cavity spacing; thus, the effect of the stress at one cavity upon the stress in the vicinity of another cavity could be neglected. Of course, with the stress solution for a rectangular lattice of spherical cavities, this assumption does not need to be made.

For the solution of the heat conduction problem, one can consider only a rectangular parallelepiped with a central spherical cavity and appropriate symmetric boundary conditions on the parallelepiped (or cube for equal lattice spacing along the Cartesian coordinates). In principle, an analytical solution in the form of a multiple infinite summation of a series is possible; but it is again of high complexity and questionable convergence and numerical efficiency. Thus, a finite difference scheme was used to solve the heat conduction equation along well-known lines.

From there numerical integrations of the entropy flow and the elastic strain energy were performed and the apparent MDF was computed. Computations were performed for different diameters of the spherical cavities while keeping the lattice spacing constant, thus changing the void ratio, defined as the ratio of the total volume of the cavities divided by the total volume of the solid.

The stress field about a spherical cavity in the elastic space with constant stress in one direction at infinity does not depend on the cavity diameter: for a very small void ratio one would expect very little increase in the apparent damping due to the cavities. It is the interaction, less from stress and more from thermal, that causes the apparent material damping factor to increase substantially with the void ratio. Thus, in Fig. 1 we observe a nearly linear relationship between the apparent material damping factor and void ratio. We also observe an increasing numerical error in the form of scatter of the numerical results for higher voids.

We did not find a material that conforms exactly with the model we used in the analysis. The commercially available material we found had nearly spherical cavities but not in regular but rather random spacing. Moreover, some cavities were connected but others were of elliptical shape. Therefore, we would expect the experimental results to show greater damping

as compared with the analytical. On the other hand, because the stress concentration is the same for spherical cavities regardless of size, the damping factor of the experiments and analysis should not differ appreciably if the majority of the cavities are spherical and the interaction of the stress fields about each cavity is not substantial. This proved to be the case and the analytical results do not differ appreciably, given the extent of the simplifying assumptions from the experimental ones (Fig. 1). Moreover, only materials with three different (and rather high) values of void ratio were available: 25, 50, and 60%. Above the 40% void ratio the analysis is problematic because the spherical cavities come very close to one another; in addition to the questionable validity of our assumptions, mainly the lack of interaction of the stress fields about the cavities, the numerical solution seems to be progressively more inaccurate and numerically unstable. However, superposition of the analytical and experimental results in Fig. 1 showed that the latter agree with the analytical and numerical results for lower values of the void but they become higher for higher void ratios. Perhaps this is due to the increased stress concentration factor because the cavities are not perfectly spherical or the interaction of the stress fields, as discussed above. Further work will clarify this point in the future.

This analysis can be used in a number of engineering problems:

1. as a continuous quality control tool for the production of ceramics, glass, and similar materials whose quality is diminished with even a small porosity;
2. as a design tool for the increasing use of porous materials for reduction of the structure-borne noise in automotive, aircraft, and other applications; and
3. in the biomedical field as diagnostic and monitoring tools for osteoporosis and other conditions of bone loss in the form of increasing porosity.

REFERENCES

Alblas, J., 1961, "On the General Theory of Thermo-Elastic Friction," *Applied Scientific Research*, Vol. 10, pp. 349–367.

Alblas, J., 1981, "A Note on the Theory of Thermoelastic Damping," *Journal of Thermal Stresses*, Vol. 4, pp. 333–355.

Armstrong, B., 1984, "Models for Thermoelastic Attenuation of Waves in Heterogenous Solids," *Geophysics*, Vol. 49, No. 7, pp. 1032–1040.

Baker, L. G., 1939, "Mathematical-Machine Determination of the Vibration of Accelerated Unbalanced Rotor," *J. of Appl. Mech.*, Vol. A6, pp. 145–150.

Bejan, A., 1982, *Entropy Generation Through Heat and Fluid Flow*, Wiley, New York.

Biot, M., 1956, *Journal of Applied Physics*, Vol. 27, No. 3, pp. 240–253.

Bishop, J., and Kinra, V., 1992, "Some Improvements in the Flexural Damping Measurement Technique," in V. K. Kinra and A. Wolfenden, *M^3D: Mechanics and Mechanisms of Material Damping, ASTM STP 1169*, American Society for Testing and Materials, Philadelphia, PA, pp. 457–470.

Bishop, J., and Kinra, V., 1993a, "Thermoelastic Damping of a Laminated Beam in Flexure and Extension," *Journal of Reinforced Plastics and Composites*, Vol. 12, pp. 210–226.

Bishop, J., and Kinra, V., 1993b, "Elastothermodynamic Damping of Metal–Matrix Composites," in H. J. Richter, *Thermodynamics and the Design and Improvement of Energy Systems, Proceedings of the 1993 Winter Annual Meeting*, pp. 127–138.

Bishop, J. E., and Kinra, V. K., 1994, "Elastothermodynamic Damping in Particle-Reinforced Metal–Matrix Composites," *Thermodynamics and the Design, Analysis, and Improvement of Energy Systems*, Vol. 33.

Coleman, B. D., and Mizel, V. J., 1964, "Existence of Caloric Equations of State Thermodynamics," *Journal of Chemistry and Physics*, Vol. 40, pp. 1116–1125.

Coleman, B. D., and Noll, W., 1961, "Foundations of Linear Viscoelasticity," *Review of Modern Physics*, Vol. 33, pp. 239–249.

Deresiewitcz, H., 1957, "Plane Waves in a Thermoelastic Solid," *Journal of the Acoustical Society of America*, Vol. 29, No. 2, pp. 204–209.

Dimarogonas, A. D., 1996, *Vibration for Engineers*, 2nd ed., Prentice–Hall, Englewood Cliffs, NJ.

Frederick, D., and Chang, T. S., 1972, *Continuum Mechanics*, Scientific Publishers, Cambridge, MA, p. 169.

Gillis, W., 1968, "Damping of Thermoelastic Structures," Technical Memorandum X-53722, George C. Marshall Space Flight Center, Orbital Mechanics Section.

Goodman, L., Chang, C., and Robinson, A., 1962, "Thermoelastic Damping," Technical Documentary Report No. ASD-TDR-62-1031 Wright-Patterson Air Force Base, Ohio.

Gouy, M., 1889, "Sur l'Energie Utilisable," *Journal of Physics*, Vol. 8, p. 501.

Henning, G., Schmitdt, B., and Wedlich, Th., 1967, "Erzwungene Schwingungen beim Rezonanzdurchgang," VDI-Bericht 113, pp. 41–46.

John, V., 1992, *Introduction to Engineering Materials*, Industrial Press, Inc., New York, pp. 459–460.

Kinra, V., and Milligan, K., 1994, "A Second Law Analysis of Thermoelastic Damping," *Journal of Applied Mechanics*, Vol. 61, No. 1, pp. 71–76.

Landau, L., and Lifshitz, E., 1986, *Theory of Elasticity*, Pergamon Press, New York.

Lazan, B. J., 1968, *Damping of Materials and Members in Structural Mechanics*, Pergamon Press, Oxford, UK.

Lee, U., 1985, "Thermoelastic and Electromagnetic Damping Analysis," *AIAA Journal*, Vol. 23, No. 11, pp. 1783–1790.

Lewis, F. M., 1932, "Vibration during Acceleration through the Critical Speed," *Transactions ASME*, Vol. 54, pp. 253–257.

Lucke, K., 1956, "Ultrasonic Attenuation Caused by Thermoelastic Heat Flow," *Journal of Applied Physics*, Vol. 27, No. 12, pp. 1433–1438.

Milligan, K., and Kinra, V., 1993a, "On the Damping of a One-Dimensional Inclusion in a Uniaxial Bar," *Mechanics Research Communications*.

Milligan, K., and Kinra, V., 1993b, "Elastothermodynamic Damping of Fiber-Reinforced Metal–Matrix Composites," in H. J. Richter, *Thermodynamics and the Design and Improvement of Energy Systems, Proceedings of the 1993 Winter Annual Meeting*, pp. 139–148.

Nowacki, W., 1962, *Thermoelasticity*, Pergamon Press, Oxford, UK.

Ozisik, M., and Necati, 1993, *Heat Conduction*, 2nd ed., Wiley, New York.

Shieh, R., 1971, "Thermoelastic Damping and Its Effect on Flutter of Stressed Panels Situated in a Supersonic Airflow," NASA TND-6448, NASA Langley Research Center, Hampton, VA.

Shieh, R., 1975, "Thermoelastic Vibration and Damping for Circular Timoshenko Beams," *ASME Journal of Applied Mechanics*, Vol. 42, No. 2, pp. 405–410.

Shieh, R., 1979, "Eigensolutions for Coupled Thermoelastic Vibrations Timoshenko Beams," *ASME Journal of Applied Mechanics*, Vol. 46, pp. 169–174.

Stodola, A., 1910, *Steam and Gas Turbines*, McGraw–Hill, New York.

Tasi, J., 1963, "Thermoelastic Dissipation in Vibrating Plates," *Journal of Applied Mechanics*, Vol. 30, pp. 562–567.

Tasi, J., and Herrmann, G., 1964, *Journal of the Acoustical Society of America*, Vol. 36, No. 1, pp. 100–110.

Timoshenko, S., and Goodier, J. N., 1951, *Theory of Elasticity*, 2nd ed., McGraw–Hill, New York.

Zemansky, M., and Dittman, R., 1981, *Heat and Thermodynamics*, 6th ed., McGraw–Hill, New York.

Zener, C., 1937, *Physical Review*, Vol. 52, pp. 230–235.