Hindawi Publishing Corporation
Shock and Vibration
Volume 2016, Article ID 2016432, 7 pages
http://dx.doi.org/10.1155/2016/2016432

Research Article

Online Identification and Verification of the Elastic Coupling Torsional Stiffness

Wanyou Li,[1] Zhuoye Chai,[1] Mengqi Wang,[1] Xinhuan Hu,[2] and Yibin Guo[1]

[1]*College of Power and Energy Engineering, Harbin Engineering University, Harbin 150001, China*
[2]*Technology Center, CSSC (China State Shipbuilding Corporation) Marine Power Co., Ltd., Zhenjiang 212002, China*

Correspondence should be addressed to Yibin Guo; guoyibin@hrbeu.edu.cn

Received 17 January 2016; Revised 25 March 2016; Accepted 10 April 2016

Academic Editor: Mickaël Lallart

Copyright © 2016 Wanyou Li et al. This is an open access article distributed under the Creative Commons Attribution License, which permits unrestricted use, distribution, and reproduction in any medium, provided the original work is properly cited.

To analyze the torsional vibration of a diesel engine shaft, the torsional stiffness of the flexible coupling is a key kinetic parameter. Since the material properties of the elastic element of the coupling might change after a long-time operation due to the severe working environment or improper use and the variation of such properties will change dynamic feature of the coupling, it will cause a relative large calculation error of torsional vibration to the shaft system. Moreover, the torsional stiffness of the elastic coupling is difficult to be determined, and it is inappropriate to measure this parameter by disassembling the power unit while it is under normal operation. To solve these problems, this paper comes up with a method which combines the torsional vibration test with the calculation of the diesel shafting and uses the inherent characteristics of shaft torsional vibration to identify the dynamic stiffness of the elastic coupling without disassembling the unit. Analysis results show that it is reasonable and feasible to identify the elastic coupling dynamic torsional stiffness with this method and the identified stiffness is accurate. Besides, this method provides a convenient and practical approach to examine the dynamic behavior of the long running elastic coupling.

1. Introduction

Due to the operation principle of a diesel engine as a complicated mechanical system, torsional vibration is inevitable. The classification society of all countries stipulates that the power of a diesel engine greater than 110 kw should be calculated and tested for torsional vibration of the shafting. During the calculation progress of the diesel shafting torsional vibration, the torsional stiffness of elastic coupling is an essential kinetic parameter. However, only the static stiffness of the couplings is provided when they are produced and the ratio of the dynamic stiffness to its static stiffness is usually 1.2. However, after the coupling is installed in the diesel shaft, the characteristics of the rubber parts of the coupling will be affected due to the high temperature under operation, aging, and alternating torque, and it can even lead to severe damage. As shown in Figure 1, erosion and microcracks occur on the surface of the rubber component of an elastic coupling, which will cause the coupling torsional stiffness to change inevitably. Hence, it is crucial to calculate the shafting torsional characteristics correctly and evaluate the stability of the shafting rationally by determining the torsional stiffness of the elastic coupling when it is operating.

Francis and Avdeev aimed to obtain the accurate characteristics of the torsional stiffness of the flexible couplings, because allowing for small amounts of misalignment of the coupling may lead to equipment failure. A full 3D parametric finite element model of the coupling was developed and it was validated experimentally [1]. But this method could only give the exact coupling stiffness before being settled on the mechanical apparatus. Once the characteristics changed, such method failed. Dr. Qiao at Shaanxi Blower Company indicated that in order to adjust the shaft torsional vibration one needed to change the most sensitive part of the whole system. And when the critical speed is required to be regulated through the shaft dynamic parameters, modifying the coupling parameters is expedient and effective [2]. The results were provided to support such statement by analyzing the modes. Dr. Lu at 711 Research Institute in Shanghai performed an experimental study on the static and dynamic torsional stiffness of the large torque coupling. From the research results, the dynamic stiffness is 7801.8 kNm/rad

Figure 1: Elastic coupling.

calculated by dynamic and static ratio of engineering prototype, but the static stiffness is actually measured to be 5892.6 kNm/rad [3]. One could find out that the dynamic and static ratio is 1.32 rather than 1.2 which is the empirical value. Dr. Tu investigated how the dynamic torsional stiffness of an elastic coupling was affected by different loads, temperature, and so forth. The research found that the dynamic and static ratio of the torsional stiffness for an elastic coupling was related to the test method and the ratio of different types of couplings also varied a lot; for instance, the dynamic and static ratio of stiffness of Type XL110 can be as high as 2.55 [4]. It demonstrated that the dynamic stiffness should have a deviation from the real value if it was calculated by experiential ratio value. It also came up with an identification method for dynamic stiffness. Dr. Li at Beijing Engineering University studied on how the torsional performance of the drive system was influenced by elastic coupling. It concluded that when the natural frequency changed due to the elastic coupling, the coupling happened in every mode of the torsional vibration system. So when the system had the torsional vibration, the coupling would be crushed at first by the vibration toque and even be damaged [5]. Actual torsional vibration problem may occur due to the variation of parameters, including stiffness which differs from the design [6]. Therefore, the coupling should be given more attention. In this paper, the state of the coupling will be monitored by the identification method for the elastic coupling stiffness and the change of the coupling parameters will be caught in time in order to prevent any accident.

The elastic component of a coupling is the critical part to determine its characteristic. It cannot keep the same material properties after a period of time of operation, which will affect its mechanical behavior and lead to a calculation error of the shafting torsional vibration feature. Under these circumstances, the torsional stiffness of the elastic coupling is required. Therefore disassembling the unit to measure the coupling parameters is necessary, but this will cease the normal operation. To solve this problem, this paper comes up with a methodology which combines the torsional vibration test with calculation of the diesel shafting and it can identify the dynamic stiffness of the elastic coupling online by the inherent characteristics of shaft torsional vibration without disassembling it. The approach has also been applied to a typical diesel engine shaft. Apart from the above, the identified results have been verified offline to be feasible using a dynamic performance test station for elastic coupling.

2. Diesel Propulsion Shafting Torsional Vibration Analysis

2.1. Torsional Vibration Calculation of the Diesel Propulsion Shafting. The diesel propulsion shafting which is studied in this paper includes diesel engine, elastic coupling, reduction gear box, propulsion shaft, and propeller. According to the principle that the kinetic energy and potential energy remain the same after the system is simplified [7], a multiple degrees-of-freedom lumped parameter model has been established. The propulsion shafting is simplified as an equivalent system consists of inelastic inertias and massless elastic shaft. The lumped model is shown in Figure 2.

According to the vibration principle and as the torsional model of diesel propulsion shafting which is shown in Figure 2, the differential equations for the free vibration can be expressed as follows:

$$[I]\left\{\ddot{\theta}\right\} + [K]\{\theta\} = \{0\}, \tag{1}$$

where $[I]$ is the equivalent inertia matrix of the system, $[K]$ is the equivalent stiffness matrix of the system, and $\{\theta\}$ is the equivalent torsional angle amplitudes corresponding to the inertias. For the equivalent inertia and stiffness matrix on the left hand side of (1), they represent the dynamical behaviors of the diesel propulsion system and they can be obtained from the space layout of every component (such as piston, crank, coupling, damping, gear box, and propeller). Since free vibration analysis of the propulsion system gives the inherent dynamic properties of such system, the external excitation will not have effects. The general solution of (1) is assumed as [8]

$$\{\theta\} = \{X\}\cos\omega_n t. \tag{2}$$

Substituting (2) into (1) gives

$$[K]\{X\} = \lambda[I]\{X\}, \tag{3}$$

where $\lambda = \omega_n^2$; as a result one can obtain

$$[I]^{-1}[K]\{X\} = \lambda\{X\}. \tag{4}$$

For (4), it is a standard eigenvalue problem [9], where $\{X\}$ is the eigenvector of the vibration system and ω_n is the natural frequency of the system. The equivalent simplified parameters of the diesel propulsion system which is shown in Figure 2 are tabulated in Table 1.

Based on the parameters shown in Table 1, the torsional vibration natural frequencies of the diesel engine propulsion

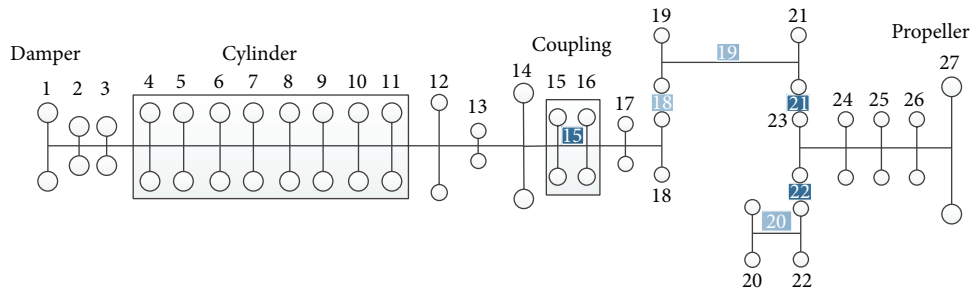

Figure 2: Lumped simplified model of a diesel propulsion shafting.

Table 1: Equivalent simplified parameters.

Number	Name	Inertia (kg·m^2)	Torsional stiffness (N·m/rad)
1	Damping R	70	7.60E + 06
2	Damping C	19	1.00E + 09
3	Flange	11.8	8.80E + 07
4	Piston 1	26.74	5.90E + 07
5	Piston 2	26.74	5.90E + 07
6	Piston 3	26.74	5.90E + 07
7	Piston 4	26.74	5.90E + 07
8	Piston 5	26.74	5.90E + 07
9	Piston 6	26.74	5.90E + 07
10	Piston 7	26.74	5.90E + 07
11	Piston 8	26.74	8.90E + 07
12	Cam	5.1	9.63E + 08
13	Flange	3.25	1.00E + 09
14	Flywheel	255	1.00E + 09
15	Elastic coupling_1	41.3	2.24E + 05
16	Elastic coupling_2	33.9	1.00E + 12
17	Gear_I1	8.101	4.06E + 07
18	Gear_I2_3	51.49	1.00E + 09
19	Gear_I4_1	3.375	1.57E + 07
20	Gear_I4_2	3.375	1.57E + 07
21	Gear_I5_1	3.185	1.00E + 09
22	Gear_I5_2	3.185	1.00E + 09
23	Gear_I6	698.4	1.47E + 08
24	Gear_I7	37.01	1.00E + 09
25	I_shafting	19.8	3.28E + 07
26	P_shafting	90	1.77E + 07
27	Propeller	2713	—

shaft can be calculated using the lumped parameter method which is widely accepted to ensure the accuracy of the simplified results. To make sure that the parameters are correct, the parameters used in this paper have been verified with those of MAN cooperation, which is guaranteed to be the accurate modeling parameters. The results are given in Table 2.

2.2. Torsional Vibration Test of the Diesel Propulsion Shafting. Nowadays, the typical torsional vibration test is achieved through the torsion vibration test on shafting using the pulse counting principle. The magnetic-electric sensor or encoder is used to pick up the torsional vibration signals. The signals are then collected by a noncontact torsional vibration meter [10] which can transform the vibration signal from time domain to frequency domain. Such test system is illustrated in Figure 3 [11]. In this paper, a flywheel is installed on the output terminal of the diesel engine propulsion system. Based on the test system shown in Figure 3, the magnetic-electric sensor installed at the radial direction of the flywheel is used to collect the torsional vibration information and maintains a distance for 1-2 mm from the top of the flywheel disc tooth, and the sensor outputs the square signals with amplitude of 5 V. The upper limit of the analysis bandwidth of the torsional vibration is 512 Hz according to the speed range of the diesel engine.

The natural frequency of the torsional vibration of the diesel engine is measured by increasing the speed continuously (from 450 r/min to 750 r/min within about 2 minutes with constant increment). By analyzing torsional angle amplitude at each harmonic order, the natural frequencies for the first four orders of shaft can be deduced and tabulated in Table 3.

2.3. Error Analysis. The calculation results in Section 2.1 are compared with the test results in Section 2.2 of the propulsion shafting, which is summarized in Table 4.

From Table 4, one can notice that the error of the 1st-order frequency is up to 28.71% and the error of the 2nd-order frequency reaches 5.07%, which cannot satisfy the ship specification. Additionally, the torsional stress cannot be obtained correctly and the safety of the shafting cannot be evaluated.

The vibration modes for the first two orders for this diesel shafting by torsional vibration calculation are presented in Figures 4 and 5, respectively. The node of the 1st vibration mode is between inertia 15 and inertia 16, which is illustrated in Figure 4 and such node is the position of elastic coupling. Similarly, one node of the 2nd-order vibration mode is at the same position. These phenomena illuminate that the elastic coupling has a significant influence on the primary two natural frequencies of the whole shafting. When torsional stiffness of the elastic coupling is as the value of the static stiffness 0.224 MNm/rad (as shown in Table 1), the errors between the calculation values and the test values of the primary two natural frequencies are large which indicate that it is irrational to use the static stiffness to calculate

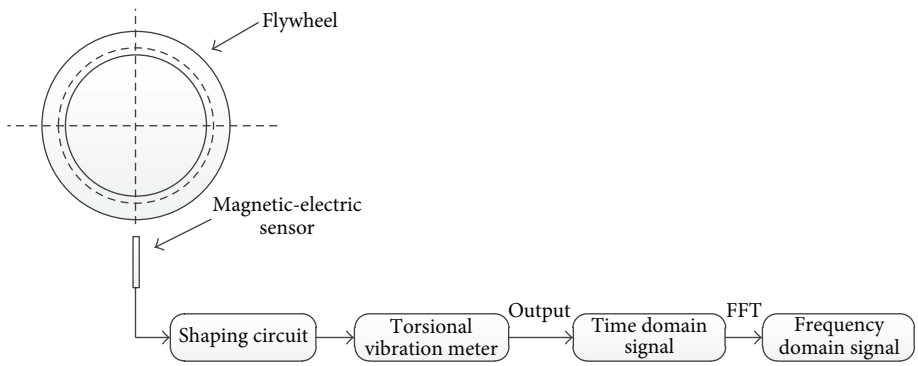

Figure 3: Typical torsional vibration test system.

Table 2: Natural frequency calculation results (primary 4 orders).

Order	Natural frequency (Hz)
1	5.29
2	14.00
3	37.03
4	69.44

Table 3: The test natural frequency values of the shafting.

Order	Test values (Hz)
1	6.81
2	14.71
3	36.55
4	68.75

Table 4: Natural frequencies compared between calculation results (using static stiffness) and test results.

Order	Calculation results (Hz)	Test results (Hz)	Error (%)
1	5.29	6.81	28.71%
2	14.00	14.71	5.07%
3	37.03	36.55	1.30%
4	69.44	68.75	1.00%

the natural characteristics of the diesel shafting. The ship criterions of all countries stipulate that the test result should be the standard once the calculation result is different from it and the theoretical model can be modified by the test results [12].

3. Online Identification of the Elastic Coupling Torsional Stiffness

3.1. Online Identification Process of the Torsional Stiffness. The torsional stiffness of an elastic coupling is a critical parameter for torsional vibration of a diesel engine propulsion shaft and should be tested before leaving the factory. However, the general test of the torsional stiffness only focuses on the STATIC torsional stiffness and puts no special attentions on the dynamic stiffness test and the dynamic stiffness is evaluated by the ratio between dynamic and static stiffness. In addition, after the coupling is used for a couple of periods, the material properties of the elastic component are easy to change. Hence, the dynamic behavior of the elastic coupling might alter during the operation process. Another problem

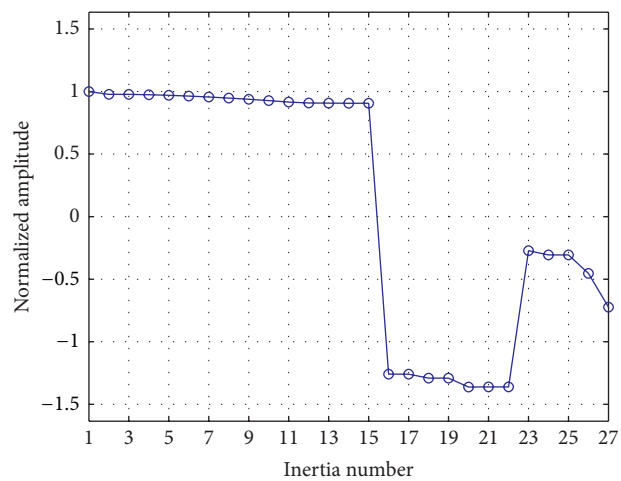

Figure 4: First-order vibration mode.

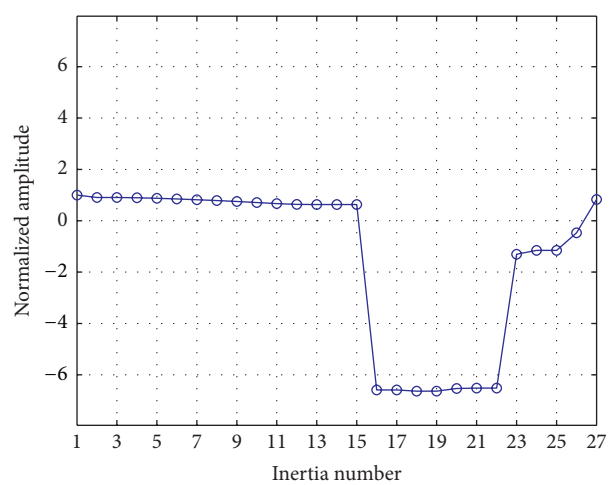

Figure 5: Second-order vibration mode.

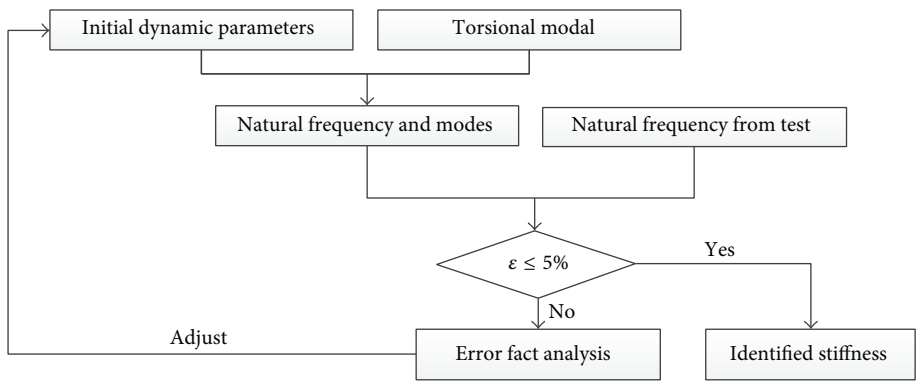

Figure 6: Stiffness identification process online.

is that once the coupling is settled in the unit, it is difficult to measure the parameters without dissembling the ship. According to the issue which is discussed in Section 2.3, the elastic coupling torsional stiffness parameter for computation might not be real. Therefore, the calculated results of the first two natural frequencies have large discrepancy. To remove this deficiency, this paper provides a methodology to online identify the dynamic torsional stiffness of the flexible coupling. It can not only identify the torsional stiffness conveniently but also keep the diesel set working as usual. The identification process is illustrated in Figure 6.

With the initial input for the shafting, the natural characteristics of the shaft torsional vibration can be calculated. Then the results are compared with the test data in order to determine whether the error is within the allowable range:

$$\varepsilon_i = \frac{\operatorname{abs}\left(f_i^c - f_i^m\right)}{f_i^m}, \qquad \varepsilon = \max\left\{\varepsilon_1, \varepsilon_2, \varepsilon_3, \ldots, \varepsilon_n\right\}, \tag{5}$$

where f_i^c is the ith order of natural frequency of the propulsion shafting calculated, f_i^m is the ith order of natural frequency of the propulsion shafting measured, ε_i is the ith natural frequency error of the measured and calculated one, and ε is the maximum natural frequency error of the propulsion shafting.

Once the maximum natural frequency error of the torsional vibration is less than 5%, the initial parameters do not need to be corrected. However, if the error is bigger than 5%, the natural frequencies and the mode of the system will be used to judge which output parameter effects the calculation results the most. As it can be seen from Section 2.3, the elastic coupling has a significant influence of the first two natural frequencies of the whole shafting. By adjusting this key parameter, the identification of elastic coupling stiffness has to be repeated until the errors are all less than 5%. Then the final stiffness is the one that is corresponding to the measured results and satisfies the calculation standard.

3.2. Identification Stiffness Analysis. Based on the identification method mentioned above, the natural frequencies, and the mode shape measured, the real dynamic stiffness value of the elastic coupling identified is 0.420 MNm/rad. This identified stiffness is used to recalculate the primary four orders of natural frequencies of the diesel propulsion shafting and the results are compared with the measured frequencies. The comparison results are shown as in Table 5.

Table 5: Natural frequencies compared between calculation results (using identified stiffness) and test results.

Order	Calculation results (Hz)	Test results (Hz)	Error (%)
1	6.79	6.81	0.22
2	14.89	14.76	0.88
3	37.10	36.67	1.17
4	69.46	68.33	1.66

From Table 5, one can notice that the maximum error is no more than 1.66% and the error of the 1st order of natural frequency is only 0.22%. All the errors satisfy the standard which is less than 5%.

It should be mentioned that other parameters, such as the torsional vibration damper, have also been checked to identify whether they can influence the natural frequencies of the shafting. The calculation results show that all other parameters are not sensitive to the primary two natural frequencies except the elastic coupling. Therefore, it is quite reasonable to identify the torsional stiffness of the elastic coupling with the approach discussed in this paper.

4. Validation of the Elastic Coupling Torsional Stiffness

4.1. Torsional Stiffness Testing System. Due to the hysteresis quality of the coupling elastic component, hysteresis loss will exist in a vibration circulation. Through specific measurement method and data processing system, the damping ellipse can be obtained to calculate the damping factor ψ, damping value X, and dynamic stiffness C_{dyn} [13]. The damping ellipse is shown in Figure 7.

In Figure 7, A_D is ellipse area = damping work, A_E is ΔOBC area = 1/4 of elastic work, T_ω is alternating torque, T_E is elastic torque, T_D is damping torque, and ϕ_ω is alternating torsional angle.

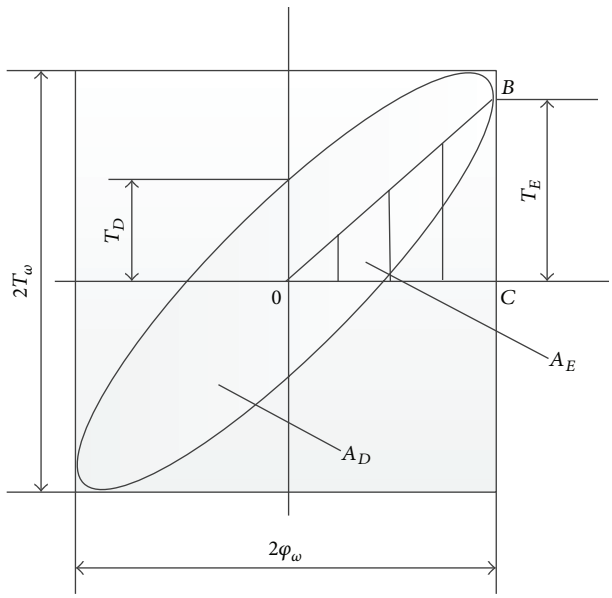

Figure 7: Damping ellipse.

The damping ratio ψ and damping value X can be calculated as

$$\psi = \frac{A_D}{A_E}, \qquad X = \frac{T_D}{T_E}. \tag{6}$$

As $B = 2A_D/(T_\omega \cdot \varphi_\omega)$, the dynamic stiffness can be determined with

$$C_{\text{dyn}} = \frac{T_E}{\varphi_\omega} = \frac{T_\omega}{\varphi_\omega\sqrt{1+X^2}} = \frac{T_\omega\sqrt{4\pi^2 - B^2}}{2\pi\varphi_\omega}. \tag{7}$$

From the equation it can be seen that once the alternating torque and torsional angle are measured and the damping ellipse is obtained, the torsional stiffness can be computed from the equation above.

To validate the accuracy of this identification method for the dynamic torsional stiffness, the elastic coupling was settled on a dynamic performance test unit to measure its dynamic torsional stiffness, as shown in Figure 8.

The maximum torsional torque of the test apparatus is 64 kNm and the total mass is 5800 kg. The right end of the coupling was connected to the test panel of the measurement apparatus with bolts and the left end of the coupling is applied with alternating torque by a hydraulic device. The relative angular displacement is measured by the angle encoder in order to calculate the dynamic torsional stiffness. This test method is simple, reliable, small energy consumption and is widely used for most torsional stiffness measurement apparatuses [4].

4.2. Test Results Comparison. According to the actual operating condition of the diesel propulsion shafting, the loaded torque is set for the dynamic test apparatus. The test dynamic torsional stiffness of the elastic coupling is shown in Figure 9, which is 442 kNm/rad.

Table 6: Comparison of the dynamic stiffness of the elastic coupling.

	Test dynamic stiffness (MNm/rad)	Identified dynamic stiffness (MNm/rad)	Error (%)
Elastic coupling	0.442	0.420	4.98

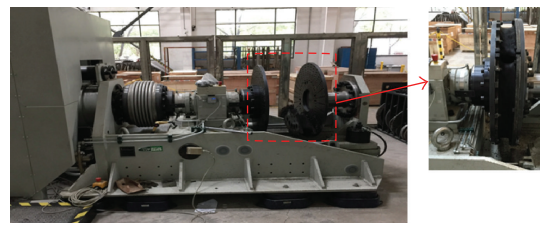

Figure 8: Elastic coupling dynamic stiffness measurement apparatus.

Comparing the two results of the identified stiffness which is suggested in this paper and the test result from the dynamic unit, the error is less than 5% which can be seen in Table 6, it indicates that this method is reasonable and feasible to identify the dynamic stiffness of the elastic coupling, and the identified results are accurate.

This paper rises up an identification analysis idea to verify the dynamic torsional stiffness of an elastic coupling without tearing the coupling down from the power plant and provides reliable parameters for analyzing the properties for the elastic coupling even for the whole shaft. Besides, as the rubber parts of the elastic coupling always suffer from high temperature, oil, and alternating torque, its properties are easy to deviate from the original one. Hence, this method is provided for online identifying the dynamic behavior of the elastic coupling conveniently during the long-term operation.

5. Conclusion

In this paper, it states that the elastic coupling stiffness is difficult to be obtained in the torsional vibration calculation of the diesel propulsion shafting. Such problem has been solved using the natural characteristics of the torsional vibration of the shafting to identify the dynamic stiffness of the elastic coupling. Also the solution is applied to a typical diesel propulsion shafting. Using this elastic coupling dynamic stiffness identified with such method to calculate the torsional vibration of the engine shafting, the theoretical calculated result of the natural frequency has an error less than 5% compared with the test on the ship, which satisfies the relative specifications. Verifying the stiffness identified offline with a dynamic performance test apparatus for elastic coupling, the test result has an error less than 5%, which indicates that it is reasonable and feasible to identify the elastic coupling dynamic torsional stiffness with this method and the identified stiffness is accurate. As a result, this method

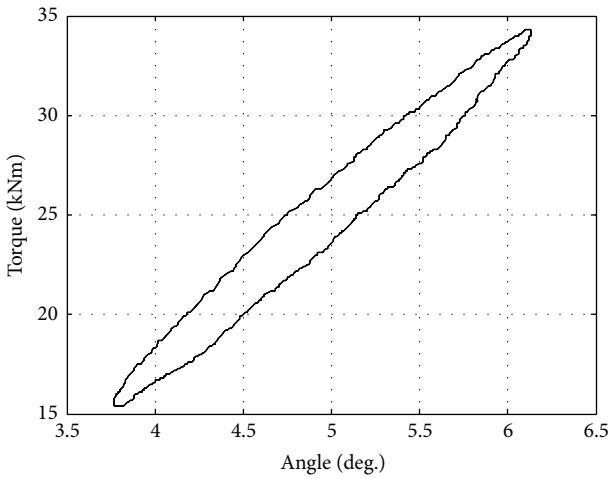

Frequency: 10.0 Hz
C_{dyn}: 442.09083022239565 kNm/rad
PSI: 1.1638425591565138 (—)

Figure 9: Dynamic stiffness curve of the elastic coupling.

provides a convenient and practical approach to examine the dynamic behavior of the elastic coupling online during a long-term operation.

Competing Interests

The authors declare that there is no conflict of interests regarding the publication of this paper.

Acknowledgments

The research work is supported by the National Natural Science Foundation of China (Grant no. 51375104), Heilongjiang Province Funds for Distinguished Young Scientists (Grant no. JC 201405), China Postdoctoral Science Foundation (Grant no. 2015M581433), and Postdoctoral Science Foundation of Heilongjiang Province (Grant no. LBH-Z15038).

References

[1] A. Francis and I. Avdeev, "Accurate characterization of torsional stiffness of flexible disk couplings," *Journal of Engineering for Gas Turbines and Power*, vol. 137, no. 8, Article ID 082504, 2015.

[2] S. N. Qiao, "Study on adjusting of torsional vibration in compressor shafting by coupling," *Fluent Mechanical*, vol. 37, no. 5, pp. 49–60, 2009.

[3] C. R. Lu, "Experimental investigation in a large-torque flexible coupling," *Diesel Engine*, vol. 5, pp. 38–43, 2002.

[4] W. L. Tu, "Dynamic performance test study on elastic coupling," *China Association for Science and Technology*, vol. 1, pp. 539–544, 1992.

[5] H. Y. Li, "Study on torsional vibration performance of vehicle powertrain affected by elastic coupling," *Mechanical Strength*, vol. 25, no. 6, pp. 596–603, 2003.

[6] H. S. Han, K. H. Lee, and S. H. Park, "Parametric study to identify the cause of high torsional vibration of the propulsion shaft in the ship," *Engineering Failure Analysis*, vol. 59, pp. 334–336, 2016.

[7] L. Murawski and A. Charchalis, "Simplified method of torsional vibration calculation of marine power transmission system," *Marine Structures*, vol. 39, pp. 335–349, 2014.

[8] C. F. Beards, *Structural Vibration: Analysis and Damping*, Halsted Press, 1996.

[9] M. Shao, F. H. da Jornada, C. Yang, J. Deslippe, and S. G. Louie, "Structure preserving parallel algorithms for solving the Bethe-Salpeter eigenvalue problem," *Linear Algebra and its Applications*, vol. 488, Article ID 13389, pp. 148–167, 2016.

[10] A. Maekawa and M. Noda, "Development of noncontact measurement methods using multiple laser displacement sensors for bending and torsional vibration stresses in piping systems," *International Journal of Pressure Vessels and Piping*, vol. 137, pp. 38–45, 2016.

[11] L. Xiang, S. Yang, and C. Gan, "Torsional vibration measurements on rotating shaft system using laser doppler vibrometer," *Optics and Lasers in Engineering*, vol. 50, no. 11, pp. 1596–1601, 2012.

[12] W. S. Hong, "Torsional vibration survey of marine diesel engine shaft," *Wuhan Shipbuilding*, vol. 2, pp. 98–107, 1979.

[13] M. Heribert, "Testing flexible coupling," *The Motor Ship*, vol. 64, pp. 63–65, 1983.

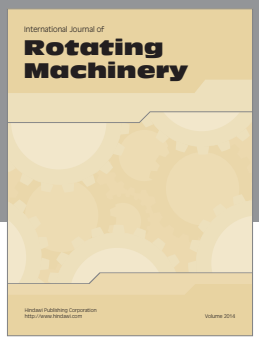

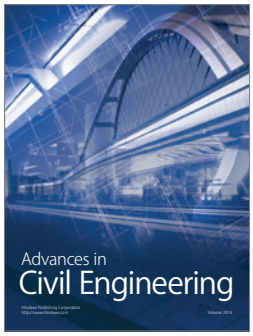

Hindawi

Submit your manuscripts at
http://www.hindawi.com