Hindawi
Shock and Vibration
Volume 2019, Article ID 6545980, 12 pages
https://doi.org/10.1155/2019/6545980

Research Article

Research on High-Power and High-Speed Hydraulic Impact Testing Machine for Mine Anti-Impact Support Equipment

Jie Wang and Jianzhuo Zhang

School of Mechanical Engineering, Liaoning Technical University, No. 45, Zhonghua Road, Xihe District, Fuxin 123000, China

Correspondence should be addressed to Jie Wang; sunny_jiewang@163.com

Received 18 February 2019; Revised 6 June 2019; Accepted 20 June 2019; Published 1 July 2019

Academic Editor: Roberto Nascimbene

Rock burst is one of the most serious disasters that can occur in mining. However, studies of mine disaster prevention and hydraulic support still face a lack of large scale high-speed and high-power impact loading test equipment for the simulation of rock bursts. Considering the coexistence of quasistatic loading, dynamic loading, and static-dynamic composite loading in rock bursts, an impact test machine was designed based on hydraulic loading to achieve the maximum impact force of 2000 kN and maximum impact velocity of 10 m/s to simulate the impact of actual rock bursts in this study. In the design process, the action principle and loading characteristics of the rock burst were first analyzed, and on this basis, the hydraulic loading system was designed using theoretical calculations as well as simulation. Requirements related to laboratory experiments were used to determine the technical parameters and structure of the test machine. The main frame of the test machine was designed according to the load requirements, and the dynamic characteristics of the main frame under the impact condition were analyzed. According to the results of the calculations and simulations, a prototype was manufactured, on which a no-loading impact test and crash box impact test were carried out. The test results validated the effectiveness of the test machine. The development of this impact test machine provides the necessary means for the research and development of anti-impact support equipment.

1. Introduction

Rock burst is one of the most serious disasters that can occur in coal mines. Recent years have seen a gradual increase in the exploitation of deep resources, and in the wake of this fact, the number of mines with rock burst characteristics have increased each year [1, 2]. In order to meet the support needs of mines that are susceptible to rock bursts, the development of energy absorbing support equipment with rigid-flexible coupling characteristics has become an important research area [3, 4]. At present, the main research methods used to address this issue are theoretical calculations and numerical simulations. Due to the lack of necessary test equipment, the practicality of in-depth experimental studies is severely limited. A rock burst is a sudden instability phenomenon caused by the superposition of static and dynamic loads [5–8]. In order to study the actual performance and support mechanism of the support device, it is necessary to develop an impact test device which can simulate the actual working conditions.

Considerable research has been carried out on impact test machines for different purposes, and several advances have been made in the working principle, model establishment, design method, and control theory of the test machine. For the impact testing of large specimens, the drop hammer or hydraulic loading method is usually adopted due to the large impact energy requirements [9–11]. For the high-speed impact of small parts, the Hopkinson pressure rod method is commonly used [12–15]. The impact load of the metal drop hammer impact tester or pendulum impact tester is determined by the mass and the height from which the hammer is released [9]. The greatest impact speed of the test machine described in the literature was 19.8 m/s, and the maximum mass of the hammer was 490 kg [10]. Such test machines can realize

large tonnage and rapid impact testing but cannot achieve static-dynamic composite loading [6–8]. Another group of researchers designed a performance test machine for test specimens whose buffering force is approximately proportional to the impact velocity. The test bed could realize a cushioning force of 21 kN at an impact velocity of 0.5 m/s, which was hydraulically driven to achieve rapid and continuous operation [16]. Zirong and others carried out research on a mine bolt/anchor impact tensile test machine that uses a symmetrical arrangement of hydraulic cylinders to stretch bolt. The maximum working pressure in the tensile test was up to 20 MPa, and the maximum tensile force was 230 kN [17]. Wang and others proposed a model of a fully hydraulic-driven heavy-duty ship equipment impact test system; the weight of the test specimen for this system can reach 5000 kg, and the maximum impact speed can reach 5 m/s [18]. Tengfei et al. studied the dynamic performance of a large-flow safety valve for hydraulic support, analyzed and compared the characteristics of the existing impact test machine, and pointed out that the fast loading system with an accumulator as the power source can achieve impact pressure of 5–25 ms [19]. Xu et al. designed a high-pressure and large-flow safety valve test device with an accumulator as the power source for safety valves with an instantaneous flow rate exceeding 300 L/min; when the valves were tested at a flow rate of 500 L/min and rated pressure of 50 MPa, the opening pressure of the valve reached 6 ms [20]. Subsequently, a drop hammer impact tester was designed for PVC-M pipes, which used high-speed hydraulic ejection to push the push rod to achieve high-speed impact, and the maximum speed reached 19.8 m/s [10]. Lei et al. proposed a gas-liquid coupling direct drive method for marine impact test equipment in which the working load was more than 2.7 t [21]. Using mathematical modeling and numerical simulation, it was verified that the test system could meet the standard shock spectrum under heavy load and high-speed conditions. Yang et al. designed a test and control system based on a PXI data acquisition card for a hydraulic loading test machine; the highly automated system had a short development cycle, and its extension and migration were convenient [22]. The loadings in the above test devices are mostly hydraulic, highlighting the advantages of hydraulic loading in impact testing. However, a significant limitation with respect to the test specimen requirements is that only a single loading mode is possible, and static-dynamic composite loading cannot be attained. Thus, for experimental studies involving rigid-flexible coupling support equipment, it is necessary to develop a new test device.

In this study, a rapid hydraulic impact test machine was developed for the impact testing of rigid-flexible coupling support equipment used in mines. The test machine was designed to meet the performance index of 2000 kN impact force and 10 m/s impact speed. In order to verify the loading effect of the test machine, a prototype was constructed, and simulations as well as experimental research were carried out.

2. Design of Test System

2.1. Requirements of Design for Test System. In order to provide suitable loading methods for mine support equipment, it is necessary to analyze the actual stress situation to which the equipment is subjected. The actual stress situation of the mine support equipment involves bearing the static load of the surrounding coal and rock mass when no rock burst occurred, that is, the initial supporting force [23, 24]. When the rock burst is applied, the supporting equipment is subjected to impact load on the basis of the initial supporting force, that is, the static-dynamic composite load [25]. After the rock burst is applied, the initial static load and impact load will not disappear, and a significant portion will always act on the mine support equipment.

According to the above description, in order to perform the laboratory impact test on medium or low strain rate ($0.1–500\,s^{-1}$) test specimens, such as energy absorbing components or scaled models of mine supports, the designed test system should provide three loading modes: quasistatic loading, impact loading, and static-dynamic composite loading. The test system needs to reach an impact force of up to 2,000 kN and impact speed of 10 m/s. A step waveform was used to model the impact. In order to study the deformation and damage process of the antishock support equipment during the impact process under laboratory conditions, the test system should provide advanced testing facilities, and the test process needs to incorporate automatic control, as well as provide a simple and easy-to-operate human-machine interface. The technical requirements of the test system are shown in Table 1.

2.2. Composition and Principle of Test System. The test machine provides a fixed connection and support for components such as the test specimens, sensors, and impact cylinders and also provides protection for the test [26]. Due to the large energy levels involved in the test, the support should have sufficient strength and rigidity to ensure safe and reliable testing. Different tooling adjustment mechanisms were designed that could facilitate the installation and positioning of mine bolt/anchor for the impact tensile test and also the installation and positioning of specimens such as columns and coal rock bodies for the impact compression test.

The hydraulic loading system is mainly composed of the hydraulic station, impact cylinder, super-large flow quick-opening valve, accumulator system, control valves, hydraulic pipelines, etc. The impact cylinder is the actuator of the test machine, which provides the quasistatic loading force or impact force for the tested specimens, as shown in Figure 1. The loading system is the core part of the test machine, which provides the static and impact power for the test system. It is also responsible for the adjustment of movement during the test preparation phase. In order to simulate the actual working condition of the test specimens, the loading system can provide quasistatic, impact dynamic, and static-dynamic composite loading.

Table 1: Working parameters of impact test machine.

Project	Claim
Theoretical impact force	35~2,000 kN
Maximum impact speed	10 m/s
Maximum impact stroke	500 mm
Maximum impact energy	>800 kJ
Force attenuation under full trip	<20%
Buffer stroke	100 mm
Instantaneous flow	48,000 L/min
Maximum tensile diameter	100 mm
Maximum impact compression size	800 × 1,000 × 1,800 mm

The measurement and control system includes host computer, slave computer, data acquisition card, sensors, and other units. The control system is responsible for the condition monitoring, continuous quantity control, switch quantity control, and test data acquisition of the whole system. In order to facilitate the operation, Labview software was used to develop an operation interface to realize the real-time display and data storage of test data. The testing machine needs to detect both impact force and impact displacement. Thus, MIRAN KTC1-600 instrument was selected as displacement sensor and DYLF-105 was selected as force sensor, which could meet the requirements of the design. The sensor parameters are shown in Table 2.

3. Hydraulic Loading System

3.1. Structure of Loading System. The energy of the impact test machine is provided by the hydraulic loading system. In the test, the impact oil cylinder is driven by the high pressure and large flow of liquid from the hydraulic system. The movement of the fluid is transferred to the piston rod, which applies the impact force on the specimen. When the parameters of the hydraulic loading system are changed, the output characteristics of the test system change accordingly. A schematic diagram of the working principle of the proposed loading system is provided in Figure 2.

The hydraulic loading system of the impact test machine is shown in Figure 2. The system includes the following main parts: (1) impact oil cylinder, (2) accumulator system, (3) impact cylinder control system, (4) oil source system of static load, (5) oil source system of dynamic load, (6) super-large flow quick-opening valve, and (7) oil source system of middle beam.

3.1.1. Impact Oil Cylinder. The impact oil cylinder is the actuator of the impact test machine. The basic parameters of cylinder were calculated based on the actual output requirement. The test machine can be used to conduct impact compression experiments for specimens such as hydraulic props, and it can also provide impact tensile experiments for specimens such as mine bolt/anchor. In order to reduce the inertial effects on impact loading, the mass of the loading part should be reduced. Therefore, the piston rod was designed as a middle hollow structure in order to ensure strength and rigidity, as shown in Figure 2. Such a structure reduces the quality of the piston rod and is also suitable for the installation of the impact tensile test piece. The schematic diagram of the installed mine bolt/anchor is shown in Figure 3. In order to avoid hard impact damage of the impact cylinder caused by high-speed impact loading, a buffer structure was designed inside the cylinder.

3.1.2. Accumulator System. The accumulator system includes accumulators, check valves, and Y-type, four-way, two-position electromagnetic reversing valves. The operator can choose different numbers of accumulators to provide different volumes of fluid according to the requirements of the different experiments, and the different accumulators release the high-pressure liquid synchronously. In order to ensure the multipoint synchronous release of fluid from the accumulators, the check valves and directional control valves have to be connected with each accumulator strictly in accordance with the direction shown in the principle diagram. The accumulator stored energy when the Y-type, four-way, two-position electromagnetic reversing valve was supplied with electricity. When the pressure of the accumulator reached the set value, the electromagnetic reversing valve was powered off. At the same time, the high-pressure liquid in the accumulators was connected to the valve port of the super-large flow quick-opening valve through the check valves. During the dynamic impact test, the valve received the open signal, and the high-pressure oil in accumulators was released synchronously into the impact cylinder.

The specimen was deformed during the impact test under the conditions that the attenuation of impact force in deformation is not greater than 20%, and the pressure drop in the accumulator does not exceed 20% after impact. Considering the filling ratio of the accumulator, it is necessary to increase the total capacity of the accumulator. Considering the actual area of the test machine, actual height of the laboratory, and flexibility of the experiment, twelve 40 L piston accumulators were selected for the impact system.

3.2. Hydraulic Oil Source Systems. According to the test requirements, the impact test system includes the following important hydraulic oil source systems:

3.2.1. Impact Cylinder Control System. The main function of this system is to provide a set of oil sources for control valves to ensure the orderly and stable operation of the test machine. The system includes the gear pump, relief valve, check valve, accumulator, Y-type four-way three-position reversing valve, hydraulic lock, two-way two-position reversing valve, etc. Many hydraulic (mechanical) components must work individually or jointly as part of test preparation before the impact test, which requires the use of many control valves, such as directional control valves, quick release valves, and quick unloading valves. The small accumulator in this system can stabilize the oil pressure.

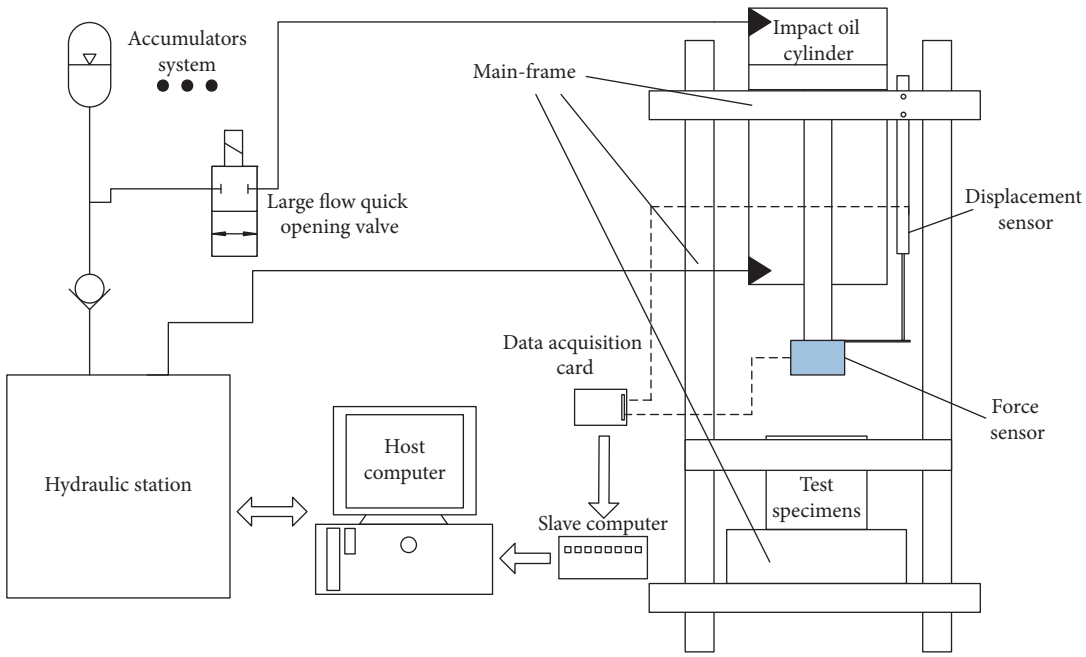

Figure 1: Schematic of hydraulic impact test machine.

Table 2: Sensor parameters.

Displacement sensor	Model	MIRAN KTC1-600
	Sensor range	0–600 mm
	Precision	0.05%
	Nonlinear	±0.04% FS
	Maximum operating speed	10 m/s
	Maximum operating acceleration	20 g
	Working temperature	−60–+150°C
Force sensor	Model	DYLF-105
	Sensor range	0–200 t
	Sensitivity	2.0 ± 0.05 mV/V
	Nonlinear	±0.05% FS
	Safe load limit	150% FS
	Working temperature	−20–+80°C

3.2.2. Static Loading System. This system mainly provides quasistatic load for the specimens. It includes a high-pressure plunger pump, proportional relief valve, check valve, one-way throttle valve, and accumulator. The system can provide stable static load for different specimens in the quasistatic loading test. The plunger pump and proportional relief valve can regulate the pressure for different loads, and the accumulator ensures the steady maintenance of the static pressure.

3.2.3. Dynamic Loading System. The main function of this system is to provide oil for accumulator system, that is, to provide energy for the dynamic impact test. The hydraulic components of the system include high-pressure plunger pump, proportional relief valve, check valve, and throttle valve. The system uses two main oil pumps connected in parallel in order to improve the filling efficiency, and the pressure of the dynamic load was regulated through the proportional relief valve.

3.2.4. Oil Source System for Middle Beam. The system includes vane pump, relief valve, reversing valve, and hydraulic lock. The movement of the middle beam was controlled by this system in order to adjust the loading position according to the size of the different specimens.

3.3. Impact Characteristics of Hydraulic Loading System. The core technology of the impact test machine is the hydraulic loading system. The dynamic performance of the impact test machine was affected directly by the characteristics of hydraulic system. A simulation model of the hydraulic system was established by AMESim, as shown in Figure 4. The simulation time was set to 110 seconds and the simulation step was set to 0.001 seconds. The parameter settings were based on the actual situation and are given in Table 3.

The output of impact velocity and impact force of the system was obtained through the simulation model, as shown in Figure 5. The simulation results showed that the impact action was completed in 0.04 seconds after the opening of the super-large flow quick-opening valve. The impact velocity was about 11 m/s, and the impact force is about 2×10^6 N. The impact speed and impact force can meet the performance requirement of the test system.

4. Analysis of Main Frame of the Impact Test Machine

4.1. Working Condition Analysis and Establishment of 3D Model of the Main Frame. The impact test machine can carry out impact tension and impact compression tests. The test object of the impact tensile load was the mine bolt/anchor, and the impact force was below 500 kN, which means that

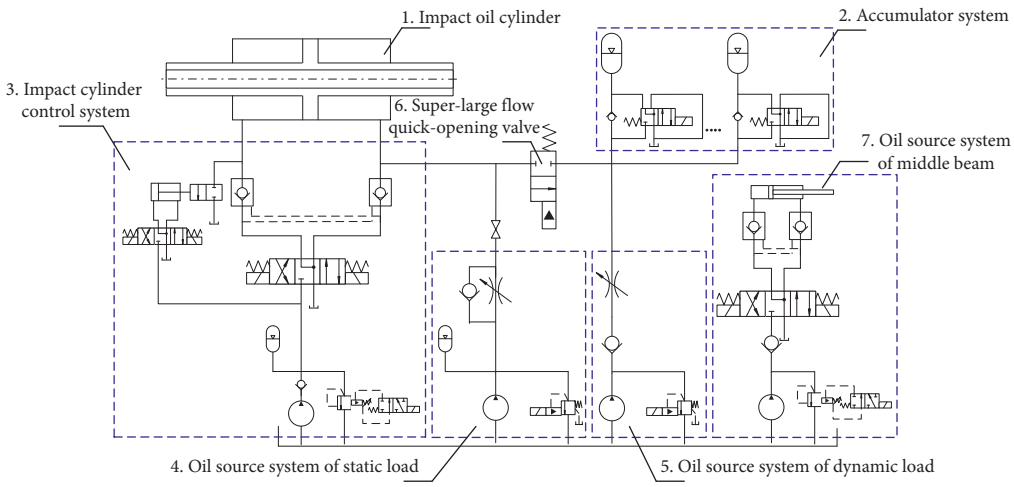

Figure 2: Principle diagram of hydraulic loading system.

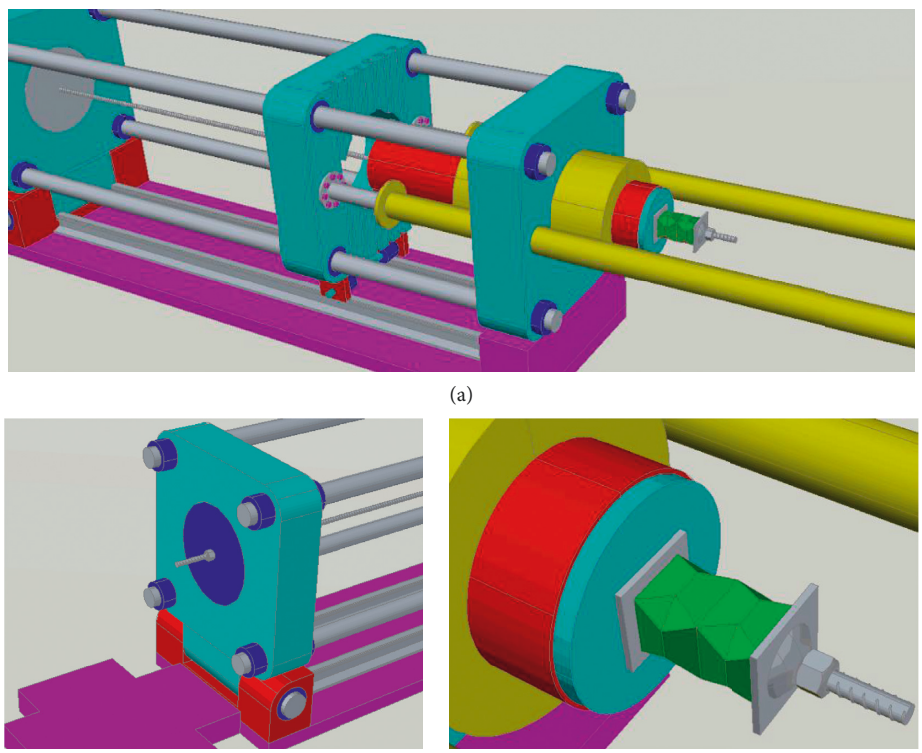

(a)

(b) (c)

Figure 3: Schematic diagram of mine bolt/anchor installation.

the impact tensile test's required load is much less than 2000 kN. The worst working condition encountered by the impact test machine is the impact compression test for a crash box or hydraulic prop. The maximum impact force is as high as 2000 kN in the impact compression test under the worst testing conditions. It is expected that if the main frame can satisfy the impact compression requirement, it can definitely satisfy the impact tensile requirement. In order to study the mechanical characteristics of the main frame of the test machine under such a condition, it is necessary to simplify the frame structure appropriately. The simplified frame structure is depicted in Figure 6. The simplified model is essentially a main frame that ignores the floating midbeam model under the worst working condition.

4.2. Simulation Analysis. The stress and strain of the main frame under impact load were simulated by the explicit display dynamic analysis module in ABAQUS. An explicit large deformation analysis in ABAQUS was used to compute

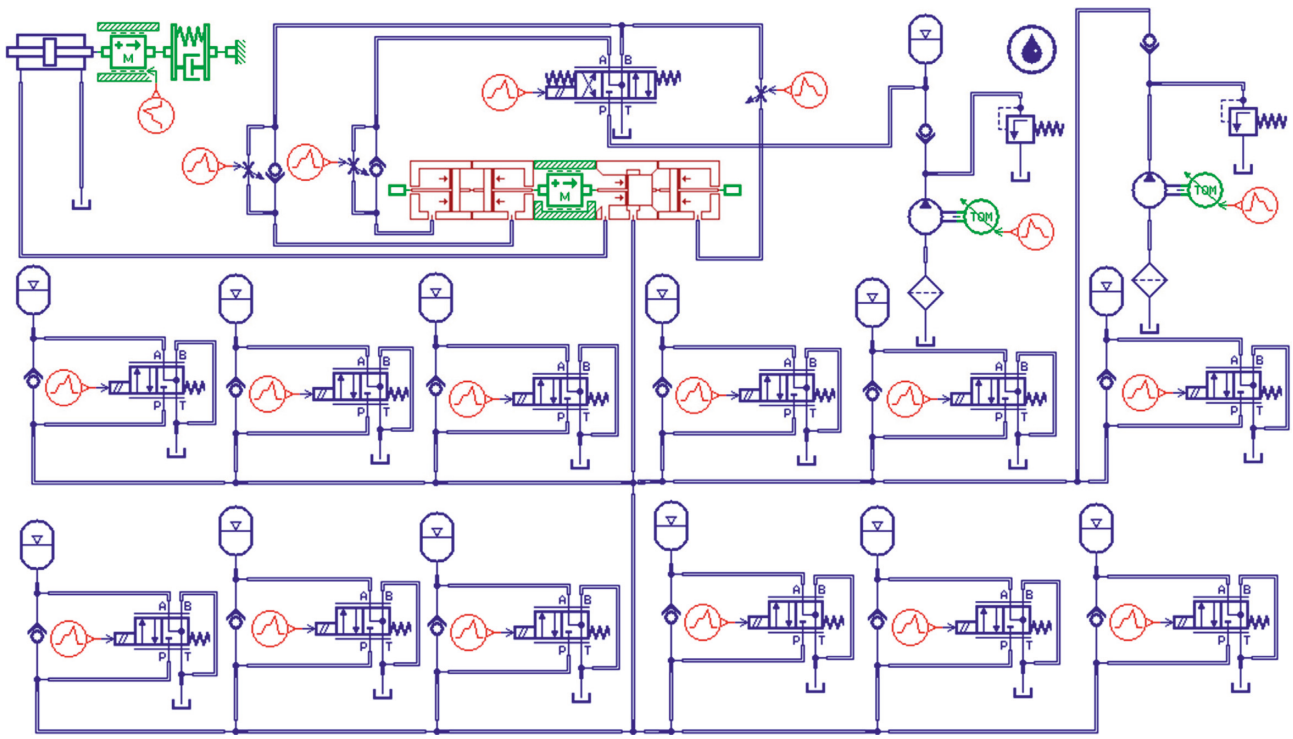

Figure 4: AMESim model of impact loading system.

Table 3: AMESim parameter setting.

Parameters	Value
Initial pressure of oil accumulator for control system	5 MPa
Volume of oil accumulator for control system	40 L
Nominal arrange capacity of pump for control system	20 ml/r
Nominal speed of motor for control system	1450 r/min
Preset pressure of oil relief valve for control system	15 MPa
Initial pressure of 12 accumulators in main oil circuit	5 MPa
Total volume of 12 accumulators in main oil circuit	480 L
Nominal displacement of main pump	250 ml/r
Nominal speed of main motor	1450 r/min
Loading pressure of accumulator set	15 MPa
Piston diameter of impact cylinder	400 mm
Diameter of impact rod	240 mm
Impact rod stroke	350 mm
Quality of quick-opening valve spool	25 kg
Maximum static friction	1200 N
Maximum dynamic friction	1000 N
Impulse load damping	10 N·(m/s)
Impact load stiffness	$1e+07$ (N/mm)
Discharge coefficient	0.7

the stress state present in the main stress frame model under an impact reactive force. The parameters of the simulation condition were set as follows: the reactive force of the main frame under the worst working condition was 2000 kN and the impact time was 0.03 s. The whole dynamic analysis process was divided into 200 frames of animation. The impact response process of the main frame was obtained by examining the stress and displacement nephograms of each frame. The analysis results are shown in Figures 7 and 8.

The stress variation of the main frame is shown in 0 frames, 50 frames, 100 frames, 150 frames, and 200 frames, respectively, as seen in Figure 7. It can be seen that the stress became larger in the ring of the upper and lower beams and the four pillars during the impact process. Along with the change in impact time, the stress concentration occurred in the two contact areas, namely, where the surface load was applied and where the surface load was not applied. This would imply that stress concentration occurred at the boundary of the ring with surface force. The results showed that the impact test machine could replicate the local stress concentration when it was subjected to the appropriate reactive force. The stress concentration area appeared in the upper and lower beams. According to the stress values measured at different points, the design of the main frame met the requirements during the impact process.

The displacement and plastic deformation nephograms of the main frame after impact are depicted in Figure 8. The displacement nephogram showed the displacement between the middle and top parts of the upper beam. The largest displacement was about 0.8917 mm when the impact test machine was subjected to the reactive force. When a 15 MPa surface force corresponding to the reactive force of 2000 kN was rapidly applied to the middle ring of the upper beam and the ring of the lower beam within 30 ms, there was large displacement of the middle part of the upper beam, which can be attributed to the fixation of the lower beam of the

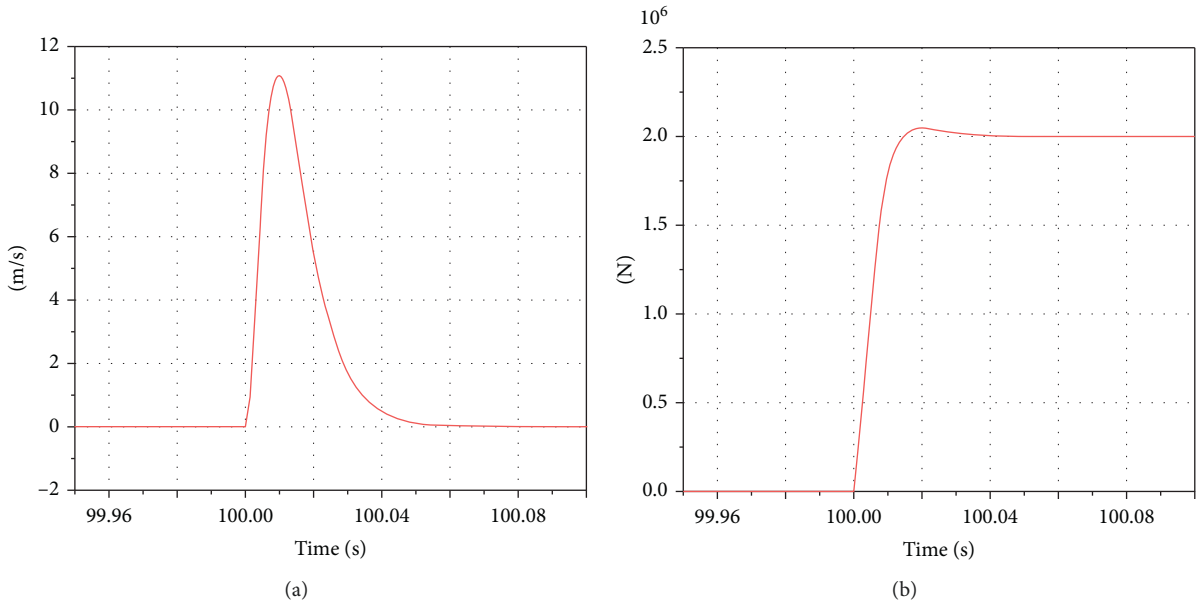

Figure 5: Simulation curves of impact velocity and force. (a) Impact velocity. (b) Impact force.

Figure 6: Structure of the main frame.

impact test machine during the simulation. Subsequently, the main frame began to displace in accordance with the considerable force. No displacement was observed in the fixed restraint around the lower beam, and hence, the maximum displacement occurred in the middle ring region of the upper beam. According to the simulation results, the deformation of the impact test machine can be controlled to within 1 mm after being subjected to dynamic load, which meets the design requirements.

The plastic strain diagram of the main frame after being impacted is shown in Figure 8(b). From the plastic strain diagram, it can be seen that the plastic strain values of each part were all zero after the impact test machine was subjected to impact, which indicated that the material had not yielded. This meant that the impact tester was not damaged after being impacted, only a part of the machine had recoverable elastic deformation, and the design of the main frame met the design requirements.

5. Experimental Research

A prototype was fabricated in the laboratory according to the design of the 2000 kN hydraulic impact test machine. The overall structure of the impact test machine is shown in Figure 9, and the impact test was carried out by the prototype. In order to test whether the machine can meet the technical requirements of the design, a no-loading test was carried out first on the prototype. Subsequently, a static-dynamic composite loading test was performed to verify whether the test machine can meet the loading mode requirements.

The impact force and flow rate required for the impact tension test are much smaller than those required for impact compression. Therefore, it follows that once the test equipment can satisfy the impact force and flow required for the impact compression test, it will be able to satisfy the requirements of the impact tensile test as well. Therefore, only the impact compression test was performed as part of the test protocol.

5.1. No-Loading Test. A no-loading test was first carried out to verify whether the flow rate and impact speed of the super-large flow quick-opening valve met the requirements. Referring to the working conditions of the simulation analysis, the dynamic response curve of the impact rod was measured under no-loading condition of the impact cylinder, as shown in Figure 10. In Figure 10, the impact velocity curve was obtained by differential analysis of the measured impact displacement data.

The measured impact velocity of the test machine was 12 m/s, and the curve is presented in Figure 10(a). The actual impact time was 35 ms which can be seen from Figure 10. In order to verify the instantaneous flow of the test machine, the data in Figure 10(b) were used to calculate the actual flow, albeit indirectly, using the following flow calculation formula:

$$Q = \frac{V}{t} = \frac{\pi\left(D^2 - d^2\right)l}{4t}, \tag{1}$$

where Q is the actual flow, V is annular volume of the hydraulic cylinder, t is impact time of the piston, D is diameter of the piston, d is diameter of the piston rod, and l is

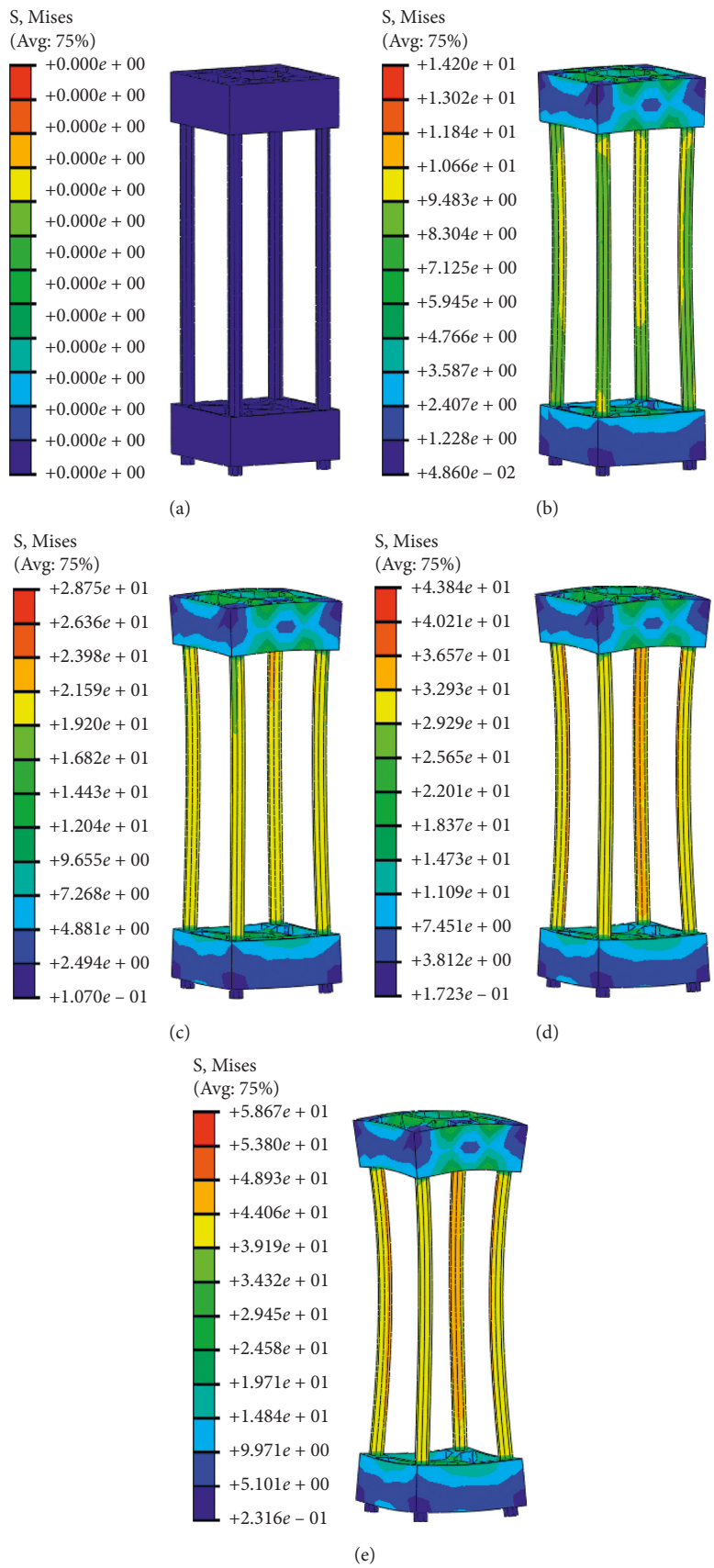

Figure 7: Stress nephogram of the test frame. (a) Frame = 0. (b) Frame = 50. (c) Frame = 100. (d) Frame = 150. (e) Frame = 200.

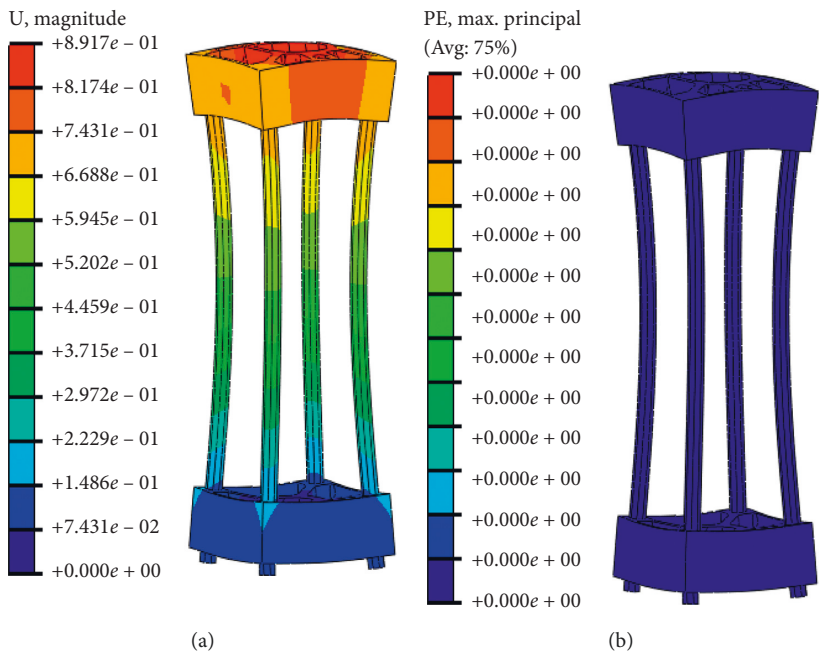

Figure 8: Impact displacement and plastic deformation nephograms of the testing frame. (a) Displacement. (b) Plastic deformation.

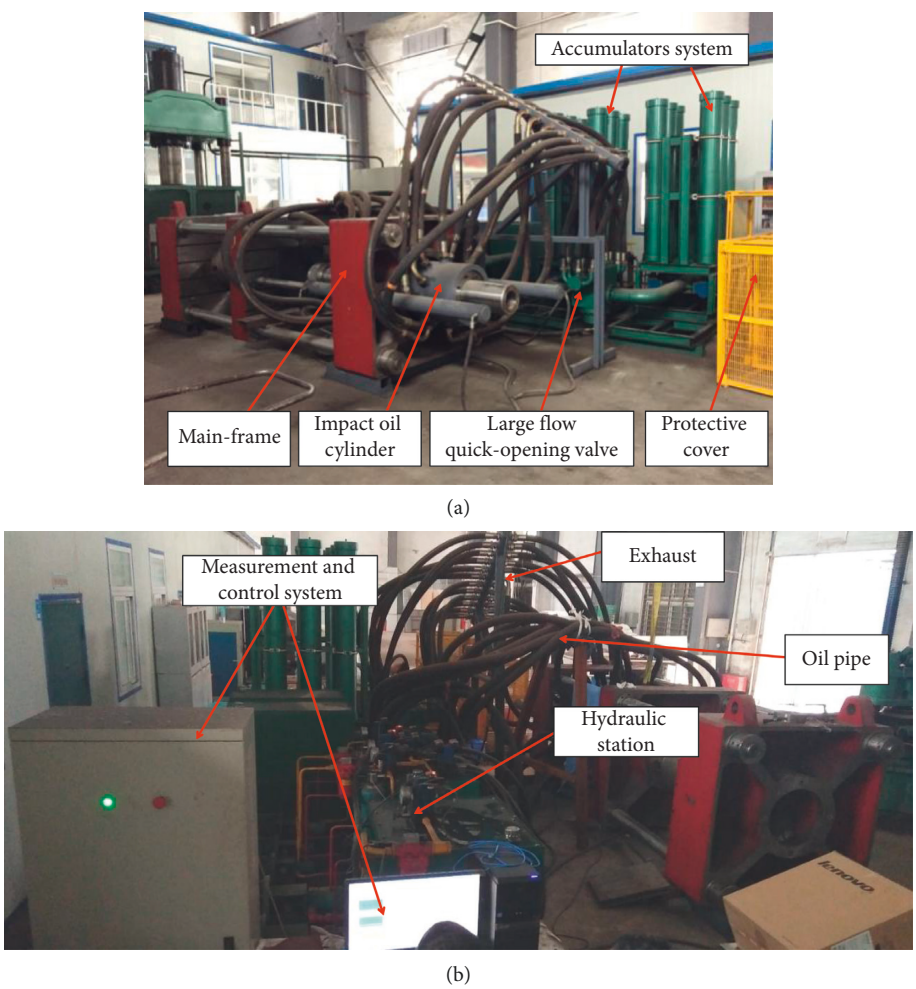

Figure 9: Impact test machine. (a) General drawing of test machine 1. (b) General drawing of test machine 2.

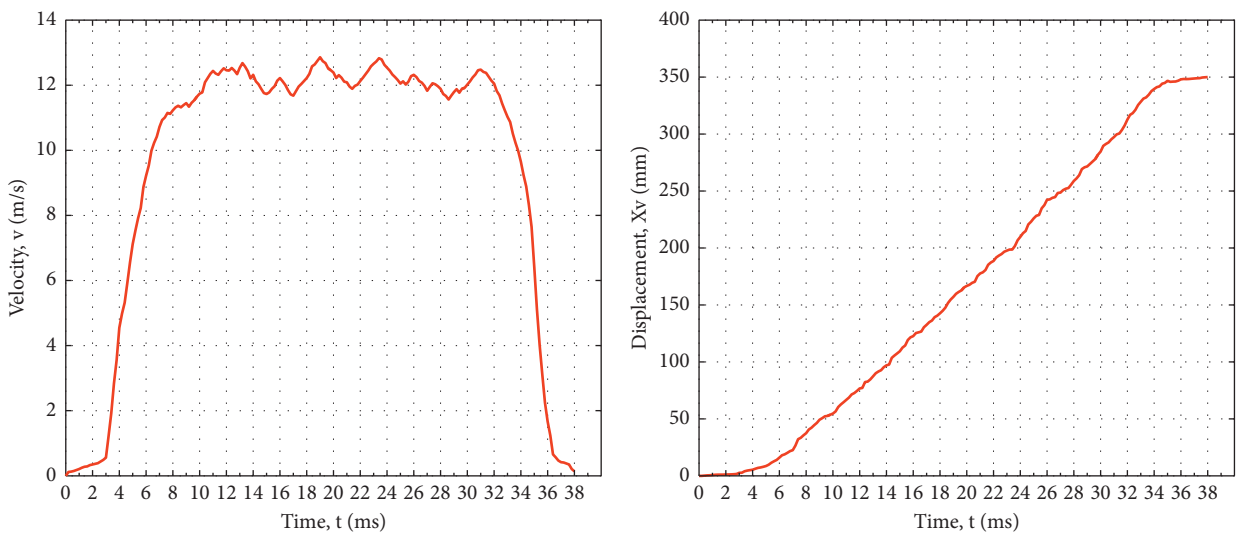

(a) (b)

Figure 10: Experimental response curves of the impact rod. (a) Curve of measured impact velocity. (b) Curve of measured displacement of impact bar.

Figure 11: Single crash box.

impact displacement of the piston rod. The piston diameter of the impact cylinder was designed as 400 mm, with piston rod diameter 240 mm, displacement of piston rod 350 mm, and actual impact time 35 ms. According to the flow calculation formula, the actual flow rate of the hydraulic fluid in the impact cylinder during the impact process is 48,254 L/min. This value is greater than the actual flow rate of 48,000 L/min and hence meets the flow demand.

The no-loading impact test demonstrated that the design of the 2,000 kN impact test machine was feasible and that the no-loading speed and the instantaneous flow can meet the target requirements.

5.2. Impact Compression Test. According to the research needs, impact testing of the crash box was carried out. The crash box could imitate the rigid-flexible coupling support equipment. The structure of the single crash box is shown in Figure 11. In order to detect the energy absorption of the crash box, a static-dynamic composite loading test was applied. The installation and impact results of the crash box are shown in Figure 12, and the impact velocity and force curves are shown in Figure 13. The impact velocity curve was obtained by a similar method mentioned above in Figure 10.

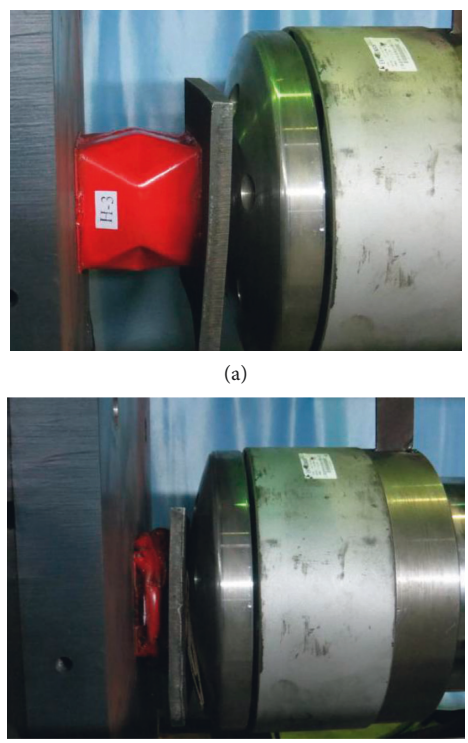

(a)

(b)

Figure 12: Impact test of crash boxes. (a) Installation of single crash box. (b) Impact result of single crash box.

The maximum impact velocity associated with the test machine was determined to be 7.44 m/s, and the maximum impact force was 1680 kN. The results of this test provided

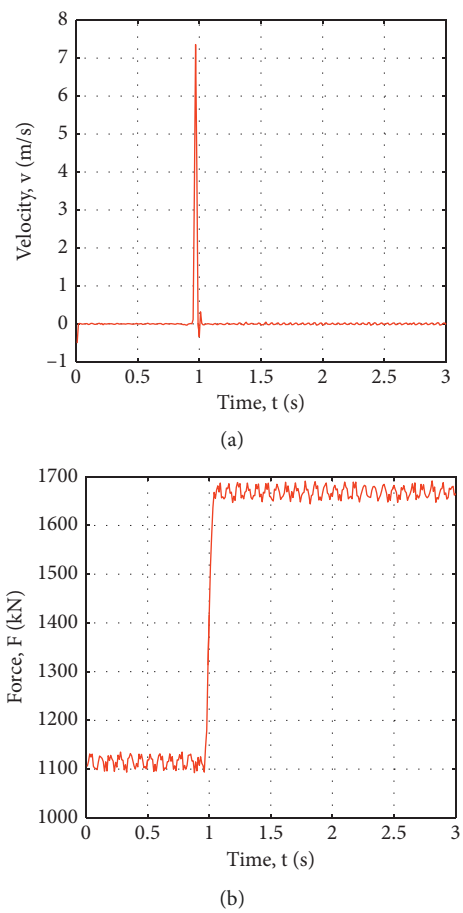

Figure 13: Impact curves. (a) Curve of measured impact velocity. (b) Curve of measured impact velocity.

reliable experimental data for the study of rigid-flexible coupling support equipment used in mines and the energy absorption characteristics of energy absorption components, thereby providing a useful reference for experimental research regarding other energy absorption components. It can be seen from Figure 13 that the impact testing machine perfectly reproduced the static-dynamic composite loading mode, which can satisfactorily simulate the impact pressures generally encountered in the mining industry. The test confirms that the hydraulic impact test machine can meet the design requirements pertaining to the loading modes.

6. Conclusion

In this paper, a method of conducting high-pressure rapid impact tests by hydraulic loading is presented. A high-speed, high-power hydraulic impact test machine with a maximum impact force of 2,000 kN and maximum impact velocity of 10 m/s was designed. The hydraulic system and main frame were also designed in a manner appropriate to the design requirements. The AMESim simulation analysis and the ABAQUS/Explicit simulation results verified the effectiveness of the proposed design, and design parameters of the system also met the stipulated technical requirements. A prototype design had been carried out, and a no-loading test was carried out to verify that the technical parameters of the test machine met the design requirements. The test machine was capable of three test modes: quasistatic loading, dynamic loading, and static-dynamic composite loading. The testing modes were verified through a static-dynamic composite loading test of the single crash box. The test machine can effectively simulate the rock burst condition and provide an effective laboratory-based experimental method for the research and development of mine support equipment. The application of this experimental equipment can augment the research on the performance of mine support equipment and support mechanisms, thereby indirectly contributing to the reduction of dynamic disaster losses in mines.

Data Availability

The data in the manuscript were collected in the laboratory, and we are willing to provide the raw data if needed.

Conflicts of Interest

The authors declare that there are no conflicts of interest.

Acknowledgments

The research work was supported by the National Natural Science Foundation of China under grant no. 51574140 and the Liaoning Province Department of Education Foundation (serial no. 17-1146).

References

[1] L. Chen, H. Manchao, and G. Liwei, "Analysis on kinetic features of constant resistance high deformed bolt under different impact velocity," *Coal Science and Technology*, vol. 43, no. 9, pp. 53–58, 2015.

[2] F. Yukai, M. Yongchun, and Y. Wei, "Comparison analysis on dynamic mechanics features of coal and rock under shock load," *Coal Science and Technology*, vol. 43, no. 11, pp. 6–11, 2015.

[3] W. Di, W. Song, W. Ke, Z. Hongbao, and S. Yunfei, "Experimental study on damage evolution law of rock under dynamic impact loadings," *Coal Technology*, vol. 34, no. 2, pp. 104–106, 2015.

[4] M. V. Kurlenya, V. N. Oparin, and V. I. Vostrikov, "Pendulum-type waves. Part II: experimental methods and main results of physical modeling," *Journal of Mining Science*, vol. 32, no. 4, pp. 245–273, 1996.

[5] L. Baofu, W. Xiangzhi, R. Yongkang, and L. Xiaojun, "Dynamic failure mechanism and control technology of roadway floor," *Coal Science and Technology*, vol. 41, no. 10, pp. 34–37, 2013.

[6] J-f. Pan, D.-b. Mao, H. Lan, W. Shuwen, and Q. Qingxin, "Study status and prospects of mine pressure bumping control technology in China," *Coal Science and Technology*, vol. 41, no. 6, pp. 21–25, 2013.

[7] L. Xiangfeng, P. Yishan, and L. Zhonghua, "Rigid-flexible energy absorbing structure with porous metal material and its application to roadway support of rockburst," *Journal of Disaster Prevention and Mitigation Engineering*, vol. 31, no. 2, pp. 185–190, 2011.

[8] Y.-J. Zuo, Q. Zhang, T. Xu, Z.-H. Liu, Y.-Q. Qiu, and W.-C. Zhu, "Numerical tests on failure process of rock particle under impact loading," *Shock and Vibration*, vol. 2015, Article ID 678573, 12 pages, 2015.

[9] H. He, R. Wensheng, W. Xiaojun, and W. Lihua, "Design and application of high speed drop hammer impact testing machine for PVC-M pipe," *China Measurement and Testing Technology*, vol. 40, no. S1, pp. 72–74, 2014.

[10] Z. Ming, Z. Guifan, and Z. Liang, "Design on drop hammer typed impact testing bed based on LabVIEW," *Journal of Machine Design*, vol. 27, no. 2, pp. 93–96, 2010.

[11] L. Weiping, L. Na, W. Yalong, L. Minghua, and Z. Xiang, "Comparison and analysis on drop-weight tear test (DWTT) and high energy pendulum impact test," *Welded Pipe and Tube*, vol. 37, no. 2, pp. 44–47, 2014.

[12] C. Froustey, M. Lambert, J. L. Charles, and J. L. Lataillade, "Design of an impact loading machine based on a flywheel device: application to the fatigue resistance of the high rate pre-straining sensitivity of aluminium alloys," *Experimental Mechanics*, vol. 47, no. 6, pp. 709–721, 2007.

[13] A. Sharma, D Karthik, J. H. Kumar et al., "Design and fabrication of drop weight impact testing machine," *Imperial Journal of Interdisciplinary Research*, vol. 3, no. 6, 2017.

[14] A. Shterenlikht, S. H. Hashemi, J. R. Yates, I. C. Howard, and R. M. Andrews, "Assessment of an instrumented Charpy impact machine," *International Journal of Fracture*, vol. 132, no. 1, pp. 81–97, 2005.

[15] X. X. Zhang, G. Ruiz, and C. R. Yu, "A new drop-weight impact machine for studying fracture processes in structural concrete," *Strain*, vol. 46, no. 3, pp. 252–257, 2010.

[16] J. Chao, Y. Shihua, J. Chongbo, G. Xiaolin, and H. Jibin, "Study on system design of a hydraulic thrust stand," *Chinese Hydraulics and Pneumatics*, vol. 29, no. 2, pp. 33–36, 2006.

[17] Z. Zirong, L. Wencheng, Y. Chengwen, M. Fafei, Y. Cunzhi, and Z. Jiyun, "The design of hydraulic system for the stretch and shock test bed of the mine anchor," *Chinese Hydraulics & Pneumatics*, vol. 5, no. 23, pp. 65-66, 2008.

[18] G.-X. Wang and H.-x. Hua, "Mechanism analysis and simulation for a novel anti-shock testing system for heavy-weight ship board equipment," *Mechanics in Engineering*, vol. 31, no. 4, pp. 54–58, 2009.

[19] X. Tengfei, Z. Jiyun, W. Wenrui, Q. Houbao, and W. Zhenxing, "Study on dynamical characteristics test methods of high flow relief valve for hydraulic support," *Chinese Hydraulics and Pneumatics*, vol. 33, no. 12, pp. 17–19, 2010.

[20] K.-p. Xu, H.-g. Ding, G.-z. Li, and T.-f. Xie, "Research on experimental platform of high pressure and large flow relief valve," *Coal Mine Machinery*, vol. 34, no. 2, pp. 165-166, 2013.

[21] Z. Lei, L. Dongyue, and W. Zhaodong, "Research on scheme and properties of dual-wave shock test system for shipboard equipment," *Acta Armamentarii*, vol. 6, no. 1, pp. 136–140, 2015.

[22] W. Yang, J. Shubo, and W. Sen, "System design of impact testing machine," *Bulletin of Science and Technology*, vol. 33, no. 10, pp. 117–120, 2017.

[23] A. Nierobisz, "Investigation of mine roadway support load during seismic events," *Journal of Mining Science*, vol. 48, no. 2, pp. 298–307, 2012.

[24] Y.-S. Pan, Y.-H. Xiao, Z.-H. Li, and K.-X. Wang, "Study of tunnel support theory of rockburst in coal mine and its application," *Journal of China Coal Society*, vol. 39, no. 2, pp. 222–228, 2014.

[25] Y. Juwen, T. Zhi, H. Feng, Z. Yingying, and Y. Yongjiang, "Energy absorption and anti-impact properties of mine diameter-expanding energy absorption components," *Journal of Vibration and Shock*, vol. 34, no. 8, pp. 134–138, 2015.

[26] W. Jie, Z. Jianzhuo, A. Zhandong, W. Hui, and W. Aiwen, "Study on high-speed hydraulic impact test bench," *Journal of Vibration and Shock*, vol. 37, no. 21, pp. 143–149, 2018.