Hindawi
Shock and Vibration
Volume 2020, Article ID 3292713, 7 pages
https://doi.org/10.1155/2020/3292713

Research Article

Analytical Study of Operational Properties of a Plate Shock Absorber of a Sucker-Rod String

Andrii Velychkovych, Ivan Petryk, and Liubomyr Ropyak

Ivano-Frankivsk National Technical University of Oil and Gas, 76019, 15 Karpatska Str., Ivano-Frankivsk, Ukraine

Correspondence should be addressed to Andrii Velychkovych; a_velychkovych@ukr.net

Received 31 July 2019; Revised 16 November 2019; Accepted 13 December 2019; Published 9 January 2020

Academic Editor: Roger Serra

Sucker-rod pump plant operation is accompanied by inertial and shock loads, affecting the fatigue strength of sucker rods and causing possible accidents. This work proposes the original design of a shock absorber of a sucker-rod string. The peculiarity of the proposed design is the usage of thin plate packages as a bearing elastic element of the shock absorber. This approach to the elastic element' design provides the shock absorber to be easy to manufacture and operate. Sucker-rod string protection from extra load will increase the sucker-rod pump plant efficiency in general. This study aims at developing shock absorber's design and studying its most important performance options—strength and rigidity. A mechanical and mathematical model of a shock absorber's elastic element was developed in order to specify its deformation. A package of thin plates was modelled as an equivalent solid plate with a cylindrical rigidity providing equal properties of the solid model and the plate package. This model makes possible to describe analytically the stress-strain state of the shock absorber bearing elements. The work presents the final expressions of the shock absorber's strength and rigidity assessing in a convenient form for engineering practice. The numerical approbation of the obtained analytical results was carried out as the case of a plate elastic element. The authors give recommendation on the bearing unit's design of the shock absorber.

1. Introduction

Pump-jacks with rotary and combined balancing, driven by asynchronous motors, are widely used for oil production by deep-barrel pumps due to their advantages as simplicity of construction and work reliability [1–3]. However, these units do not provide best (optimal) loading conditions for sucker rods as far as sucker-rod string's motion is determined only by driver's kinematic and does not depend on the load in the upper part of the string [1, 4].

The sucker-rod string is the most important element to transmit movement to a deep-barrel pump's plunger. Regular (intended by the project) alternating loading occurs in the upper part and changes on an asymmetric cycle with a positive skewness.

Apart from regular loading, sucker-rod pump plant usage is accompanied by a wide range of oscillations and inertial and shock loadings, adversely affecting the fatigue strength of sucker rods and pump tubes and causing possible accidents. Therefore, sucker-rod protection from extra loading is an urgent problem; its solution will increase sucker-rod pump plant's efficiency and effectiveness and save on additional costs.

2. Literature Review: Purpose and Objectives of the Research

The deformable- and rigid-body mechanics consider the sucker-rod string as an elastic-stepped rod located in an elastic tube. The upper end of the rod provides kinematic movement defined by the plant's driver, and the lower end is subjected to a force that depends on the direction of its movement. A failure of suck rod strings leads to long and expensive underground well repair [5–7]. Some modern methods of increasing sucker-rod string's life solve only part of the problems, for example, preventing rod's corrosion [8], protecting rod's frictional actuation [9], and self-unscrewing. Irregular dynamic and vibration loads are the serious problems of sucker-rod string's operation [10].

Identifying the factors that influence on sucker-rod string dynamic and calculation method to consider these factors can significantly assist in increasing the reliability of the sucker-rod pump plant. Models describing the behavior of bar columns began to be developed in the 1950s [11] and continue to be refined and developed [12–14]. Mechanical fluctuations and fluctuations in fluid flows cause complex vibrations in hydraulic pumps. Therefore, improvement of hydraulic pump operating condition should be provided at the design stage. In particular, the study by Zhang and Zhang [15] investigated the dynamic reactions of a hydraulic plunger pump by numerical simulation. Gu et al. and Zi-Ming et al. [16, 17] presented mechanical and mathematical modeling of velocity and acceleration of the rod string suspension point which refer to the loading in the polished rods. The most up-to-date approaches of pumping rod's fatigue diagnostics and safe operation life prediction connected with the neural networks [18].

Sucker-rod string is subjected to additional static and dynamic loads associated with forced and free, parametric, and friction vibrations especially when operating a complex-profile well. Besides, these loads are transmitted to the elements of the sucker-rod pump's driver [19, 20]. The friction pairs of the pumping plants wear during oil production. The article [21] studied wear effect on the magnitude and nature of the loads at the rod string suspension point. A number of authors recommended to use special protective coatings in order to reduce contact surface wear [22, 23]. The calculation of the required parameters of such coatings was carried out in [24].

Nowadays, designers of the sucker-rod pumps attempt to use soft-actuated drivers as hydraulic drivers or high-slip motors. The abovementioned drivers provide decreasing dynamic loads and longitudinal vibrations influence on driver's characteristics due to not only driver's kinematics but also the load value in the upper part of the rod string [25].

Some authors [26–28] consider vibration reduction of oil equipment as the key factor to preserve dynamic stability of pump rods and tubes. The works [29–31] studied actual vibration protection problems for designing long structures (strings of rods, pipes, and so on). The works [32–34] simulated contact interaction in shell-core systems (as rod-rigid clip, elastic body-cylindrical shell) under non-monotonic loading to determine the strength, rigidity, and damping ability of these systems.

The phenomenon of "sucker-rod string-well's wall" contact interaction is a factor providing energy and safety of sucker-rod string operation. Therefore, in this frame, mathematical modeling issues of statics and dynamics of the core systems under the conditions of the rod and elastic or inelastic medium interaction are at stake [35–38].

Experimental and field data show that shock absorbers in the drivers of sucker-rod pump plants reduce the dynamic loads on pump-jacks and reduce the intensity of applying loads to the sucker-rod string [1, 39, 40]. The last note is of paramount importance for the strength and durability of the sucker rods.

There are pneumatic and hydrodynamic shock absorbers made as short cylinders, suspended from the balancer and filled with air under constant pressure or oil and air. Sometimes, they use shock absorbers consisting of several rubber rings. They are mounted on the suspension for the pump rods [1, 39].

Besides, there are shock absorbers consisted of some hinged metal links and a coil spring. Rubber shock absorbers differ favorably from others by higher energy dissipation due to internal friction. However, their characteristic instability significantly limits the scope of their usage [40, 41].

Disc springs are quite widely used in engineering; they have a high bearing capacity, but the low compliance does not allow to provide the required performance of the sucker-rod spring's shock absorber [42].

Hydropneumatic shock absorbers with variable (adaptive) rigidity have been well established [43], but the complexity of structures, installation, maintenance, and the relatively high cost have prevented their widespread use in oil/gas fields.

Rigidity and damping of the elastic element mainly determine the effectiveness of a vibration protection system. To address the issue of vibration protection for the particular case, these parameters are subjected to manage at the design stage to reduce elastic elements' stiffness without compromising their strength and to provide the necessary damping. The authors previously developed a slotted shell elastic element, which completely satisfies the following requirements [44]. However, the rather large longitudinal dimension of the shock absorber for elastic element mounting is inconvenient for use in the suspension of sucker-rod springs.

In the frame of this work, the authors propose to use packages of annular plates as elastic elements for shock absorbers of sucker-rod strings. Such elastic elements are technological and simple to manufacture and operate. At the same time, they provide the required shock absorber flexibility and durability. Successful design and usage of the proposed shock absorber depends on the accuracy of its calculation. The work presents the main concepts of mechanical and mathematical modeling of the shock absorbers for sucker-rod strings, which were designed based on annular plate packages. The article aims at studying the most important performance–the strength and rigidity of the shock absorber.

3. Design of a Plate Package Elastic Suspension of the Sucker Rod-String

Figure 1 presents an elastic suspension of a polished rod with the plate shock absorber of the sucker-rod string. It consists of the lower 6, the upper 3, and the additional 1 traverses, the clamps for the ends of rope 4 and rope 2, the lifting screws for upper traverse 5, nut 11, and locknut 12 for fixing polished rod 10 (nut 11 and locknut 12 can be replaced by the wedge device), nut 7 for adjusting the shock absorber, piston 9 and also shock absorber 8, which is made in the form of the packages of plates. It should be noted the shock absorber can have packages of plates with different rigidities. They are installed with the possibility to exclude from the work of separate packages of plates during overloads. This

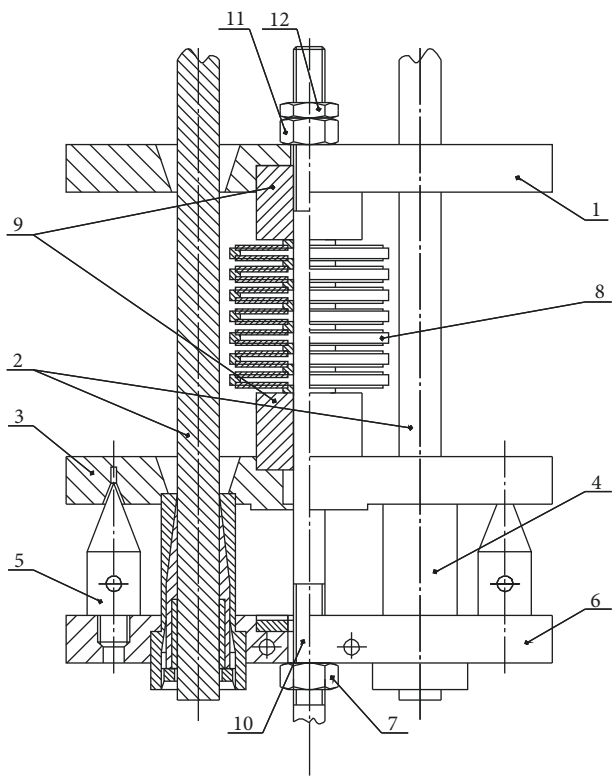

Figure 1: The elastic suspension of the polished rod: 1, additional traverse; 2, ropes; 3, upper traverse; 4, clamps for the ends of the rope; 5, the lifting screws for the upper traverse; 6, lower traverse; 7, adjusting nut; 8, shock absorber; 9, pistons; 10, polished stem; 11, fixing nut; 12, locknut.

fact expands the range of operating loads for which the elastic suspension can effectively perform its functions.

The following describes the operation of the sucker-rod pump plant with the elastic suspension. When the head of the balancer moves upward, the lower 6 and upper 3 traverses load the elastic member and approach to additional traverse 1. In this case, additional traverse 1 and the sucker-rod string, which is suspended on it, for some time, remain motionless. When the elastic force of the shock absorber, at its certain submersion, will be equal to the weight of the sucker-rod string together with the plunger and the liquid, which is above the plunger, the sucker-rod string begins the smooth movement up. It should be noted the useful length of the plunger stroke is reduced by the amount of submersion of the shock absorber, and this fact must be taken into account at the design stage.

When the balancer head moves down at the moment of opening of the pressure valve and the discharge of the sucker-rod string from the weight of the liquid, the moving parts of the shock absorber gradually return to the initial position, and at this time, the head of the balancer, upper, and lower traverses move down, and the sucker-rod string remains motionless for some time until the submersion of the spring that appears from its compression is not exhausted.

Consequently, during loading of the shock absorber, its working links (there are plate packages) change their shape and accumulate the potential energy of elastic deformation. When the axial load is reduced, the moving parts of the elastic suspension are returned to the original position due to the energy accumulated by the plates. The gaps between the plate packages are designed so that at overload, the plate is excluded from the work. Thus, at the certain shock absorber characteristic, the nature of application and the value of maximum and minimum forces acting on the sucker-rod string are varied, and the effects of the vibrational, inertial, and shock loads are reduced.

Concerning the reduction of the useful displacement of the plunger, it can be stored at the required level by known methods, if the technical characteristics of the pump-jacks are possible or use special extension of the displacement. It should be noted the use of nut 7 is possible to smoothly adjust from minimum to nominal submersion of the proposed elastic suspension. This property can be used if necessary to smoothly control the efficiency of the sucker-rod pump plant, with that the elastic suspension performs basic functions and has expanded functionality.

4. Analytical Analysis of the Operational Characteristics of the Shock Absorber

Determine the stress and displacement in the plate shock absorber, the scheme of which is given in Figure 2. If the physical and geometric characteristics of the plate packages are the same, then submersion of the shock absorber is determined by deflection of one package, which is increased on n times, where n is total number of plate packages in the shock absorber.

To describe the deformation of a shock absorber, we construct a mechanical and mathematical model of the plate package. In the proposed model, we treat a thin plate as the working link, the bend of which can be considered independently of the stretch. We assume that, in the package of two plates (Figure 3), there are no cross-links and friction between the plates. Plates in the package interact with each other with radial slip and have the perfect normal contact. Each of them is deformed as the separate plate, which has its own neutral surface. The load on the package of plates is distributed between the plates in proportion to their stiffness in bending (in this case, evenly distributed).

Taking into account the above assumptions, we assume in the calculations that the cylindrical stiffness of the package of plates, in the general case, equals $D = Eh^3/[48(1-\mu^2)]$, where $h/2$ is the thickness of one plate in the package; E and μ are the elastic constants of the plate material (Young's modulus and Poisson's coefficient).

From the equilibrium condition of the central part of the package of plates, we determine the intensity of the transverse force Q_z as follows:

$$Q_z \cdot 2\pi r = q \Longrightarrow Q_z = \frac{q}{2\pi r}. \quad (1)$$

We write the St Germain Lagrange equation for the axisymmetric bend of the circular plates as [45]

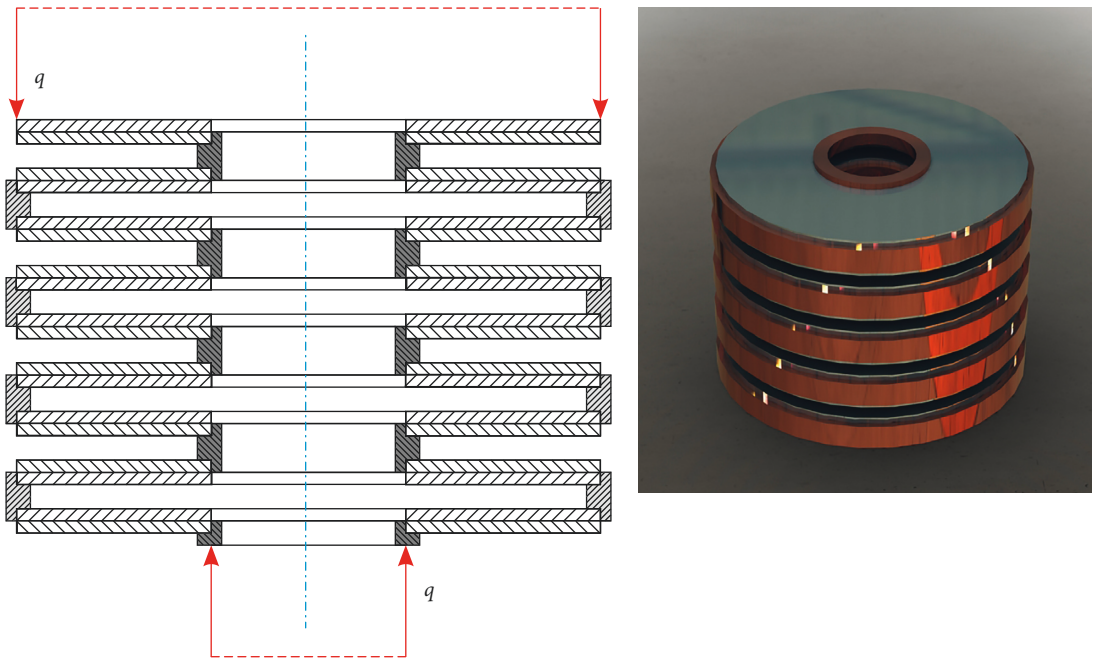

(a) (b)

Figure 2: The plate package shock absorber: (a) load diagram; (b) general view.

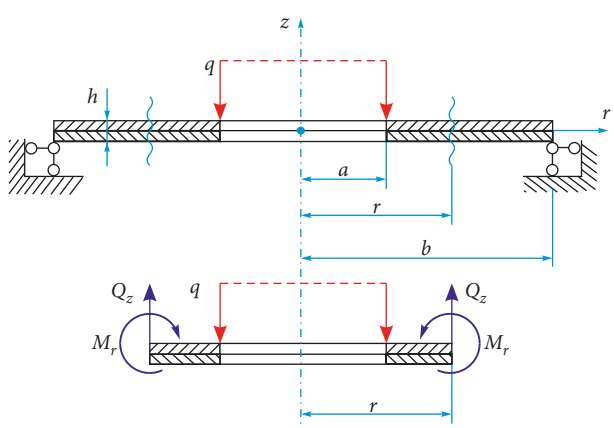

Figure 3: The load diagram of the one plate package.

$$r\frac{d^2\theta}{dr^2}+\frac{d\theta}{dr}-\frac{\theta}{r}=-\frac{Q_z r}{D}. \tag{2}$$

Radial and tangential bending moments are

$$M_r = D\left(\frac{d\theta}{dr}+\mu\frac{\theta}{r}\right),$$
$$M_t = D\left(\frac{\theta}{r}+\mu\frac{d\theta}{dr}\right). \tag{3}$$

After double integration (2) and taking into account (1), we obtain

$$\theta = C_1 r + \frac{C_2}{r} - \frac{q}{4\pi D} r \ln\frac{r}{a}. \tag{4}$$

Constants of integration C_1 and C_2 are determined from next boundary conditions. The radial bending moment M_r at the edges of plates, that is when $r = a$ and $r = b$, must be equal to zero:

$$(M_r)_{r=a} = 0,$$
$$(M_r)_{r=b} = 0. \tag{5}$$

Using conditions (5) and equations (3) and (4), we obtain the following expressions for finding C_1 and C_2:

$$C_1 = \frac{q}{4\pi D(1+\mu)}\left[\frac{b^2}{b^2-a^2}(1+\mu)\ln\frac{b}{a}+1\right],$$
$$C_2 = \frac{q}{4\pi D(1-\mu)}\frac{a^2b^2}{b^2-a^2}(1+\mu)\ln\frac{b}{a}. \tag{6}$$

Substituting (4) and (6) into expression (3), we get

$$M_r = \frac{q(1+\mu)}{4\pi}\left[\frac{b^2}{b^2-a^2}\left(1-\frac{a^2}{r^2}\right)\ln\frac{b}{a}-\ln\frac{r}{a}\right],$$

$$M_t = \frac{q(1+\mu)}{4\pi}\left[\frac{b^2}{b^2-a^2}\left(1+\frac{a^2}{r^2}\right)\ln\frac{b}{a}-\ln\frac{r}{a}+\frac{1-\mu}{1+\mu}\right]. \tag{7}$$

The maximum equivalent stress is occurred at the inner edge of the package of plates:

$$\sigma_{\text{eq}} = \frac{3q}{\pi h^2}\left[\frac{2b^2}{b^2-a^2}(1+\mu)\ln\frac{b}{a}+1-\mu\right]. \tag{8}$$

We integrate (4) and find the function of the deflection of the package of plates:

$$w = C_3 - C_1\frac{r^2}{2} - C_2\ln\frac{r}{a} + \frac{qr^2}{8\pi D}\left(\ln\frac{r}{a}-\frac{1}{2}\right). \tag{9}$$

To determine the integration constant C_3, we use the boundary condition $(w)_{r=b} = 0$. Then,

$$w = \frac{C_1}{2}\left(b^2-r^2\right) + C_2\ln\frac{b}{r} + \frac{q}{8\pi D}\left[r^2\ln\frac{r}{a} - b^2\ln\frac{b}{a} + \frac{b^2-r^2}{2}\right]. \tag{10}$$

To find the submersion of the shock absorber, we accept in (10) $r = a$ and take into account (6); as the result, we obtain

$$w^* = \frac{q\cdot n}{8\pi D}\left[\frac{1}{2}\cdot\frac{3+\mu}{1+\mu}\left(b^2-a^2\right) + \frac{1+\mu}{1-\mu}\times\frac{2a^2b^2}{b^2-a^2}\ln^2\frac{b}{a}\right]. \tag{11}$$

It should be noted, at the time of bending, the working links of the suspension, the tangential stresses due to the shear strain appear in their sections. However, for thin plates, the effect of the shear is relatively small, and in order to obtain simple engineering formulas, it can be neglected, while the accuracy of calculations is quite high. In cases of using of plates of large thickness or using special materials for which the shear modulus is much lower than Young's modulus, it is impossible to ignore the shear.

In order to evaluate the impact of dynamic effects on the strength of the working elements of the elastic suspension, we considered that, in addition to the constant force q, there is a disturbing force:

$$q(t) = q_1\cdot\cos\zeta t. \tag{12}$$

The frequency of natural oscillations of the elastic suspension

$$\eta = \sqrt{\frac{8\pi D}{(nq/g)\left[\left(\left((3+\mu)(b^2-a^2)\right)/(2(1-\mu))\right) + \left((1+\mu)/(1-\mu)\right)(2a^2b^2/(b^2-a^2))\ln^2(b/a)\right]}}, \tag{13}$$

and the dynamic coefficient

$$\beta = \frac{1}{1-\left(\zeta^2/\eta^2\right)}. \tag{14}$$

Analyzing formula (14), taking into account (12) and (13), we obtain the following conclusion. The frequency of change of the disturbing force, which depends on the operating mode of the sucker-rod pump plant, is much smaller than the frequency of the natural oscillations of the elastic suspension. Therefore, it can be assumed that the process of loading the elastic suspension is quasistatic, and the static calculation of the strength and evaluation of the elastic characteristics of the device do not require correction.

5. Approbation of Analytical Results

To illustrate obtained results, we choose a plate spring of an elastic suspension with parameters $a = 0.03$ m, $b = 0.075$ m, $n = 12$, $E = 2.1\cdot 10^{11}$ Pa, and $\mu = 0.3$, which correspond to the real device. The valuation of the stress state and the strength of the working links of the shock absorber are shown in Figure 4. The dependencies of the maximum equivalent stresses on the thickness of the plate at different values of the external load are given here. The horizontal dashed line corresponds to the value of the permissible stresses $[\sigma]$ for the plate's material. To ensure the strength of the shock absorber, it is necessary that the condition $\sigma_{\text{eq}} \le [\sigma]$ is fulfilled. If the equivalent stress is equal to the permissible value for the chosen thickness of the plates, then the construction is operated with the coefficient stock −2. Thus, using the graphical dependencies given above and knowing the mechanical properties of the material of the working links of the plate spring, it is easy to evaluate their strength. For the manufacture of shock absorber plates, spring steel is used, for which yield strength is $\sigma_u = 1600$ MPa and permissible stress is $[\sigma] = 800$ MPa. If the expected range of maximum loads on the elastic suspension during its operation is not high, then cheaper steel can be used to design the working parts of the shock absorber.

Figure 5 shows the elastic characteristics of the plate spring of the shock absorber. There is the diagram of the submersion of the shock absorber from the external load at different thicknesses of the working plate package. It should be noted that the flexibility of the elastic suspension can be easily adjusted, to change the number of working links in the elastic element or to vary the thickness of the plate package. To extend the load range at which the device works efficiently, the working links of different thicknesses can be used, and if it is necessary for increasing the working capacity of the elastic suspension, it is a constructive possibility to include the working links in parallel operation.

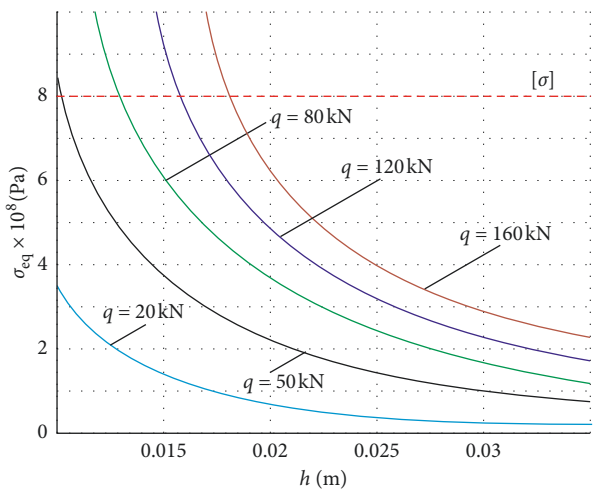

Figure 4: The dependency of the maximum equivalent stress on the thickness of the plate package at different loads on the shock absorber.

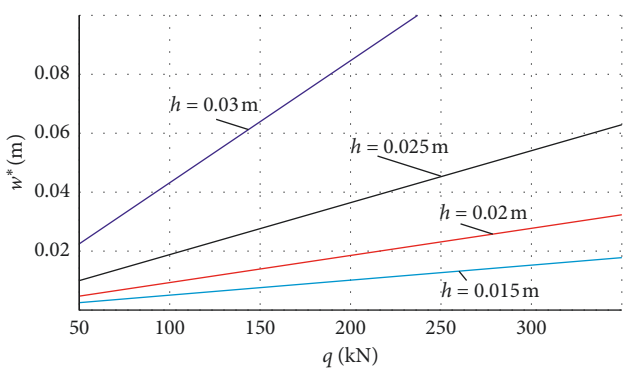

Figure 5: Diagram of the submersion of the elastic suspension from the external load at different thicknesses of the plate package.

6. Conclusions

Presented herein, the work proposes a new design of the plate shock absorber of the sucker-rod string.

The proposed design's peculiarity is thin plate package usage as the main bearing element of the device.

The package of round plates is modelled as a solid plate with equivalent cylindrical rigidity when mathematically modelled as the shock absorber. The equivalent cylindrical rigidity was specified to provide identification of deformable and tensile properties of the solid plate and the plate package. The abovementioned model will make possible to obtain analytical solutions of the problem and to give the results as simple engineering formulas that are convenient for practical use.

The work studied the most important performance characteristics of the shock absorber and evaluated its strength and rigidity. Numerical approbation of the obtained analytical results was carried out as the case of a plate elastic element.

In general, theoretical analysis results presented in this paper make possible to design the elastic suspension of the sucker-rod string to provide effective operation in all operating conditions. The particular scheme of plate spring is preference based on the specific design conditions, the permissible cost of the device, and the possibility of using the necessary materials under the specified operating conditions. The next stages of the study aim at bench and industrial testing of shock absorber's plate prototype.

Data Availability

The data used to support the findings of this study are included within the article.

Conflicts of Interest

The authors declare that they have no conflicts of interest.

References

[1] Z.-M. Feng, J.-J. Tan, Q. Li, and X. Fang, "A review of beam pumping energy-saving technologies," *Journal of Petroleum Exploration and Production Technology*, vol. 8, no. 1, pp. 299–311, 2018.

[2] C. Teodoriu and E. Pienknagura, "Bringing the sucker rod pumping unit into the classroom with the use of the internet of things," in *Proceedings of the Society of Petroleum Engineers Annual Technical Conference and Exhibition*, Dallas, TX, USA, September 2018, https://doi.org/10.2118/191552-MS.

[3] M. I. Khakimyanov, I. N. Shafikov, F. F. Khusainov, R. A. Semisynov, and E. A. Bezryadnova, "Monitoring of sucker-rod pump units as a result of the analysis wattmeter cards," *Journal of Physics: Conference Series*, vol. 803, p. 012066, 2017.

[4] Y. Zuo and X. Wu, "A comparative study of four rod load reduction techniques for deep-rod pumping," *Journal of Petroleum Exploration and Production Technology*, vol. 8, no. 2, pp. 475–483, 2018.

[5] G. V. L. Moises, S. F. A. Andrade, and A. C. B. Garcia, "Sucker-Rod Pumping Failures Diagnostic System," in *Proceedings of the Society of Petroleum Engineers Annual Technical Conference and Exhibition*, Florence, Italy, 2010.

[6] M. Yonggui, "The causes and prevention measures of stuck pump phenomenon of rod-pumped well in CBM field," *IOP Conference Series: Earth and Environmental Science*, vol. 113, p. 012076, 2018.

[7] A Special Report from Norris, Sucker Rod Failure Analysis, Brochure, V4, 2015.

[8] W. T. Qu, S. Y. Liu, and Z. S. Xu, "Research on corrosion rate of sucker rod steel 20Ni2Mo in Wet H_2S environment," *Materials Science Forum*, vol. 814, pp. 319–324, 2015.

[9] T. Ren, Z. Nan, W. Sun, and X. Kang, "Analysis method of sucker rod centralizer spacing in three-dimensional hole," in *Proceedings of the 5th international Conference on mechanical engineering, Materials and energy (5th ICMEME2016)*, vol. 90, pp. 163–167, Hong Kong, China, December 2016.

[10] M. Xing and S. Dong, "An improved longitudinal vibration model and dynamic characteristic of sucker rod string," *Journal of Vibroengineering*, vol. 16, no. 7, pp. 3432–3448, 2014.

[11] S. G. Gibbs, "Predicting the behavior of sucker-rod pumping systems," *Journal of Petroleum Technology*, vol. 15, no. 7, pp. 769–778, 1963.

[12] O. J. Romero and P. Almeida, "Numerical simulation of the sucker-rod pumping system," *Ingeniería e Investigación*, vol. 34, no. 3, pp. 4–11, 2014.

[13] J. J. DaCunha and S. Gibbs, "Modeling a finite-length sucker rod using the semi-infinite wave equation and a proof to Gibbs' conjecture," *SPE Journal*, vol. 14, no. 1, pp. 112–119, 2009.

[14] W. Li, S. Dong, and X. Sun, "An improved sucker rod pumping system model and swabbing parameters optimized design," *Mathematical Problems in Engineering*, vol. 2018, Article ID 4746210, 15 pages, 2018.

[15] T. Zhang and N. Zhang, "Vibration modes and the dynamic behaviour of a hydraulic plunger pump," *Shock and Vibration*, vol. 2016, Article ID 9679542, 7 pages, 2016.

[16] X. Gu, T. Li, Z. Liao, L. Yang, and L. Nie, "Modeling and optimization of beam pumping system based on intelligent computing for energy saving," *Journal of Applied Mathematics*, vol. 2014, p. 7, 2014.

[17] F. Zi-Ming, J.-J. Tan, Y. Sun, Z. De-Shi, and W.-B. Duan, "3D-Dynamic modelling and performance analysis of service behavior for beam pumping unit," *Mathematical Problems in Engineering*, vol. 2018, Article ID 9205251, 7 pages, 2018.

[18] Y. He, Y. Liu, S. Shao et al., "Application of CNN-LSTM in gradual changing fault diagnosis of rod pumping system," *Mathematical Problems in Engineering*, vol. 2019, Article ID 4203821, 9 pages, 2019.

[19] I. Steliga, J. Grydzhuk, and A. Dzhus, "An experimental and theoretical method of calculating the damping ratio of the sucker rod column oscillation," *Eastern-European Journal of Enterprise Technologies*, vol. 2, no. 7(80), pp. 20–25, 2016.

[20] M. Xing, "Response analysis of longitudinal vibration of sucker rod string considering rod buckling," *Advances in Engineering Software*, vol. 99, pp. 49–58, 2016.

[21] D. Wang and H. Liu, "Prediction and analysis of polished rod dynamometer card in sucker rod pumping system with wear," *Shock and Vibration*, vol. 2018, Article ID 4979405, 10 pages, 2018.

[22] L. Ropyak and V. Ostapovych, "Optimization of process parameters of chrome plating for providing quality indicators of reciprocating pumps parts," *Eastern-European Journal Of Enterprise Technologies*, vol. 2, no. 5(80), pp. 50–62, 2016.

[23] I. P. Shatskyi, L. Y. Ropyak, and M. V. Makoviichuk, "Strength optimization of a two-layer coating for the particular local loading conditions," *Strength of Materials*, vol. 48, no. 5, pp. 726–730, 2016.

[24] L. Y. Ropyak, I. P. Shatskyi, and M. V. Makoviichuk, "Influence of the oxide-layer thickness on the ceramic-aluminium coating resistance to indentation," *Metallofizika I Noveishie Tekhnologii*, vol. 39, no. 4, pp. 517–524, 2017.

[25] Y. Liang, T. Wang, X. Wang, W. Liang, and X. Liu, "Simulation research on hydraulic hybrid assistant beam pumping unit," *Proceedings of the Institution of Mechanical Engineers, Part C: Journal of Mechanical Engineering Science*, vol. 230, no. 11, pp. 1795–1804, 2016.

[26] A. S. Velichkovich, "Design features of shell springs for drilling dampers," *Chemical and Petroleum Engineering*, vol. 43, no. 7-8, pp. 458–461, 2007.

[27] A. S. Velichkovich, I. I. Popadyuk, and V. M. Shopa, "Experimental study of shell flexible component for drilling vibration damping devices," *Chemical and Petroleum Engineering*, vol. 46, no. 9-10, pp. 518–524, 2011.

[28] A. S. Velichkovich and T. M. Dalyak, "Assessment of stressed state and performance characteristics of jacketed spring with a cut for drill shock absorber," *Chemical and Petroleum Engineering*, vol. 51, no. 3-4, pp. 188–193, 2015.

[29] M. Dutkiewicz, I. Gołębiowska, I. Shatskyi, V. Shopa, and A. Velychkovych, "Some aspects of design and application of inertial dampers," *MATEC Web of Conferences*, vol. 178, p. 06010, 2018.

[30] I. Shatskyi, I. Popadyuk, and A. Velychkovych, "Hysteretic properties of shell dampers," in *Dynamical Systems in Applications. DSTA 2017. Springer Proceedings in Mathematics & Statistics*, J. Awrejcewicz, Ed., Vol. 249, Springer, Cham, Switzerland, 2018.

[31] I. Y. Popadyuk, I. P. Shats'kyi, V. M. Shopa, and A. S. Velychkovych, "Frictional interaction of a cylindrical shell with deformable filler under nonmonotonic loading," *Journal of Mathematical Sciences*, vol. 215, no. 2, pp. 243–253, 2016.

[32] I. P. Shatskii and V. V. Perepichka, "Shock-wave propagation in an elastic rod with a viscoplastic external resistance," *Journal of Applied Mechanics and Technical Physics*, vol. 54, no. 6, pp. 1016–1020, 2013.

[33] V. Kukhar, E. Balalayeva, and O. Nesterov, "Calculation method and simulation of work of the ring elastic compensator for sheet-forming," *MATEC Web of Conferences*, vol. 129, p. 01041, 2017.

[34] I. Shatskyi and V. Perepichka, "Problem of dynamics for an elastic rod with decreasing function of elastic-plastic external resistance," in *Dynamical Systems in Applications. DSTA 2017. Springer Proceedings in Mathematics & Statistics*, J. Awrejcewicz, Ed., Vol. 249, Springer, Cham, Switzerland, 2018.

[35] P. Vazouras, S. A. Karamanos, and P. Dakoulas, "Mechanical behavior of buried steel pipes crossing active strike-slip faults," *Soil Dynamics and Earthquake Engineering*, vol. 41, pp. 164–180, 2012.

[36] I. P. Shats'kyi and A. B. Struk, "Stressed state of pipeline in zones of soil local fracture," *Strength of Materials*, vol. 41, no. 5, pp. 548–553, 2009.

[37] D. A. Panevnik and A. S. Velichkovich, "Assessment of the stressed state of the casing of the above-bit hydroelevator," *Neftyanoe Khozyaystvo-Oil Industry*, vol. 1, pp. 70–73, 2017.

[38] I. P. Shats'kyi, O. M. Lyskanych, and V. A. Kornuta, "Combined deformation conditions for fatigue damage indicator and well-drilling tool joint," *Strength of Materials*, vol. 48, no. 3, pp. 469–472, 2016.

[39] X. Zhao, Q. Han, J. Zhang, D. Gao, and Y. Wang, "Development of the ZJZ type rod string absorber," *Hydraulics Pneumatics & Seals*, vol. 34, pp. 45–47, 2014.

[40] A. S. Velichkovich, "Shock absorber for oil-well sucker-rod pumping unit," *Chemical and Petroleum Engineering*, vol. 41, no. 9-10, pp. 544–546, 2005.

[41] F. D. Tsuru, "Effects of a cushioning device on dynamic forces exerted on conventional sucker rod pumping systems," in *Proceedings of the SPE Production Operations Symposium*, Oklahoma City, OK, USA, 1987.

[42] A. R. Valeev, A. N. Zotov, and S. A. Kharisov, "Application of disk springs for manufacturing vibration isolators with quasi-zero stiffness," *Chemical and Petroleum Engineering*, vol. 51, no. 3-4, pp. 194–200, 2015.

[43] Y. X. Wang, Z. J. Cui, H. P. Hu, C. C. Yin, and C. Y. Chen, "Study on an improved shock absorber used in the oil test pipe under impact load," *Journal of Mechanics*, vol. 24, no. 2, pp. 127–135, 2008.

[44] A. Velichkovich, T. Dalyak, and I. Petryk, "Slotted shell resilient elements for drilling shock absorbers," *Oil & Gas Science and Technology–Revue d'IFP Energies Nouvelles*, vol. 73, no. 34, pp. 1–8, 2018.

[45] A. S. Chepurnenko, B. M. Yazyev, and A. A. Savchenko, "Calculation for the circular plate on creep considering geometric nonlinearity," *Procedia Engineering*, vol. 150, pp. 1680–1685, 2016.