Hindawi
Shock and Vibration
Volume 2020, Article ID 8873353, 7 pages
https://doi.org/10.1155/2020/8873353

Research Article

Precision Improvement for the Detection of TGC via RBF Network

Yue Yan [1,2]

[1] *Chongqing Engineering Laboratory for Detection, Control and Integrated System, Chongqing Technology and Business University, Chongqing 400067, China*
[2] *College of Artificial Intelligence, Chongqing Technology and Business University, Chongqing 400067, China*

Correspondence should be addressed to Yue Yan; 1998042@email.ctbu.edu.cn

Received 21 June 2020; Revised 11 July 2020; Accepted 13 July 2020; Published 31 July 2020

Academic Editor: Chaoqun Duan

The approach of multipoint measurement, with increasing hardware cost, should no longer be adopted against the problem of low detection precision on the quality and concentration measurement of large-caliber or irregular pipeline gas with the single platinum film probe. Alternatively, the data correction and improvement can be carried out through establishing an RBF model to detect sample gas after preprocessing. Furthermore, the computer simulation and error analysis can be implemented by taking actual SO_2 data emitted by one medium-sized coal-fired power plant in China as a training sample. Hence, it can be shown that this approach on improvement and analysis of continuous monitoring of the systematic integrated error against the instrument correction and flue gas emission has feasibility, and the comprehensive average error is less than 0.6%.

1. Introduction

The nondispersive infrared gas concentration analyser based on the principle of platinum film is mainly applied to gas mass flow and concentration detection. It has a larger measurement range, a lower loss of pressure, and a relatively smaller size, and it has no consumption parts compared to electrochemical analysis instruments and spectrographic analysis instruments. Furthermore, it is easy to match with an integrated circuit. Therefore, it is suitable for extremely low gas monitoring and control, and it can be widely applied in the area of industrial gas testing. However, in the actual working environment, there are many difficulties in how to improve the gas concentration detection accuracy of large diameter or irregular pipeline. Taking the test of SO_2 vehicle emissions discharged by the thermal power plant as an example, the problems to be studied and solved are mainly reflected in the following aspects.

For the construction difficulty, according to GB/T 16157-1996 [1], "the sampling aperture of circular flue shall be located at mutually perpendicular diametrical lines in various measuring points." Meanwhile, "for chimney flue with the diameter which is greater than 4 m, homalographic cylinder number is 5, and the sampling number of test point is 10–20." Apart from the method of equal annular area, the common test point setting also includes the Chebyshev method and the log-linear method. In fact, the diameter of the exhausting chimney in large- and medium-scaled thermal power plants in China is currently above 8 m, and the height is 180–210 m. The test usually trepans on the chimney directly, close to the actual discharge, and the height of the sample gas gathering always exceeds 90 m. Hence, detection precision is increased through setting multiple detection points on equal ring sections, and this has large constructional difficulties and high equipment costs.

For the detection principle, the realization of mutual interference of multiple groups of gases in the processing environment will cause the loss or degeneration of principal component features, but this is unavoidable in the actual working environment.

For the actual process flow, at present, the detection technology does not fully consider the impact of coal quality on the detection accuracy. On the one hand, since the production areas and quality of coal are different, the content of SO_2 in the actual off-gas after combustion (before treatment

and purification) is approximately 20000 mg/m^3 to ~2000 mg/m^3, and it has a large fluctuation range and is very unstable. The actual working status of the exhaust gas purifying process equipment is greatly influenced by the condition of the hardware and the external environment. In consequence, the concentration fluctuation range of SO_2 gas entering into the chimney after purification treatment is still large; on the other hand, usually, the water content of exhaust gas discharged by the thermal power plant is 13%–15%. However, the continuous moisture absorption peak results in cross-interference of the absorption peak of multicomponent gas (zero moisture cannot be ensured in the actual working environment).

For the detection technology, the current detection technology does not consider the influence of the pretreatment system on detection accuracy. According to the emission standard of SO_2 in thermal power plants and other key regions is 35 mg/m^3 (standard state) [2]. This refers to the trace amount of SO_2 emitted into the atmosphere by thermal power plants after purification treatment. In fact, the off-gas discharged into the chimney by the thermal power plant is characterized by high temperatures (120°C to 50°C), high moisture content (13% to 15%), and high dust content (about 10 μm), and it contains corrosive gases and so on. In the actual working environment, the off-gas shall not be detected in the sensor directly after sampling. Meanwhile, the actual operating procedure of the whole process in the thermal power plant is not completely stable due to various factors such as coal product quality, burning temperature, and other procedure controls for achieving combustion quality of the product. As a consequence, the pressure, tar, benzene, naphthalene, moisture, fine particle, temperature, and gas flow rate of sample gases are different. Therefore, the preprocessing of sample gas shall be carried out to ensure that the typical sample gas can be obtained in the shortest retardation time. On the condition that the concentration of the tested gas is not lost, the state (temperature, pressure, flow, cleanliness, etc.) of the sample gas shall be suitable for the operating conditions required by the sensor. Hence, the representation and authenticity of the sample gas sent to the sensor after being processed by the sample processing system have a crucial influence on the ultimate detection accuracy. At the design stage, the atmospheric pressure, wind direction, geographic position, local climate, extreme climate, and other geographic information shall be taken into account in the CEMS (Continuous Emission Monitoring System) of the thermal power plant. These are specialized designs. Hence, it is difficult to accomplish quantitative error analysis assessment of the pretreatment system of the sample gas because the deviation caused by the pretreatment system of the sample gas cannot be estimated and revised with a mathematical model.

In addition, the current detection methods do not consider the interference of detection instruments and pretreatment system itself on the detection accuracy; for example, the platinum film probe has noise generated by the signal processing circuit and other random errors. It also exhibits temperature effect on zero and temperature drift of sensitivity, calibrated error, linearization error, error of signal processing circuit, and measuring error as a result of the temperature of the sample gas. The problems also including voltage fluctuation of the light source of trace amount and aged light of optical glasses still exist.

Therefore, SO_2 concentration detection interference in the thermal power plant mainly implies that the output value of concentration P is not only decided by one target parameter (the absorbed infrared energy, e); it is a multivariate function that is related to nontarget parameters, for instance, flow of sample gas (fr), noise of conditioning circuit (n), temperature (t), water content (w), calibrated error (c), various linear error (l), organic matter (o) (such as tar, benzene, and naphthalene), and others; namely,

$$P = f(fr, n, t, w, c, l, o, \ldots). \tag{1}$$

In recent years, neural networks have many applications in sensor signal processing, nonlinear correction, temperature compensation, and so on. BP (back propagation) neural network model has been brought into infrared temperature and humidity compensation [3, 4]. RBF (Radial Basis Function) neural network is applied to precision motion system [5] and neural network is used in the pressure analysis [6] and gas concentration measurement [7] in industrial environment; and a new method of Correction of Dynamic Errors of a Gas Sensor Based on Neural Network has been presented [8], etc. These studies adequately demonstrate that data fusion technology of sensor network on basis of neural network has effectiveness and super application prospect. However, there still exists great research space on multigroup gas analysis, comprehensive analysis, and processing of interference factors, normalization of gas sample, product engineering, and other directions under the constraints of hardware cost and construction condition.

The concentration measurement of large-caliber or irregular pipeline gas with the single platinum film probe has low-level detection precision, hardware cost shall be controlled, and constructional difficulties shall be reduced. Therefore, the method of combining the proceeding control of sample gas and data correction of neural network is adopted on the basis of existing analysers rather than simply enhancing the minimum range of the instrument. Further, test and effect analysis are also carried out through computer simulation in this study.

2. Materials and Methods

2.1. Description and Problem Formulation. According to the principle of consistency approximation of neural network, if it can ensure that the number of neurons in the hidden layer of surface web is plentiful enough or the deep network is deep enough, a surface web or deep network that approximates a nonlinear mapping at arbitrary precision will be found [9]. In consequence, the problems including analysis leakage with interference factor and mathematical modelling compensated by interference factor can be avoided through bringing neural network into error analysis and correction of thermal power plant based on the above analysis. The experimental model is shown in Figure 1. In this model, the

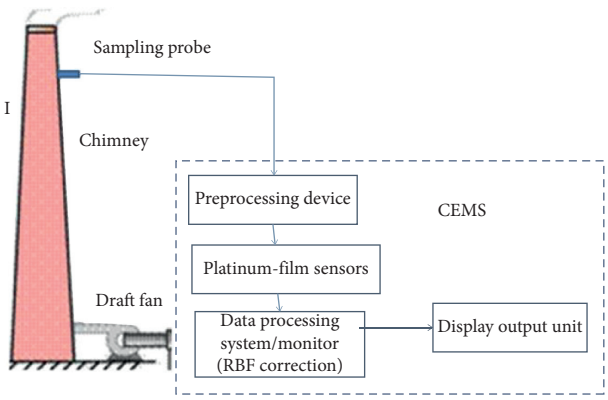

Figure 1: Schematic diagram of the experimental model.

preprocessed sample gas is sent to the platinum film sensor for concentration detection, and the data after detection are output after error correction of neural network.

The RBF neural network is selected to promote error performance by utilizing the characteristics of high convergence rate, strong self-learning ability, and easy achievement [10, 11]. Therefore, the generalization performance of the neural network will be enhanced, and misguidance of nonstandard training sample sets will be avoided. In the RBF network, a large number of neurons and other improved algorithms (genetic algorithm, PSO, etc.) can be utilized to further approximate system dynamics or precision [12]. However, this will definitely cause more complicated calculated load. The RBF network structure shall be simplified as far as possible under the premise of ensuring error precision, and the appropriate mean square error (MSE) shall be determined through experiment. Thus, the hardware-based design will be realized at a later period, and retardation time will also be shortened.

RBF network training data are actual data from the actual working environment. Numerous interference and custom attributes about gas concentration detection of the aforesaid thermal power plant shall be taken into full consideration rather than compensation of signal values detected by the sensor through adopting the function model calculation method and parameter calibration calculation method. Therefore, error improvement can be aimed at the performance of the whole CEMS.

2.2. Experiment and Experimental Data Specifications

2.2.1. Training Process Instructions. The network training process can be briefly described as follows. A single set of PA200 analysers provided by Chongqing Chuanyi Analytical Instrument Co., Ltd., shall be installed at the exhausting chimney of a large domestic thermal power plant (including the pretreatment device, and the mounting height is 90 m). The main relevant performance parameter indicators are linear error $\leq \pm 1\%$ FS (full range) and the minimum range of SO_2 of 0 to 0.01% (100 ppm). The network training is carried out by regarding 100 groups of actual test data from 2015 as the sample of RBF network training. Moreover, the method of computer simulation can be adopted to simulate 20 groups of experimental data under an equivalent process environment and for testing, evaluation, and analyses.

2.2.2. Training and Testing Sample Instructions. Under normal conditions, the temperature of the gas released from the thermal power plant after coal combustion is about 150°C, where the gas arrives at the exhausting chimney after processing through denitration, dust removal, desulfuration, and other environmental protection processes. The pretreatment system shall be set in the site environment to protect the sensitivity of the instrument. The systematic object is shown in Figure 2, and the structure is shown in Figure 3. The complete set is utilized with an instrument that can control the fluctuation range of temperature, dust particles, water content, and flow before the sample gas enters into the analysers. This practice also has the properties of high stability and low technique implementation cost.

According to the aforesaid interference factor analysis, water content, temperature, dust particles, flow, and output voltage are selected as sample input vectors of the neural network. The sensor that is applied to measure the corresponding interference factor is not installed in the field due to technique implementation cost. Through the pretreatment system, the sample gas has the following properties: temperature of 3°C–5°C, dust particle content of 0 to 0.5 μm, flow of 40 L/H–60 L/H, and water content <0.8. Hence, the value of the relevant zone can be determined by adopting a random generation mode of computer simulation with the fluctuation range.

In order to verify the trained RBF network characteristics, 20 groups of experimental data are generated in consideration of the multidimensional features of the sample data and with the method of two-dimensional interpolation, which is common in computer simulation as test samples for testing. Meanwhile, these data shall conform to the actual working environment of the thermal power plant and the equivalent interval (the range of water volume, temperature, dust particle, and flow is the input range of the pretreatment device for the sample gas, and the sensor output voltage is 300–800 mv). Furthermore, the mean square error, the absolute error, and the relative error can be determined on a performance analysis basis.

3. Simulations and Results

3.1. Training and Analysis of RBF. The basic starting point of this study is to simplify follow-up hardware design and control the cost. In consequence, the simplified RBF structure shall be selected.

An output layer and input vector are the above-mentioned 5×80 training sample data, a hidden layer, and output layer. Data normalization processing shall not be implemented. The adaptive adjustment of the threshold value shall not be carried out. The limiting number of neurons is 200. The training function is newrb (), of which the selection of the regression factor shall abide by the following algorithm.

Figure 2: Photograph of the preprocessing device.

For the orthogonality between $i \neq j$, m, and w_j, the energy of $y\ (t)$ is

$$y^T y = \sum g_i^2 w_i^T w_i + E^T E. \tag{2}$$

After eliminating its mean value, y refers to the vector of desired output, and the variance of $y\ (t)$ is

$$N^{-1} y^T y = N^{-1} \sum g_i^2 w_i^T + N^{-1} E^T E. \tag{3}$$

It is found that $\sum g_i^2 w_i^T$ desired output variance can be explained with the regression factor, so the compression ratio of error generated by w can be defined:

$$[\text{err}] = \frac{g_i^2 w^T w_i}{(y^T y)}, \quad 1 \leq i \leq M. \tag{4}$$

In terms of several optional regression factors, each regression factor has a corresponding compression ratio of error. The maximum compression ratio of error can be selected, and its corresponding regression factor is the final selected regression factor.

The unit of error margin is MSE (mean square error); relative error is defined as follows: (actual output of network–desired output)/desired output. When the MSE is set as $1e-3$, $1e-5$, $1e-10$, $1e-12$, and $1e-15$ and the simulation is carried out on the same computer, its time consumption, number of iterations, average relative error, and maximum relative error are as shown in Table 1.

3.2. Training and Analysis of BP

3.2.1. Using the Same Sample Training Data, the BP Neural Network Is Constructed for Comparison. The increasing number of hidden layers of BP neural network has no positive correlation with the improvement of system performance [13, 14]. To ensure hardware design as much as possible, there is only one hidden layer of the network. Trainlm function is the error return training function. Adopt batch training mode. The training of Levenberg-Marquardt direction propagation algorithm is selected.

To avoid the local minimum of BP neural network caused by training samples, the Adaboost.m1 algorithm based on boosting idea is used to concentrate on the weak learners with low prediction accuracy to improve accuracy.

When the number of neurons is 30, the MSE (mean squared error) value is as shown in Figure 4.

Besides, the best epochs value is 4, and the recognition accuracy (with the error range of 0.05 as the accurate recognition) is 92.5%.

Furthermore, 60-sample data are randomly selected from the same test set for testing, and the prediction error analysis is shown in Table 2.

It can be seen that the average relative error of BP neural network prediction is still less than 1%, but its overall performance is worse than the RBF network.

3.3. Further Analysis of RBF Network. According to the experimental data, the RBF network on data fitting of SO_2 gas shows superior performance and rate of convergence. Its average relative error precision is higher than the requirements of the existing 1%. When the precision requirements are relatively high (MSE decreases), the performance period of the RBF network will improve substantially, while the whole performance approaches a promising outcome.

When the error tolerance of MSE is $1e-15$, the network training process is as shown in Figure 5. When the iteration reaches up to 79 times, an evident MSE jump emerges. In consequence, the average relative error and maximum relative error increase. This is because the input sample vector components of the neural network are different types of data. Further combined with Table 1, under the premise of a certain number of training samples, the prediction accuracy of RBF network with the same structure will greatly increase the hardware cost, but the detection accuracy will not necessarily increase with the improvement of single error tolerance requirements and instability will even appear. From the perspective of overall performance, when MSE is $1e-5$, time consumption and error performance of the network are more appropriate for hardware design of the trace gas flow analyser.

Residual comparison of the test sample in the same group under the above five setting conditions is shown in Figure 6. It shows that when MSE is $1e-3$, error variation has a large interval range; when MSE is $1e-5$, the range of error variation reduces further. However, when MSE is $1e-10$, $1e-12$, and $1e-15$, the range of error variation is very close. Meanwhile, the residual values of error at a large number of test points almost coincide, and the residual error at a large number of test points is extremely low. The interval of error variation does not decrease and is even higher than that of the MSE of $1e-5$. Therefore, the MSE in the RBF network design should not be set too high. On the other hand, if the precision requirements are too high, it will be adverse to the hardware design, cost control, and stability of hardware from the perspective of hardware design.

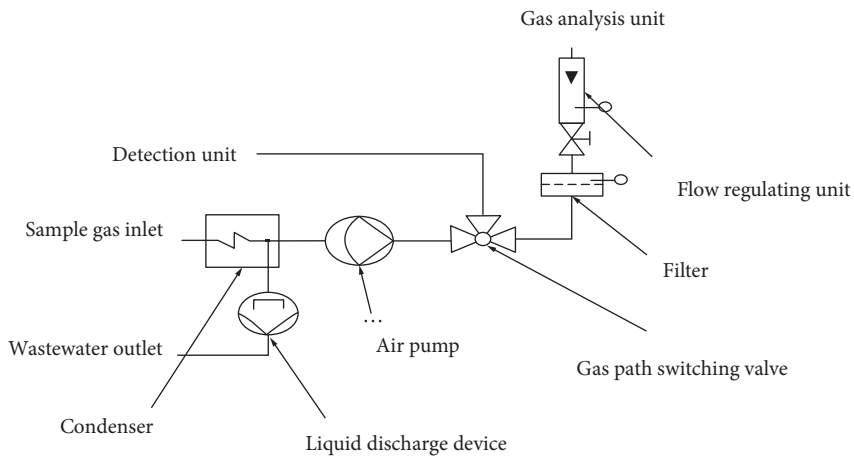

Figure 3: Structural diagram of the pretreatment device.

Table 1: Contrastive analysis under different MSE.

MSE	Number of iterations	Time consumption[1]	Average relative error[2]	Maximum relative error[3]
$1e-3$	29	6.6157	0.647	1.975
$1e-5$	43	9.389719	0.205	0.603
$1e-10$	80	15.741	0.074	0.939
$1e-12$	80	15.825	0.068	0.274
$1e-15$	80	15.885	0.200	2.225

[1] T refers to unit time on the same computer. [2] Average relative error is the average value of the relative error of all test data. [3] Maximum relative error is the maximum value of the relative error of all test data.

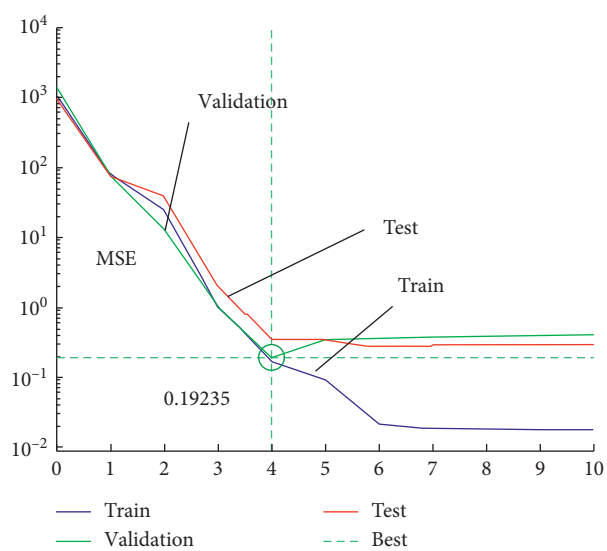

Figure 4: MSE of BP neural network.

Table 2: Prediction error analysis of BP.

Maximum absolute error (mg/m^3)	Minimum absolute error (mg/m^3)	Average absolute error (mg/m^3)	Maximum relative error (%)	Minimum absolute error (%)	Average relative error (%)
2.2493	0.2847	0.565	3.4	0.4358	0.8651

```
NEWRB, neurons = 72, MSE = 2.11374e-006
NEWRB, neurons = 73, MSE = 2.03644e-006
NEWRB, neurons = 74, MSE = 2.068e-006
NEWRB, neurons = 75, MSE = 2.16358e-006
NEWRB, neurons = 76, MSE = 2.16749e-006
NEWRB, neurons = 77, MSE = 2.16749e-006
NEWRB, neurons = 78, MSE = 2.16749e-006
NEWRB, neurons = 79, MSE = 0.00632624
NEWRB, neurons = 80, MSE = 5.25672e-007
```

Figure 5: Network training process.

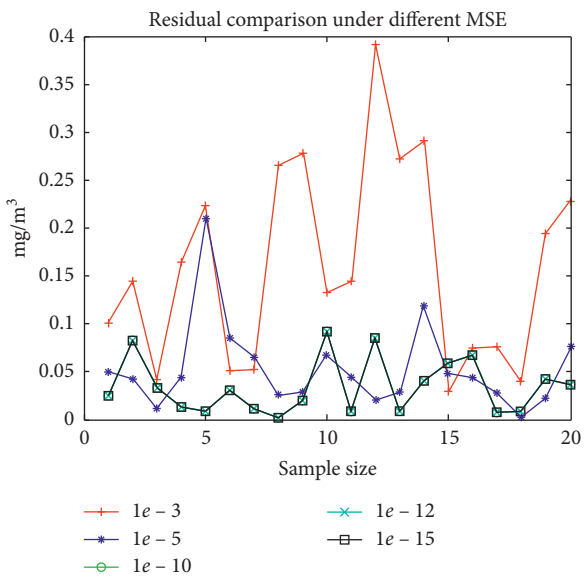

Figure 6: Residual comparison under different MSE.

4. Conclusions

From the perspective of multiple factors influencing concentration measurement of trace gas, an RBF neural network was designed in this study by regarding SO_2 concentration measurement of the thermal power plant as an example. Meanwhile, the training and simulation were carried out by adopting actual engineering environmental data to analyse and reveal its effectiveness. Small sample data acquisition and reasonable learning mechanism setting are the key to improvement. Because of the custom characteristics of the CEMS system, it is more scientific to collect sample data regularly from the site as a training sample. But how to determine the validity of the system model still needs further study. This method provides improvement ideas for quality and concentration measurement of large-caliber or irregular pipeline gas with the single platinum film probe. Using the writing characteristics of a single chip microcomputer, it can be reprogrammed on the basis of the existing hardware so as to improve the detection accuracy and automatic calibration of an analytical instrument in an actual working environment, and it allows performance improvement of the overall CEMS system.

Data Availability

The data used to support the findings of this study are available from the corresponding author.

Conflicts of Interest

The author declares that there are no conflicts of interest.

Acknowledgments

This study was supported by the research project of Chongqing Municipal Education Commission (Grant no. KJ1500639) and the research project of Chongqing Engineering Laboratory for Detection, Control and Integrated System (Grant no. KFJJ2018097).

References

[1] "National standard industry information service network ," 2017, http://www.freebz.net.

[2] National Development and Reform Commission, Beijing, China, 2017, http://www.sdpc.gov.cn/gzdt/201409/t20140919_626240.html.

[3] H. Wang, W. Zhang, L. You, G. Yuan, Y. Zhao, and Z. Jiang, "Back propagation neural network model for temperature and humidity compensation of a non dispersive infrared methane sensor," *Instrumentation Science & Technology*, vol. 41, no. 6, pp. 608–618, 2013.

[4] S. Ding and X. H. Chang, "Application of improved BP neural networks based on LM algorithm in characteristic curve fitting of fiber-optic micro-bend sensor," *Advanced Materials Research*, vol. 889–890, pp. 825–828, 2014.

[5] R. Yang, P. V. Er, Z. Wang, and K. K. Tan, "An RBF neural network approach towards precision motion system with selective sensor fusion," *Neurocomputing*, vol. 199, pp. 31–39, 2016.

[6] M. Dabiri, M. Ghafouri, H. R. R. Raftar, and T. Björk, "Neural network-based assessment of the stress concentration factor in a T-welded joint," *Journal of Constructional Steel Research*, vol. 128, pp. 567–578, 2017.

[7] S. Mohammadzadeh, H. Zargari, and M. A. Ghayyem, "The application of intelligent computation (artificial neural network-ANN) prediction of sweet gas concentration in a gas absorption column," *Energy Sources, Part A: Recovery, Utilization, and Environmental Effects*, vol. 37, no. 5, pp. 485–493, 2015.

[8] J. Roj, "Correction of dynamic errors of a gas sensor based on a parametric method and a neural network technique," *Sensors*, vol. 16, no. 8, p. 1267, 2016.

[9] G.-B. Huang, L. Chen, and C.-K. Siew, "Universal approximation using incremental constructive feedforward networks with random hidden nodes," *IEEE Transactions on Neural Networks*, vol. 17, no. 4, pp. 879–892, 2006.

[10] J. Nedbalek, "RBF neural networks for function approximation in dynamic modelling," *Journal of Konbin*, vol. 8, no. 1, pp. 223–232, 2008.

[11] W. Jia, D. Zhao, and L. Ding, "An optimized RBF neural network algorithm based on partial least squares and genetic algorithm for classification of small sample," *Applied Soft Computing*, vol. 48, pp. 373–384, 2016.

[12] H. Mirinejad and T. Inanc, "An RBF collocation method for solving optimal control problems," *Robotics and Autonomous Systems*, vol. 87, pp. 219–225, 2017.

[13] C. Dong, L. Dong, and M. Yang, "The application of the BP neural network in the nonlinear optimization," *Advancesin Intelligent and Soft Computing*, Springer, vol. 78, pp. 727–732, , Berlin, Germany, 2011.

[14] N. Izeboudjen, A. Bouridane, A. Farah, and H. Bessalah, "Application ofdesign reuse to artificial neural networks: case study ofthe back propagation algorithm," *Neural Computing and Applications*, vol. 21, no. 7, pp. 1–14, 2011.