International Scholarly Research Network
ISRN Renewable Energy
Volume 2012, Article ID 476702, 6 pages
doi:10.5402/2012/476702

Research Article

Energy Analysis of Baby Boiler for Steaming of Raw Cashew Nut Seeds

Atul Mohod, Y. P. Khandetod, S. H. Sengar, and H. Y. Shrirame

College of Agricultural Engineering and Technology, DBSKKV, Dapoli 415712, India

Correspondence should be addressed to Atul Mohod, agmohod@rediffmail.com

Received 28 May 2012; Accepted 30 July 2012

Academic Editors: S. Rahman and R. Xiao

The steaming of raw cashew seeds prior to shelling is adopted widely in small-scale cashew nut processing mills with the help of baby boiler. The wide variations in energy intensity of these mills reveal the scope for energy conservation. The baby boiler coupled with cooker commonly used for steaming of raw seeds was evaluated. The variation in steam pressure, temperature and operating time with respect to fuel was observed along with thermal efficiency of a boiler. The energy intensity to produce the steam using different fuel sources determined. The study revealed that the thermal efficiency of boiler using electricity as a fuel was higher (69.31%) as compared to 4.66% (Wood) and 4.47% (Cashew nut shell). It was observed that, the energy consumed per kg of cashew nut steaming using electricity (248.99 kJ/kg) was minimum followed by wood (3829.96 kJ/kg) and cashew nut shell (3835.64 kJ/kg). The variation of energy consumption for cashew nut steaming revealed the scope for energy conservation in biomass combustion system. The improvement in the biomass combustion efficiency for steam generation could results in less fuel consumption and shorter period.

1. Introduction

In the world scenario, India occupies a premier position contributing to about 43 per cent of the cashew nut (*Anacardium occidentale* L.) production [1]. Maharashtra has 164000 ha of area under cashew cultivation with average production of 1,97,000 tons of cashew nuts and attaining productivity of 1500 kg/ha [2].

India processed raw cashew nut seeds through 3650 cashew processing mills scattered in many states of country, which increased rapidly from 170 in 1959 to over 3650 in year 2008 providing employment to over 0.5 million people of which 95 percent are women. Maharashtra state has total 2200 cashew processing units out of which 1850 are small cottage mills mainly located in Konkan region (70°17′–74°31′E longitude and 15°37′–20°20′N latitude) of Maharashtra with 1, 31, 288 ha land area under cultivation producing 1, 92, 600 tons of raw cashew per annum [3].

Various processes involved in cashew nut processing are cleaning, drying, roasting or steaming, shelling and cutting, drying of kernels, peeling, grading, and packaging. Roasting method involves application of heat to the nut, which releases the nut shell liquid and makes the shell brittle which facilitates the extraction of the kernel when breaking the shell open [2].

The steaming of raw cashew seeds prior to shelling is adopted widely in small-scale cashew nut processing mills. The steaming of raw cashew seeds is carried out by indirect or direct method of boiling. The indirect method includes the steaming of cashew seeds in separate cooker, while the direct method includes the placing of cashew seeds at same place at which water is boiling [2].

The energy consumption in various forms for cashew nut processing plays an important role in industries with total energy intensity varied between 0.21 and 1.161 MJ/kg. The two identified energy intensive operations in cashew nut processing are cashew nut roasting or steaming and cashew nut drying and altogether accounting for over 85 percent of total energy consumption [4]. The boilers used for generation of steam are of various capacities depending upon the need of any processing unit, which consumes electricity and biomass as a fuel. The efficiency of a boiler reduces with operational time due to poor combustion, heat transfer surface fouling, and poor operation and maintenance. Even for a new boiler,

Table 1: Technical specification of indirect type of steam boiler.

S. N.	Parameters	Specification
(A)	Boiler	
(i)	Type	Indirect type baby boiler (Fire-in-tube)
(ii)	Water holding capacity	12 liters
(iii)	Fuel used	Electricity (3 kw, 1 Ø) and biomass
(iv)	Controls	Overflow, safety valve, pressure gauge, steam released valve
(B)	Cooker	
(i)	Type	Direct exposure type
(ii)	Capacity	60 kg of raw seeds
(iii)	Controls	Steam inlet valve, opening door, steam distributor, seed and condensate release door

reasons such as deteriorating fuel quality water quality and can result in poor boiler performance. Boiler efficiency tests help the cashew processing mills to find out the deviation of boiler efficiency from the best efficiency and target problem area for corrective action. The wide disparity in energy consumption to produce the same quantity of similar product due to variety of the fuel, installed capacity, production and percent utilization of the capacity reveals the scope for energy conservation. Keeping all this in view, the experimental study has been undertaken to study the thermal efficiency of a cashew nut steaming boiler and to estimate the energy consumption for cashew nut steaming.

2. Materials and Method

The small-scale cashew nut processing mills in the region employed different unit operations/methodology for processing of cashew nut. The general process flow chart for cashew processing adopted in the study area for cashew nut processing is described as follows and shown in Figure 1.

The energy-intensive operation in cashew nut processing, that is, steaming of raw cashew nut seed, was selected for the evaluation. Using indirect type of steam boiler the steaming of raw cashew nut seeds was carried out. The commonly used fire in tube type of baby boiler with separate cooker was used for the thermal evaluation. The technical specifications of the indirect type of steam boiler are summarized in Table 1. The baby boiler used for steaming of raw cashew nut seed was operated at the pressure of 4.5 kg/cm^2 and steam was released for 20 minutes over the raw cashew nut seed in the cooker. The schematic diagram of cashew nut steam boiler and cooker is shown in Figure 2.

2.1. Evaluation of Baby Boiler for Steaming of Cashew Nut Seeds. The baby boiler coupled with cooker commonly used for steaming of raw seeds was evaluated to produce the steam at a pressure of 4.5 kg/cm^2 using different fuels, namely, electricity, cashew nut shell, and fuel wood. The variation in steam pressure, temperature, and operating time with respect to fuel was observed along with thermal efficiency of a boiler using these fuels. The energy intensity to produce the steam using different fuel sources was determined.

2.2. Proximate Analysis of Fuel. The proximate analysis (fraction of mass of moisture, volatile, ash, and fixed carbon) of a sample of biomass (cashew nut shell and wood fuel) was carried out using the standard analytical procedures. The analysis of moisture was determined by the oven drying method (ASTM D-3173). The quantity of ash was determined according to ASTM D-3174. The fraction of volatile was determined according to ASTM D-3175. The fixed carbon was determined by difference. The higher heating value of solid fuels was determined by experiment of bomb calorimeter (ASTME-711) where the combustion was carried out in environment with high pressure of oxygen (to ensure complete combustion) saturated with steam of water (to ensure that all the water was formed in liquid).

2.3. Thermal Efficiency and Energy Intensity of Baby Boiler for Steaming. The efficiency testing of a baby boiler was evaluated by conducting three trials using each type of fuel, namely, electricity, wood fuel, and cashew nut shell. The baby boiler coupled with cooker commonly used for steaming of raw seeds was evaluated to produce the steam at a pressure of 4.5 kg/cm^2. The variation in steam pressure, temperature, and operating time with respect to fuel was observed along with thermal efficiency of a boiler using these fuels. The efficiency of a boiler was calculated as

$$\text{Efficiency of a boiler} = \frac{M \times C_P \times (t_2 - t_1) + (m \times \lambda)}{W \times C.V.} \times 100, \quad (1)$$

(i) heat input to the boiler = $W \times C.V.$,

(ii) heat output through temperature rise of water = $M \times C_p \times (t_2 - t_1)$,

(iii) heat output through water evaporation = $m \times \lambda$.

The energy consumption for cashew nut steaming was estimated in terms of kJ of energy required per kg of raw seed, which were steamed. The amount of energy (kJ) per unit weight of raw seed cooked was estimated by considering the holding capacity of the steam cooker (60 kg/batch) exposed for 20 minutes at the pressure of 4.5 kg/cm^2 and the amount of energy required to produce the steam. The energy intensity, that is, kJ/kg of raw cashew nut seeds steamed, was calculated for three different type of fuel that is, electricity, biomass (wood fuel), and cashew nut shell to identify the scope for conservation of energy.

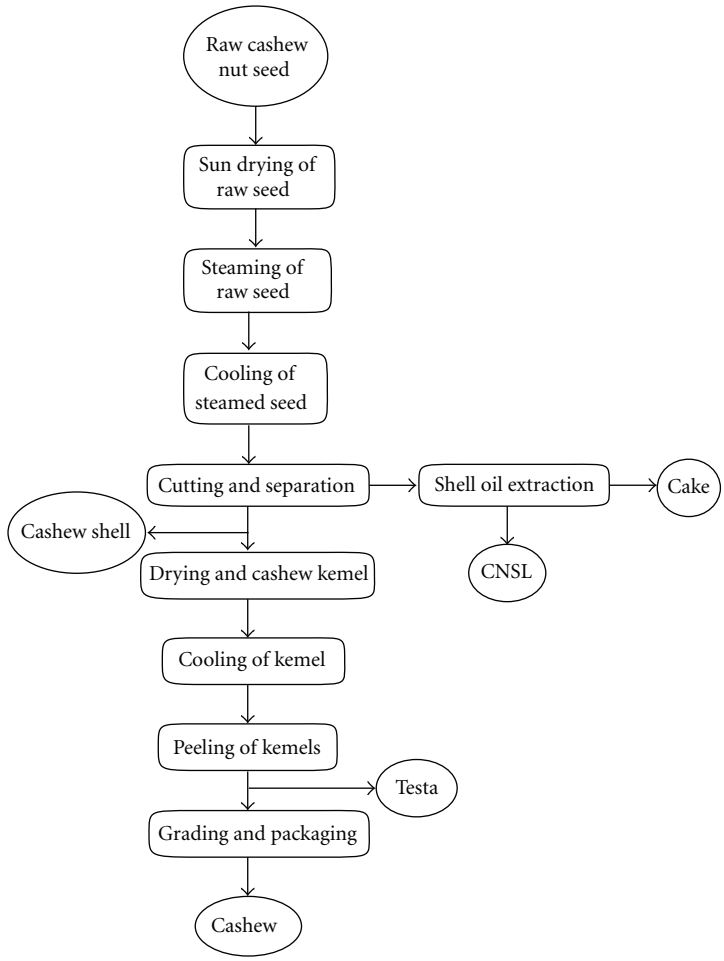

Figure 1: Flow chart of cashew nut processing in small-scale processing mills.

3. Results and Discussion

The baby boiler coupled with cooker commonly used for steaming of raw seeds was evaluated to produce the steam at a pressure of 4.5 kg/cm^2 using different fuels, namely, electricity, cashew nut shell, and fuel wood. The variation in steam pressure, temperature, and operating time with respect to fuel was observed along with thermal efficiency of a boiler using these fuels. The energy intensity to produce the steam using different fuel sources was determined.

3.1. Analysis of Fuel Used for Steaming. The proximate analysis of fuel, namely, cashew nut shell and fuel wood, was carried out. The results obtained are summarized in Table 2.

The heating value of fuel was determined using bomb calorimeter. The results obtained are summarized in Table 3.

The proximate analysis of fuel used for steaming of cashew nut showed its suitability for direct combustion with lower moisture content (<15%), high fixed carbon (>15%), and higher calorific value (>4000 kcal/kg). The heating value of cashew nut shell was found to be higher than fuel wood due to highly flammable oil content in the shell.

3.2. Evaluation of Baby Boiler for Steaming of Cashew Nut Seeds. The experimental trials of steam boiler using different fuels were carried out to test the different operating parameters of steam boiler. The variations of different operating parameters of steam boiler were discussed as follows.

3.3. Variation of Steam Pressure and Temperature. The variation of steam pressure generated inside the boiler with respect to operating time and type of fuel was observed. The result of average variation in steam pressure with respect to operating time and fuel is shown in Figure 3. The variation of steam temperature generated inside the boiler with respect to operating time and type of fuel was observed. The results of average variation of steam temperature with respect to operating time and fuel are shown in Figure 4.

The operating time required to achieve the pressure up to 4.5 kg/cm^2 varied according to type of fuel. It was observed that (Figure 3) the time required to generate the steam pressure up to 4.5 kg/cm^2 by using electricity as a source was 63 minutes, followed by cashew nut shell (144.3 minutes) and fuel wood (253 minutes). It is observed that during first few minutes using any type of fuel the heat was utilized to

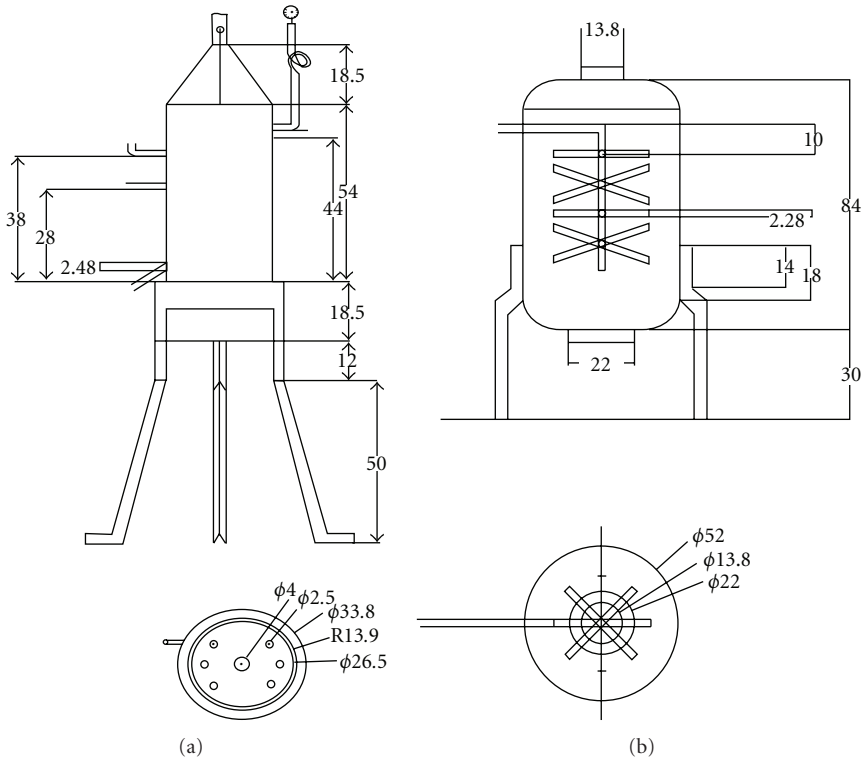

Figure 2: Schematic of baby boiler and cooker for cashew nut seed steaming.

Table 2: Proximate analysis of fuel for steaming.

Sr. no.	Type of fuel	Moisture content (%)	Volatile matter content (%)	Ash content (%)	Fixed carbon (%)
(1)	Cashew nut shell	9.32	69.68	1.9	19.1
(2)	Fuel wood	10.5	71.2	2.09	16.21

Table 3: Calorific value of fuel for steaming.

Sr. no.	Type of fuel	Calorific value (kcal/kg)
(1)	Cashew nut shell	5691.59
(2)	Fuel wood	4336.45

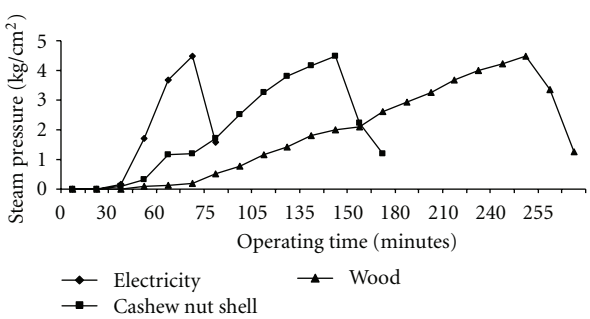

Figure 3: Variation of steam pressure with operating time using different fuels.

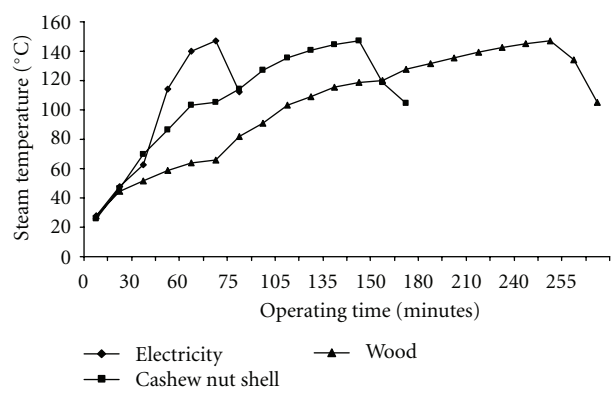

Figure 4: Variation of steam temperature with operating time using different fuels.

raise the temperature of water, that is, "sensible heat," and after the water reached up to boiling point, heat received by water from fuel was used as a "latent heat" where water was converted into the steam; hence initially all the three curves in Figure 4 are flatter. Once the water started boiling, its pressure increased and slope of curves increases as time has elapsed. From the Figure 4, it was observed that with increase in time, temperature inside the boiler was increased. Time required reaching the maximum temperature also varied

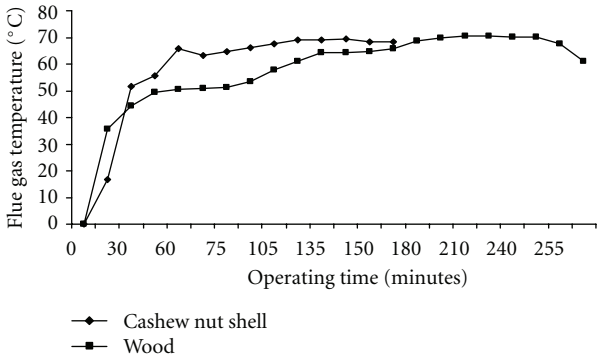

Figure 5: Variation of flue gas temperature with operating time using different fuels.

according to type of fuel. In case of electricity as a fuel for boiler, energy was available continuously, and loss of energy through flue gases was not a problem which was occurred in case of cashew nut shell and wood. Loss of heat or energy through flue gases which were discharged out of the boiler also caused the loss of heat energy, ultimately reducing the efficiency of boiler. In case of use of cashew nut shell and fuel wood, external factors such as wind velocity, rate of throwing of cashew nut shell inside the fuel chamber, or proper placing of fuel wood inside the fuel chamber were found to play an important role. High velocity wind caused the diversion of flame, and time required to produce the steam get increased. The variation of flue gas temperature with respect to operating time and type of fuel was observed. The results of average variation in flue gas temperature with respect to operating time and fuel are shown in Figure 5.

The temperature of a flue gas attained during the operation depends upon the intensity at which the fuel was burnt in the fuel chamber. When fuel was burnt, rapid increase in the flue gas temperature occurred; after that, graph shows almost constant temperature showing that its part of heat was utilized by the water so that water was converted into the steam.

3.4. Thermal Efficiency and Energy Intensity of Baby Boiler for Steaming. The variation of thermal efficiency of a boiler with respect to type of fuel was observed. The results of average variation in thermal efficiency with respect to fuel are shown in Figure 6. It was observed that the thermal efficiency of a boiler using electricity as a source for energy was found to be 69.31 percent while that of fuel wood was 4.66 percent and of cashew shell was 4.47 percent.

To produce approximately same amount of steam at a pressure of 4.5 kg/cm^2 only 14817.56 kJ of energy was needed by the use of electricity while it was about 230138.46 kJ and 229798.1471 kJ for cashew nut shell and fuel wood, respectively.

The energy consumption for cashew nut steaming was estimated in terms of kJ of energy required per kg of raw seed which were steamed using three types of fuel, namely, electricity, cashew nut shell, and wood (Table 4). The amount of energy (kJ) per unit weight of raw seed cooked was

Table 4: Energy consumption for cashew nut steaming.

Sr. no.	Type of fuel	kJ/kg of raw cashew seeds to be steamed
(1)	Electricity	246.95
(2)	Cashew nut shell	3835.64
(3)	Wood	3829.96

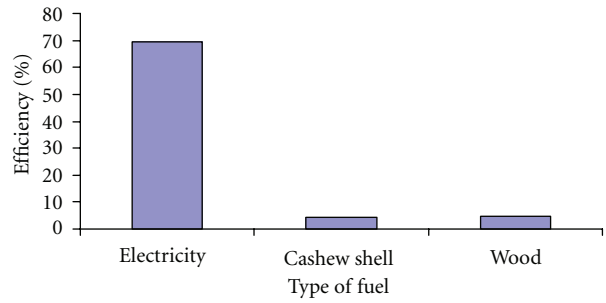

Figure 6: Variation of thermal efficiency of a boiler using different fuels.

estimated by considering the holding capacity of the steam cooker (60 kg/batch) exposed for 20 minutes at the pressure of 4.5 kg/cm^2 and the amount of energy required to produced the steam.

It was observed that the amount of energy required per kg of cashew nut steaming using electricity was found to be minimum (246.95 kJ/kg) followed by wood (3829.96 kJ/kg) and cashew nut shell (3835.64 kJ/kg). The variation of energy consumption for cashew nut steaming revealed the scope for energy conservation in biomass combustion system. The improvement in the biomass combustion efficiency for steam generation could result in less fuel consumption and shorter period.

4. Conclusions

Based on the results, the following conclusions could be drawn from the study.

(1) Thermal efficiency of boiler using electricity as a fuel was higher about 69.31 percent while that of wood was 4.66 percent and of cashew shell was 4.47 percent.

(2) The energy consumed per kg of cashew nut which is to be steamed using electricity was found to be minimum (246.95 kJ/kg), followed by wood (3829.96 kJ/kg) and cashew nut shell (3835.64 kJ/kg).

The variation of energy consumption for cashew nut steaming revealed the scope for energy conservation in biomass combustion system. The improvement in the biomass combustion efficiency for steam generation could result in less fuel consumption and shorter period.

References

[1] C. Indurani, V. Jegadeeswari, and T. Arumuganathan, "Science tech entrepreneurs," Extension Report, Directorate of Extension Education, TNAU, Coimbatore, India, 2007.

[2] Anonymous, "Bureau of energy efficiency," 2010, http://emt-india.com/Bee Exam/Guide Books/2g.
[3] A. Mohod, S. Jain, and A. G. Powar, "Energy option for small scale cashew nut processing in India," *Energy Research Journal*, vol. 1, no. 1, pp. 47–50, 2010.
[4] S. O. Jekayinfa and A. I. Bamgboye, "Estimating energy requirement in cashew (*Anacardium occidentale* L.) nut processing operations," *Energy*, vol. 31, no. 8-9, pp. 1305–1320, 2006.