International Scholarly Research Network
ISRN Geometry
Volume 2012, Article ID 685103, 27 pages
doi:10.5402/2012/685103

Research Article

On Fundamental Domains for Subgroups of Isometries Acting in $\mathbb{H}^n$

Antonio Lascurain Orive and Rubén Molina Hernández

Departamento de Matemáticas, Facultad de Ciencias, Universidad Nacional Autónoma de México (UNAM), 04510 Mexico, DF, Mexico

Correspondence should be addressed to Antonio Lascurain Orive, lasc@ciencias.unam.mx

Received 19 March 2012; Accepted 2 May 2012

Academic Editors: A. Fino and E. H. Saidi

Given $\mathcal{D}$ a fundamental polyhedron for the action of G, a classical *kleinian* group, acting in n-dimensional hyperbolic space, and Γ, a finite index subgroup of G, one obtains a fundamental domain for Γ pasting copies of $\mathcal{D}$ by a Schreier process. It also generalizes the side pairing generating theorem for exact or inexact polyhedra. It is proved as well that the general Möbius group acting in $\widehat{\mathbb{R}}^n$ is transitive on "k-spheres". Hence, describing the hyperbolic k-planes in the upper half space model intrinsically, and providing also an alternative proof of the transitive action on them. Some examples are given in detail, derived from the classical modular group and the Picard group.

1. Introduction

The action of Fuchsian (and Kleinian) groups in the hyperbolic plane (and space) has shown to be a central theme in several areas in mathematics, and some in physics, in the last one hundred years. In particular, the knowledge of fundamental domains is a powerful tool to understand the geometry and topology of the corresponding Riemann surfaces and hyperbolic 3-manifolds (or orbifolds).

There are several papers describing ways of constructing fundamental domains. Some of the classical constructions are referred to as the Dirichlet and Ford domains, see for instance [1]. Poincaré's theorem is perhaps the most important result of the subject, for a proof see [2]; also to see the usefulness of this result see for example [3]. In the particular case of modular subgroups, Kulkarni [4], using Farey sequences, showed a way to construct fundamental domains for some subgroups of the classical modular group. Also, one of us has constructed Ford domains for the Hecke congruence subgroups, see for instance [5]. There are many other

papers on the subject, we just mention another recent work for cyclic subgroups, appearing in [6].

It is quite interesting to place this geometrical studies of fundamental domains in the hyperbolic plane, or space, in a more general setting, say in the n-dimensional hyperbolic space. The book of Ratcliffe [7] makes a broad description of the action of discrete groups acting as isometries in $\mathbb{H}^n$. However, in several important results about fundamental polyhedra, he restricts to a particular case, namely, what he calls exact fundamental polyhedron, meaning that the *sides* of the polyhedron are *maximal* in the sense of being the biggest convex subsets in the boundary of the polyhedron, that are contained in hyperbolic $(n-1)$-planes, see [7, Chapter 6]. However inexact polyhedra are important in the literature and occur naturally, see for instance [3], see also Examples 7.1 and 7.2.

In this paper we first generalize a fundamental result, we prove that for all convex fundamental polyhedron, exact or inexact, the side pairing generates the group, Theorem 4.1. Ratcliffe [7, Theorem 6.7.3] only does it, in the exact case. This proof also provides a formal account of the brief analysis about this theorem appearing in Maskit's book [8]. We remark also that the existence of side pairings is part of the definition of fundamental polyhedra in [8]. In this paper, such hypothesis is a consequence of the fact that our domain is a convex fundamental polyhedron, that is, a locally finite convex fundamental domain (Lemma 2.3).

In the process we also generalize a theorem appearing in [1] that says that the action in $\widehat{\mathbb{R}}^n$ of the group of Möbius transformations is transitive in "spheres," where "sphere" means a codimension one sphere or plane. We actually proof that this group is transitive on "k-spheres," where a "k-sphere" is an affine subspace, or a sphere intersected with an affine subspace of dimension $k+1$ (Theorem 3.3). In particular, we get an intrinsic description of the hyperbolic k-planes in the upper half space model and provide an alternative proof (that does not use the hyperboloid model), of the transitive action on them, Corollaries 3.5, 3.6, and 3.7.

Given G an index k (finite) subgroup of a Fuchsian (or Kleinian) group Γ, and $\mathcal{R}$ a fundamental polygon for the action of Γ in the hyperbolic plane (or space), it is algebraically natural to construct a fundamental set for G by taking k copies of $\mathcal{R}$. However, the geometry of how to get a connected open set is not so simple. Moreover, even in dimension 2, apparently there is not a comprehensive general formal theorem or algorithm to describe the new domain (see [9–11]).

One of our main results states that given groups of isometries acting in hyperbolic n-space $\mathbb{H}^n$, $\Gamma < G$ (finite index k) and $\mathcal{P}$ a fundamental polyhedron for G, one gets a fundamental domain for Γ sewing k copies of $\mathcal{P}$, according to Schreier rules, Theorem 5.2.

We exhibit also some examples in dimension two and three derived from the two of the most important groups in mathematics, namely, the Picard group and its subgroup the classical modular group. Example 6.4 also appears in [9], though not explained in a complete formal way. The picture in Example 6.1 also appears in [10, page 258]. In general, the process shows that nonconvex domains may arise, see the details in Example 6.3. However, all our examples are not only fundamental domains but fundamental polygons or polyhedra. The last two examples (three dimensional) do not seem to appear elsewhere in the literature, it is quite interesting that these examples are inexact (in the sense of Ratcliffe), though they arise in a fairly natural way. Our motivation for the study of (3 dim.) fundamental domains is derived, in part, because, as Marden [12] writes "…provide "concrete" models of 3-manifolds…." Also, in the presence of elliptic elements of the orbifolds defined by them.

2. Preliminaries

We will be working in n-dimensional hyperbolic space, specifically, we will use the upper half space model:

$$\mathbb{H}^n = \{\overline{x} \in \mathbb{R}^n \mid \overline{x} = (x_1, x_2, \ldots, x_n), x_n > 0\}, \tag{2.1}$$

provided with the riemannian metric defined by

$$ds = \frac{|dx|}{x_n}. \tag{2.2}$$

It is well known that the group of isometries consists of the Poincaré's extensions of the group of Möbius transformations $GM(\widehat{\mathbb{R}}^{n-1})$ acting in $\widehat{\mathbb{R}}^{n-1}$, that is, any finite composition of reflections in "spheres" (spheres or planes) of codimension one in $\mathbb{R}^{n-1}$, see for instance [1, Chapter 3]. For the lower dimensional cases the conformal subgroups of isometries are $PSL(2,\mathbb{R})$ in dimension two and the Poincaré's extensions of $PSL(2,\mathbb{C})$ in dimension three.

There are several equivalent ways to give a topology to the general Möbius group acting in $\widehat{\mathbb{R}}^n$, $GM(\widehat{\mathbb{R}}^n)$, so that it becomes a topological group, one of them using the hyperboloid model, see [1, Chapter 3, Section 7]. Hence, it makes sense to call a subgroup G of $\widehat{GM}(\widehat{\mathbb{R}}^{n-1})$—Poincaré's extensions of $GM(\widehat{\mathbb{R}}^{n-1})$—discrete or not. Moreover, it can be proved that in all dimensions that discreteness is equivalent to a discontinuous action in $\mathbb{H}^n$, see for instance [7, Theorem 5.3.5].

Definition 2.1. Let G be a group of isometries acting in $\mathbb{H}^n$, a fundamental domain for the action of G is an open subset $\mathcal{R}$ of $\mathbb{H}^n$ such that

(1) any two points $x_1, x_2 \in \mathcal{R}$ are not G-equivalent,

(2) given $x \in \mathbb{H}^n$, there exist $y \in \widetilde{\mathcal{R}}$ and $T \in G$, such that $T(y) = x$, where $\widetilde{\mathcal{R}}$ denotes the closure of $\mathcal{R}$ in $\mathbb{H}^n$,

(3) $\partial\mathcal{R}$ has zero Lebesgue n-dimensional measure.

The fundamental domain $\mathcal{R}$ is called locally finite if any compact subset in $\mathbb{H}^n$ meets only a finite number of images of $\mathcal{R}$. The importance of this property is derived from the fact that for this domains, the quotient of $\mathbb{H}^n$ under the action of the group is homeomorphic to the corresponding quotient of the domain see [7, pages 237–239].

It turns out that a locally finite convex fundamental domain for a discrete group of isometries acting in $\mathbb{H}^n$ is of the form

$$\bigcap_{n\in\mathbb{N}} H_n, \tag{2.3}$$

where H_n are half spaces in $\mathbb{H}^n$, and such that only finitely many of them meet any compact set. For a proof of this fact we refer to Ratcliffe book pages 246-247. For this reason a locally finite convex fundamental domain $\mathcal{P}$ is called a convex fundamental polyhedron. In contrast with [7, page 247], we will take $\mathcal{P}$ to be an open set to match our discussion to domains or regions, which are open sets, as in the undergraduate courses.

After these results Ratcliffe's book restricts the discussion to "exact" convex fundamental polyhedra, that is when any maximal convex subset of the boundary is of the form

$$\tilde{p} \cap g\left(\tilde{p}\right), \tag{2.4}$$

where $\tilde{p}$ means closure of p in hyperbolic space. However, our results do not require the exactness condition, and a maximal convex subset in the boundary of $\tilde{p}$, say S might not be equal to a set of the form $\tilde{p} \cap g(\tilde{p})$, but perhaps a finite (or even numerable) family of these sets (see, for instance, [1, page 253]), that is,

$$S = \bigcup_{i \in I} \tilde{p} \cap g\left(\tilde{p}\right), \tag{2.5}$$

where I is finite or $I = \mathbb{N}$ and $\langle \tilde{p} \cap g(\tilde{p}) \rangle$ has dimension $n-1$ for each i, where $\langle \tilde{p} \cap g(\tilde{p}) \rangle$ means, as in [7], the smallest hyperbolic m-plane where $\tilde{p} \cap g(\tilde{p})$ lies (see [7, pages 131–137]).

Thereby, our definition of *side* of $\tilde{p}$ will be different to that one of Ratcliffe, as we will take our convex fundamental polyhedra not necessarily *exact*. The motivation of this more general point of view is that there are important examples in the literature of inexact polyhedra, see, for instance, [3].

Definition 2.2. A side of p is a set of the form

$$g\left(\tilde{p}\right) \cap \tilde{p}, \tag{2.6}$$

where the hyperbolic plane $\langle g(\tilde{p}) \cap \tilde{p} \rangle$ has dimension $n-1$.

We remark, in contrast with Maskit's book [8, page 69] that includes the side pairings as part of the definition of fundamental polyhedron, that this property is a consequence of being a convex fundamental polyhedron as proved in the next result.

Lemma 2.3. *Given p a convex fundamental polyhedron for a discrete group G of isometries acting in $\mathbb{H}^n$, there exists a side pairing, that is for every side s there exists a side s' and an element $g_s \in G$ such that $g_s(s) = s'$. It is also satisfied the following condition: $g_{s'} = g_s^{-1}$ and $(s')' = s$.*

Proof. If $s = g(\tilde{p}) \cap \tilde{p}$ is a side,

$$g^{-1}\left(\tilde{p}\right) \cap \tilde{p} \tag{2.7}$$

forms also part of the boundary of p, and since Möbius transformations that are Poincaré's extensions of elements in $GM(\widehat{\mathbb{R}}^{n-1})$ send any $n-1$-hyperbolic plane into another $n-1$-hyperbolic plane, see [1, pages 28–30]. It follows that the dimension of $\langle g^{-1}(\tilde{p}) \cap \tilde{p} \rangle$ is $n-1$, hence $g^{-1}(s)$ is a side of p. The other statements are straightforward. □

3. Hyperbolic k-Planes

We will adopt Ratcliffe's definition of hyperbolic k-plane, that is, in the hyperboloid model, the intersection of a $k+1$ dimensional time-like vector space of $\mathbb{R}^{n+1}$ with the hyperboloid see [7, page 70], and in the upper half space the corresponding image under the *canonical* isometry (via the ball model) see [7, page 137].

We introduce some notation, similar to the one used in Beardon's book [1, Chapter 3]. A sphere in $\mathbb{R}^n$ is a set of the form

$$S(a,r) = \{x \in \mathbb{R}^n \mid |x-a| = r\}, \quad a \in \mathbb{R}^n,\ r \in \mathbb{R}^+, \tag{3.1}$$

a plane is defined by

$$P(a,t) = \{x \in \mathbb{R}^n \mid x \cdot a = t\} \cup \{\infty\}, \tag{3.2}$$

where $a \in \mathbb{R}^n - \{0\}$, and $t \in \mathbb{R}$. The vector a is one of the normals to the plane.

We will call "sphere" in $\widehat{\mathbb{R}}^n$, to either a sphere or a plane of codimension one in $\widehat{\mathbb{R}}^n$, as above. Corollary 3.7 will provide a more natural definition for a k-sphere, though is very useful to proceed as follows.

Definition 3.1. A "k-sphere" in $\widehat{\mathbb{R}}^n$, $1 \le k \le n-1$ is the intersection of $n-k$ "spheres" which are orthogonal two by two and intersect in more that one point.

Definition 3.2. A "k-sphere" Σ^k is orthogonal to a sphere Σ provided that the $n-k$ "spheres" defining Σ^k are orthogonal to Σ.

As in Beardon's book [1] orthogonality of "spheres" is determined by the normals. Note that in general it is not always possible, in elementary terms to measure orthogonality with the tangent spaces, as there might not be enough space for the dimensions, so one has to use the normals in some cases.

Note that the general Möbius group $GM(\widehat{\mathbb{R}}^n)$ acting in $\widehat{\mathbb{R}}^n$ preserves the family of "k-spheres." This last follows because the transformations in this family preserve "spheres" and using the elegant inversive product, it can be proved that orthogonality is also preserved, see [1, pages 20–30].

Theorem 3.3. $GM(\widehat{\mathbb{R}}^n)$ *acts transitively on "k-spheres."*

Proof. Let $\Sigma^{k_1}, \Sigma^{k_2}$ be two "k-spheres." Using two Möbius transformations, one may suppose $\infty \in \Sigma^{k_i}$, $i = 1,2$. Take for instance reflections in spheres that pass through points in Σ^{k_i}, $i = 1,2$. We may also apply translations, which are Möbius transformations, and suppose, $0 \in \Sigma^{k_1} \cap \Sigma^{k_2}$. Then, it follows easily that Σ^{k_1} and Σ^{k_2} are vector spaces of dimension k. Moreover, by elementary linear algebra, there is an orthogonal transformation sending the normal vectors (which might be taking orthonormal) defining Σ^{k_1}, to those defining Σ^{k_2}. Thereby, if A is such orthogonal transformation, since $A \in GM(\widehat{\mathbb{R}}^n)$ and $A(\Sigma^{k_1}) = \Sigma^{k_2}$, the theorem follows. □

We remark that this result generalizes [1, Theorem 3.2.1, page 28].

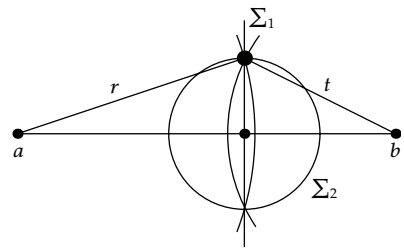

Figure 1: Proof of Lemma 3.4.

Lemma 3.4. *Given $\Sigma^k = \Sigma_1 \cap \Sigma_2 \cap \cdots \cap \Sigma_{n-k}$ a "k-sphere," such that does not contain ∞, Σ^k might also be expressed as*

$$\Sigma^{k+1} \cap \Sigma, \tag{3.3}$$

Σ^{k+1} is a affine space of dimension $k+1$ and Σ is a sphere (cod. 1), whose center is in Σ^k.

Proof. It is enough to prove that the intersection of two spheres, $S(a,r)$ and $S(b,t)$, can be expressed as $\Sigma_1 \cap \Sigma_2$, where Σ_1 is a plane and Σ_2 is a sphere whose center is in Σ_1. The proof of this fact follows from the Pythagorean theorem and the Euclidian cosine rule, by noting that the points in the intersection project always to the same point in the interval ab, see Figure 1. □

It should be clear now, that a convenient way to describe hyperbolic k-planes in $\mathbb{H}^n$, $k = 1, 2, \ldots, n-1$, is by the use of hemispheres and hemiplanes of dimension $n-1$ (codimension 1), which are orthogonal to $\widehat{\mathbb{R}}^{n-1}$.

It follows easily from [7, Theorem 4.6.3, page 137], that if M is a hyperbolic m-plane in $\mathbb{H}^n$, such that $\infty \in \overline{M}$ (where $\overline{M}$ denotes the euclidian closure in $\widehat{\mathbb{R}}^n$), one has that M is of the form

$$\{x \in \mathbb{H}^n \mid x = x_0 + t_1 v_1 + t_2 v_2 + \cdots + t_{m-1} v_{m-1} + t_n e_n\}, \tag{3.4}$$

where $t_i \in \mathbb{R}$, $1 \le i \le m-1$, $t_n > 0$, the collection of vectors $\{v_1, v_2, \ldots, v_{m-1}, e_n\}$ is orthonormal, and the nth coordinate of the vector x_0 is zero, that is x_0 lives in $\mathbb{R}^{n-1}$.

Observe that by completing $v_1, v_2, \ldots, v_{m-1}$ to an orthonormal basis of $\mathbb{R}^{n-1}$, one gets an orthonormal basis of $\mathbb{R}^n$ (with e_n). And, an easy calculation shows that

$$\{\infty\} \cup \langle M \rangle = \bigcap_{i=m}^{n-1} P\ (v_i, v_i \cdot x_0), \tag{3.5}$$

where $\langle M \rangle$ denotes the affine space in $\mathbb{R}^n$ defined by M.

Hence, M is the intersection in $\mathbb{H}^n$ of $n-k$ planes, all orthonormal among themselves and all orthogonal with $\mathbb{R}^{n-1}$. Orthogonality is measured, of course, with the normals. For example, a geodesic line in $\mathbb{H}^3$ is the intersection of two orthogonal geodesic planes in $\mathbb{H}^3$. Hence, M is a "k-sphere" orthogonal to $\widehat{\mathbb{R}}^{n-1}$.

Note that $GM(\widehat{\mathbb{R}}^{n-1})$ is transitive in points in $\widehat{\mathbb{R}}^{n-1}$, since we may use translations and reflections on spheres in $\mathbb{R}^{n-1}$ (now of dimension $n-2$) to send ∞ to any finite point. Thereby, if M is now a hyperbolic m-plane such that $\infty \notin M$, by picking a suitable $\varphi \in GM(\widehat{\mathbb{R}}^{n-1})$ such that sends a point of ∂M to ∞, one has that

$$\langle \widehat{\varphi}\ (M) \rangle \cup \{\infty\} = \bigcap_{i=1}^{n-m} \Sigma_i, \tag{3.6}$$

where Σ_i are planes as described in (3.5) above, and $\widehat{\varphi}$ is the Poincaré extension of φ. Consequently, since Möbius transformations are bijective, and preserve "spheres" and also the inversive product (hence orthogonality) (see [1, Chapter 3, pages 20–35]):

$$M = \mathbb{H}^n \bigcap \left(\bigcap_{i=1}^{n-m} \varphi^{-1}\ (\Sigma_i) \right). \tag{3.7}$$

Therefore, M is the intersection with $\mathbb{H}^n$ of $n-m$ "spheres" all orthogonal among themselves and all orthogonal with $\widehat{\mathbb{R}}^{n-1}$. And it is also a "$k$-sphere" intersected with $\mathbb{H}^n$.

So we get a simple proof of the transitivity of the general group of isometries in hyperbolic k-planes, different to the one in [7], that uses Lorentzian matrices.

Corollary 3.5. *The group $\widehat{GM}(\widehat{\mathbb{R}}^{n-1})$ (Poincaré's extensions of $GM(\widehat{\mathbb{R}}^{n-1})$) acts transitively on the family of hyperbolic k-planes.*

Corollary 3.6. *A hyperbolic k-plane in $\mathbb{H}^n$ is a "k-sphere" orthogonal to $\mathbb{R}^{n-1}$ intersected with $\mathbb{H}^n$.*

Corollary 3.7. *A hyperbolic k-plane in $\mathbb{H}^n$ is the intersection with $\mathbb{H}^n$, of either an affine k dimensional space orthogonal to $\mathbb{R}^{n-1}$, or the intersection of an affine space of dimension $k+1$ orthogonal to $\mathbb{R}^{n-1}$, with a sphere whose center is in the intersection of this affine space with $\mathbb{R}^{n-1}$.*

4. Side Pairing Generates

The following result extends Theorem 6.7.3, page 253 in Ratcliffe's book [7], since he only proves it for exact polyhedra. Maskit [8] actually gives an intuitive proof, also he assumes the existence of the side pairing as part of the definition of convex polyhedron.

Theorem 4.1. *Let G be a group of isometries acting in $\mathbb{H}^n$ and $\mathcal{P}$ a convex fundamental polyhedron for the action of G, then the side pairing transformations of $\mathcal{P}$ generate G. Including the case where $\mathcal{P}$ is inexact.*

We need a connectedness lemma before proving our result.

Lemma 4.2. *Assuming the hypothesis of the Theorem 4.1, if M denotes the subset of $\mathbb{H}^n$ consisting of the union of the boundaries of $\mathcal{P}$, and all its images, that are contained in hyperbolic k-planes, $k \leq n-2$, one has that for any $y \in \mathcal{P}$, $f \in G$, and $u \in f(\mathcal{P})$, there is a path in $\mathbb{H}^n - M$ joining y to u.*

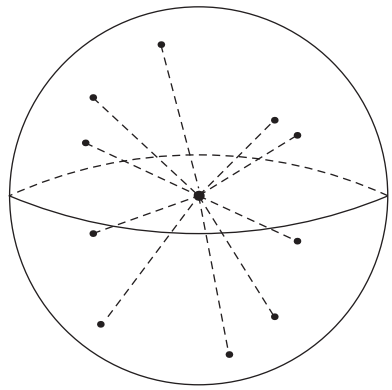

Figure 2: Schematic local picture of the $n-2$ dimensional boundaries.

Proof. Take γ the geodesic joining y and u, and an open cover of this curve with balls of the form $\{B(x,\varepsilon_x)\}, x \in \gamma$ such that each ball intersect finitely many polyhedra, and whenever a polyhedron meets $B(x,\varepsilon_x)$, it contains the point x, see Figure 2.

By compactness we may cover γ by finitely open balls

$$B(x_1,\varepsilon_{x_1}),\ldots,B(x_m,\varepsilon_{x_m}), \tag{4.1}$$

and it is clear that if we may connect by a path any two points in any one of the sets $B(x_j,\varepsilon_{x_j})-M$, $j=1,\ldots,m$, the lemma follows by transitivity, since the balls intersect in open sets, that is, if two balls intersect, they intersect in points that are not in M. Also, it is enough to consider only balls that intersect more than one polyhedron.

Now for a fixed $B(x_j,\varepsilon_{x_j})$ we take the complement of a smaller ball in it, for instance,

$$A_j = \left\{ x \in \mathbb{H}^n \mid \frac{\varepsilon_{x_j}}{2} < \rho(x,x_j) < \varepsilon_{x_j} \right\}, \tag{4.2}$$

where ρ denotes the hyperbolic distance.

We proceed by taking disjoint open tubular neighborhoods, of the same radius, say ϵ, of each of the components of $M \cap A_j$. This can be achieved, since there are a finite number of components of M in $M \cap A_j$, see Figure 3. A tubular neighborhood of a set B in $\mathbb{H}^n$ is a set of the form $\{x \in \mathbb{H}^n \mid \rho(x,B) < \epsilon\}$.

Now, let E be a component of $M \cap B(x_j,\epsilon)$, note that one may assume by maximality that $\dim\langle E\rangle = n-2$. Using Corollary 3.5, we may send $\langle E\rangle$ by an isometry $\widehat{\varphi}$, that is, a Poincaré's extension of a transformation $\varphi \in GM(\widehat{\mathbb{R}}^{n-1})$, to be the $(n-2)$-hyperbolic plane in $\mathbb{H}^n$, defined by

$$\Pi = \{x \in \mathbb{H}^n \mid [x]_1 = [x]_2 = 0\}, \tag{4.3}$$

see Figure 4.

The next step is to cover the set $\widehat{\varphi}(E \cap A_j)$ with a finite collection of Euclidian *cylinders* of the form $D_i^2 \times D_i^{n-2}$, $i = 1,\ldots,k$, where D_i^2 is an open two dimensional disc around

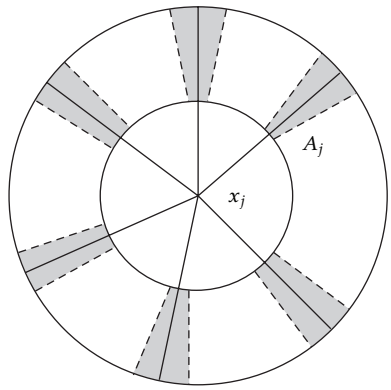

Figure 3: Schematic local picture near the vertices with tubular neighborhoods.

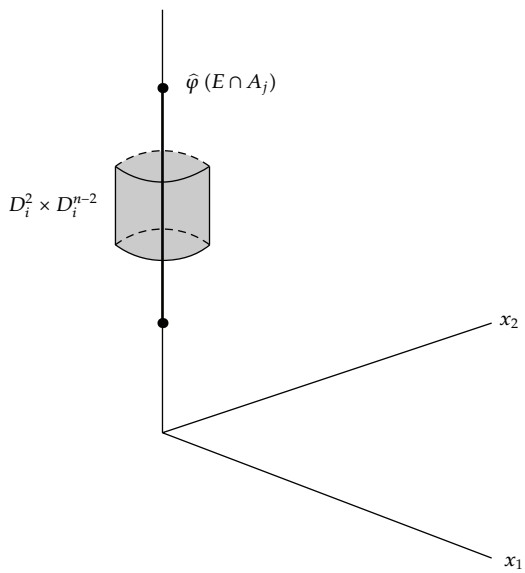

Figure 4: Avoiding the 2-*skeleton* in the boundaries.

the origin and D_i^{n-2}, an open $(n-2)$ dimensional disc, for each i, see Figure 4. Because of the compactness we may assume that these *cylinders* are contained in the image under $\widehat{\varphi}$ of the tubular neighborhood of $E \cap A_j$, and that

$$\bigcup_{i=1}^{k} D_i^2 \times D_i^{n-2} \tag{4.4}$$

is an open cover of the set $\widehat{\varphi}(E \cap A_j)$.

Although we are using now the Euclidian metric instead of the hyperbolic, this can be done by taking the image of the hyperbolic boundary of the tubular neighborhood, which is disjoint from $\widehat{\varphi}(E \cap A_j)$. Note that the image under $\widehat{\varphi}$ of the open tubular neighborhood is an open set in both metrics (since they define the same topology).

The sets $D_i^2 \times D_i^{n-2} - \widehat{\varphi}(\langle E \rangle)$ are path connected in the euclidian metric, since we may connect all points, using paths of the form $(r\cos\theta, r\sin\theta, x_3, \ldots, x_n)$, for sufficiently small r, or Euclidian convex combination segments. Thereby, they are also path connected in the hyperbolic metric (again, as both metrics define the same topology).

We can repeat this construction with all the components of $M \cap A_j$. Finally, because of the compactness of the hyperbolic closure of A_j, we may cover $A_j - M$ by a finite number of hyperbolic balls not meeting M, and a finite number of open sets that are the preimages of the euclidian perforated *cylinders* defined above. Since any of these sets is path connected, by transitivity $A_j - M$ is path connected. Moreover, by hyperbolic convexity $B(x_j, \varepsilon_{x_j}) - M$ is also path connected. □

Proof of the Theorem 4.1. Call G_0 the group generated by side pairing transformations. Given $f \in G$, we may select $y \in \mathcal{P}$ and $u \in f(\mathcal{P})$, it follows by virtue of the lemma that there exists a path γ in $\mathbb{H}^n$ joining y and u, such that does not intersect parts of the boundaries of $\mathcal{P}$, and its images, which are different to the relative interiors of the sides, in other words, γ does not meet $n-2$ dimensional *skeleton* in the boundaries of $\mathcal{P}$ and its images.

Clearly by local finiteness, γ only intersects a finite number of polyhedra, say

$$\tilde{\mathcal{P}} = h_0\left(\tilde{\mathcal{P}}\right), h_1\left(\tilde{\mathcal{P}}\right), \ldots, h_m\left(\tilde{\mathcal{P}}\right) = f\left(\tilde{\mathcal{P}}\right). \tag{4.5}$$

Certainly the curve γ may pass from two fixed polyhedron say $h_i(\tilde{\mathcal{P}})$ to $h_j(\tilde{\mathcal{P}})$ more than once, however, since

$$\gamma^{-1}\left(h_i\left(\tilde{\mathcal{P}}\right) \cap h_j\left(\tilde{\mathcal{P}}\right)\right) \tag{4.6}$$

is a compact set, and because $h_i(\tilde{\mathcal{P}})$ and $h_j(\tilde{\mathcal{P}})$ are convex, we may suppose by eliminating parts of γ, and renaming, that γ crosses at most once, from one fix polyhedron to another $h_j(\tilde{\mathcal{P}})$ in the collection $\{h_t(\tilde{\mathcal{P}})\}_{t=0}^m$.

Since this collection is finite, it is clear now that there is finite chain

$$\tilde{\mathcal{P}} = h_{t_0}\left(\tilde{\mathcal{P}}\right), h_{t_1}\left(\tilde{\mathcal{P}}\right), \ldots, h_{t_k}\left(\tilde{\mathcal{P}}\right) = f\left(\tilde{\mathcal{P}}\right), \tag{4.7}$$

so that each $h_{t_i}(\tilde{\mathcal{P}})$ is in the family (4.5), and $h_{t_j}(\tilde{\mathcal{P}})$ shares a side with $h_{t_j+1}(\tilde{\mathcal{P}})$ for all $j = 1, \ldots, k-1$. Finally, if $h_{t_j}(\tilde{\mathcal{P}}) \cap h_{t_j+1}(\tilde{\mathcal{P}})$ is a side

$$\widehat{\mathcal{P}} \cap h_{t_j}^{-1} h_{t_j+1}\left(\widehat{\mathcal{P}}\right) \tag{4.8}$$

is a side of $\widehat{\mathcal{P}}$, so $h_{t_j}^{-1} h_{t_j+1}$ is a side pairing generator of G_0 for all $j = 1, \ldots, k-1$. In particular h_{t_1} is a side pairing generator, and $h_{t_2} \in G_0$, since $h_{t_1}^{-1} h_{t_2}$ is a side pairing, inductively $h_{t_k} = f \in G_0$. □

5. Fundamental Polyhedra for Subgroups

In the following we consider an abstract group G with generators $g_1, \ldots, g_n$, and K a subgroup of finite index of G. Let $\{s_j\}_{j=1}^{m}$ be a complete system of representatives of right cosets of K in G, where each word s_j in the generators $g_1, \ldots, g_n$ is written in a reduced form. A complete set of representatives $\{s_j\}_{j=1}^{m}$ is called a *Schreier system*, if the initial segment of any word s_j, is also a representative. If a subgroup K has a given system of representatives and w is a word in G, the assignment $w \mapsto \overline{w}$, where $\overline{w}$ denotes the right coset representative of w, is called *a representative function of right cosets*. It is clear that $\overline{w} = 1$ if and only if $w \in K$, also $\overline{w} = \overline{v}$, if w and v are in the same right coset.

Assertion 1. $\overline{wv} = \overline{\overline{w}v}$.

Proof. It is enough to observe that the right coset $K(wv)$ and $K(\overline{w}v)$ are the same. To prove this, note first that

$$(wv)(\overline{w}v)^{-1} = w\overline{w}^{-1}. \tag{5.1}$$

Also, since $w \in K\overline{w}$, one has that $w = k\overline{w}$ for some $k \in K$, thereby

$$w\overline{w}^{-1} = k \in K. \tag{5.2}$$

□

The next result appears in [13, page 93], however for the sake of completeness we include a proof.

Theorem 5.1. *Let G be a group and K a proper finite index subgroup of G, then there exists a Schreier system of representatives of K.*

Proof . We construct a Schreier system of representatives of K in the following way. We may choose a representative for the coset K to be the empty word 1.

As the subgroup K is proper, there exists a generator g_1 of G such that $g_1 \notin K$. We denote by K_1 the right coset of g_1 and choose this element as the representative. If the index of K in G is 2, the proof is over.

Suppose that $[G : K] > 2$. We assert that there exists a generator $g_2 \neq g_1^{-1}$, such that $g_1 g_2 \notin K \cup K_1$. If $g_1 g_2 \in K \cup K_1$ for all generators g_2, then one has that all the words of length 3 are in $K \cup K_1$. This last arises, because by virtue of Assertion 1, one has that

$$\overline{g_1 g_2 g_3} = \overline{\overline{g_1 g_2} g_3} = \overline{g g_3}, \tag{5.3}$$

where $g = g_1$, o $g = 1$. It follows then by induction that all the words of length bigger than 3 are in $K \cup K_1$, thereby K has index 2, contradicting the hypothesis that $[G : K] > 2$. If K_2 is the right coset $g_1 g_2$, we may choose this last word as a representative of K_2. If $[G : K] = 3$ the proof is finished, otherwise we proceed inductively obtaining a Schreier system of representatives for K. □

We apply now these general results to our specific context, that is, a group G—and a finite index subgroup—of isometries acting in hyperbolic space, so that the side pairing transformations of a fundamental polyhedron generate G.

Theorem 5.2. *Let G be a group of isometries acting in $\mathbb{H}^n$, and $\mathcal{P}$ a convex fundamental polyhedron for the action of G. Suppose also, that K is a proper finite index subgroup of G. Then, there exists a Schreier system of right cosets representatives in G for K, determined by the side pairing generators, say*

$$f_1, f_2, \ldots, f_m, \tag{5.4}$$

so that, if

$$F = \bigcup_{i=1}^{m} f_i\left(\tilde{\mathcal{P}}\right), \tag{5.5}$$

one has that $\mathfrak{D} = (F)^\circ$ is a fundamental domain for K.

Proof. The existence of a such a Schreier system determined by the side pairing generators follows from Theorem 4.1. Now, given $x \in \mathbb{H}^n$, there exists $g \in G$ and $y \in \tilde{\mathcal{P}}$ such that $g(y) = x$. Also, g is of the form hf_i for an $i \in \{1, 2, \ldots, m\}$, and $h \in K$. Hence, $h(f_i(y)) = x$, and $x \sim f_i(y)$ in the subgroup K. Thereby, all orbits are represented in $\tilde{\mathfrak{D}}$. Note that some points that are not interior points of $\tilde{\mathcal{P}}$, become interior points of $\mathfrak{D}$, for instance points in the interior of the side shared by $\tilde{\mathcal{P}}$ and $f_1(\tilde{\mathcal{P}})$.

We show now that any two points $x, y \in \mathfrak{D}$ are not K-equivalent. Suppose there exists $\varphi \in K$ such that $\varphi(x) = y$, since $\mathcal{P}$ is locally finite, given a compact neighborhood N of x, for instance $\tilde{B}_\varepsilon(x) = \{u \in \mathbb{H}^n \mid \rho(x, u) \leq \varepsilon\}$, N intersects a finite number of images of $\mathcal{P}$, say by $f_{i_1}, \ldots, f_{i_t} \in G$. We may also assume that their closures contain x, and that each such transformation is a member in the collection $\{f_1, \ldots, f_m\}$. This might be achieved, because x is in the interior of

$$\bigcup_{i=1}^{m} f_i\left(\tilde{\mathcal{P}}\right), \tag{5.6}$$

so a sufficiently small neighborhood intersects only images of $\tilde{\mathcal{P}}$ of the form $f_i(\tilde{\mathcal{P}})$.

The same configuration arises for a small neighborhood of y, which may be taken as $\varphi\ (N)$. Call $f_{j_1}(\mathcal{P}), \ldots f_{j_t}(\mathcal{P})$ the images of $\mathcal{P}$ that intersect the neighborhood $\varphi(N)$. As above, we may assume that $f_{j_i} \in \{f_1, \ldots, f_m\}$ for all i.

Now, for some k and l, $1 \leq k \leq l \leq m$, one has that $\varphi\ (f_k(\tilde{\mathcal{P}})) = f_l(\tilde{\mathcal{P}})$. This follows because by pulling back the image by φ, of any one of the polyhedra around y, that intersect $\varphi(N)$, say $f_l(\tilde{\mathcal{P}})$, one gets a polyhedron around x intersecting N, say $f_k(\tilde{\mathcal{P}})$, So that $\varphi\ f_k = f_l$, $\varphi = f_l\ f_k^{-1}$. Since, $f_1, \ldots, f_m$ is a right coset system, and $\varphi \in K$, it follows that $l = k$, and $\varphi = Id$. □

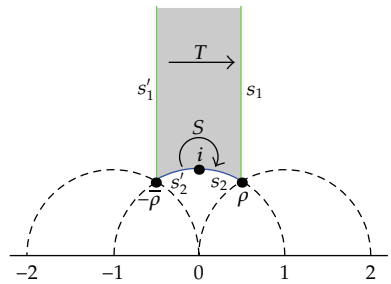

Figure 5: Fundamental domain for the classical modular group.

6. Two-Dimensional Examples

To illustrate our results in the Fuchsian case, it is convenient to recall the famous fundamental (Dirichlet, and Ford) domain for the classical modular group $PSL(2,\mathbb{Z})$, that is,

$$\mathcal{R} = \left\{ z \in \mathbb{H}^2 \mid |\mathrm{Re}(z)| < \frac{1}{2}, |z| > 1 \right\}, \tag{6.1}$$

see Figure 5. A proof of this fact appears, for instance, in [1, pages 229-230].

Of course, the sides are the geodesic arcs

$$\begin{aligned} s_1' &= \left\{ z \in \mathbb{H}^2 \mid \mathrm{Re}(z) = -\frac{1}{2}, |z| \geq 1 \right\}, \\ s_1 &= \left\{ z \in \mathbb{H}^2 \mid \mathrm{Re}(z) = \frac{1}{2}, |z| \geq 1 \right\}, \\ s_2' &= \left\{ z \in \mathbb{H}^2 \mid -\frac{1}{2} \leq \mathrm{Re}(z) \leq 0, |z| = 1 \right\}, \\ s_2 &= \left\{ z \in \mathbb{H}^2 \mid 0 \leq \mathrm{Re}(z) \leq \frac{1}{2}, |z| = 1 \right\}, \end{aligned} \tag{6.2}$$

and the vertices the points $\rho = 1/2 + i\sqrt{3}/2$, $-\overline{\rho}$, and i. The transformations pairings clearly are

$$T(z) = z + 1, \qquad S(z) = -\frac{1}{z}. \tag{6.3}$$

As a consequence of Theorem 4.1, the transformations S and T generate $PSL(2,\mathbb{Z})$.

Our 2-dimensional examples will be taken to be subgroups of the classical modular group which we will denote by Γ (either $PSL(2,\mathbb{Z})$ or $SL(2,\mathbb{Z})$). We will denote by the same symbol a modular transformation, or the corresponding matrix.

Example 6.1. Let Γ^2 be the subgroup generated by the squares of Γ. There is another description of Γ^2. We recall that Γ has a presentation given by

$$\left\langle T, S; S^2, (ST)^3 \right\rangle. \tag{6.4}$$

Given a word in Γ under this presentation, say $g_1 g_2 \cdots g_n$, $g_i = S, T, T^{-1}$, one defines the exponent sum in the obvious way, for instance $STST^{-7}$ has exponent sum -4. Hence, one may define the parity of a word (reduced or not) to be even or odd, if the exponent sum is even or odd. On the other hand, an element in Γ may be described by two different words, however one word is obtained from the other, by inserting or deleting a relator, or by inserting (or deleting) a symbol of the form TT^{-1} or $T^{-1}T$ (see [13, pages 12–15]). It follows then, since $(ST)^3$ has even parity, that the parity of an element in Γ is well defined. Under this definition, it is evident that all the elements in Γ^2 have even parity. To prove that both descriptions are the same, we use the following fact.

Assertion 2. $\Gamma = \Gamma^2 \cup \Gamma^2 T$.

Proof. Certainly, the union is disjoint, since the words in $\Gamma^2 T$ have odd parity. To prove the equality we use induction on the length of any element

$$\varphi = g_1 g_2 \cdots g_n \in \Gamma^2, \tag{6.5}$$

where $g_i = S$, T or T^{-1}, and the word $g_1 g_2 \cdots g_n$ is reduced.

If $n = 1$, one has that

$$S = \left(ST^{-1}\right)T \in \Gamma^2\ T, \tag{6.6}$$

this follows because $(ST)^3 = Id$ implies $ST^{-1} = (ST)^2$. Also

$$T^{-1} = (ST)^2 S \in \Gamma^2 T. \tag{6.7}$$

Assuming the assertion is true for the words of length $n-1$. Let $g_1 g_2 \cdots g_{n-1} g_n$, be a reduced word of length n. If $g_1 g_2 \cdots g_{n-1} \in \Gamma^2$, the assertion follows easily from the case $n = 1$. Otherwise, $g_1 g_2 \cdots g_{n-1} \notin \Gamma^2$, and by the induction hypothesis, it is of the form φT, where φ is an element in Γ^2. Finally, we just have to check for the case $g_n = S$, this follows because $TS = (ST^{-1})^2$. □

Consequently, Γ^2 consists exactly in all the words in the modular group which have even parity. In this example is clear from the assertion that the pair $\{Id, T\}$ is a Schreier system. Hence, it follows from Theorem 5.2 that a fundamental domain for Γ^2 is given by

$$\mathfrak{D} = \left(\tilde{\mathcal{R}} \cup T\left(\tilde{\mathcal{R}}\right)\right)^{\circ}, \tag{6.8}$$

see Figure 6. It also follows from Theorem 4.1 that Γ^2 is generated by T^2 and ST.

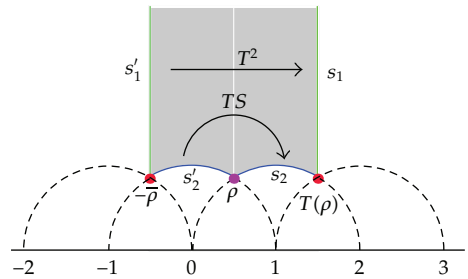

Figure 6: Fundamental region for Γ^2.

It is an interesting fact that Γ^2 is the only subgroup, of index two, of the classical modular group cf. [10, page 366]. We use the fact that for any convex fundamental polygon for a Fuchsian group, the angle sum of a cycle is

$$\frac{2\pi}{\operatorname{ord} c}, \tag{6.9}$$

where ord c is the order of the cycle (cf. [1, pages 221-222]). It then follows that Γ^2 has two elliptic classes of order three represented in $\widetilde{\mathfrak{D}}$ by ρ and $\{-\overline{\rho}, T(\rho)\}$.

It is well known that every Fuchsian group G acting in $\mathbb{H}^2$ defines a Riemann surface

$$S = \frac{\mathbb{H}^2}{G} = \left\{G(z) \mid z \in \mathbb{H}^2\right\}, \tag{6.10}$$

where $G\ (z)$ denotes the orbit of z, cf. [1, Chapter 6 and pages 206–210]. Moreover, one may include the cusps, and get a compact Riemann surface, see [14, pages 17–20]. We recall that the Euler characteristic of S denoted by χ is given by

$$\chi = 2 - 2g, \tag{6.11}$$

where g denotes the genus. Also, there is a result in basic algebraic topology which says that given X an spherical complex obtained from α_0 points by adjoining α_q cells of dimension q, $q = 1, \ldots, n$, one has that

$$\chi(X) = \sum_{q=0}^{n} (-1)^q \alpha_q, \tag{6.12}$$

cf. [15, page 101].

In the case of Γ^2, there is one cell, two sides, and three vertices (including the cusp). It follows then from (6.11) that the genus of the corresponding Riemann surface is zero, thereby the surface is a sphere with one cusp and two marked points of order three.

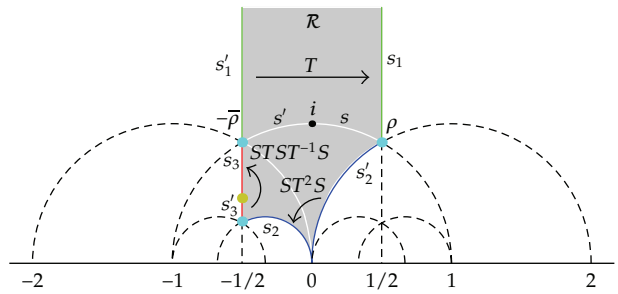

Figure 7: Fundamental domain for $\Gamma_0(2)$.

Example 6.2. We recall that the Hecke congruence subgroups are defined by

$$\Gamma_0(N) = \left\{ \begin{pmatrix} a & b \\ c & d \end{pmatrix} \in SL(2,\mathbb{Z}) \mid \begin{pmatrix} a & b \\ c & d \end{pmatrix} \equiv \begin{pmatrix} * & * \\ 0 & * \end{pmatrix} \bmod N \right\}. \tag{6.13}$$

It is well known that these subgroups (which are not normal) have index

$$[\Gamma : \Gamma_0(N)] = N \prod_{p|N} \left(1 + \frac{1}{p}\right), \tag{6.14}$$

see for instance [16, page 79].

We construct a fundamental domain for $\Gamma_0(2)$. It follows from (6.14) that the index $[\Gamma : \Gamma_0(2)]$ is equal to three. It is no difficult to check that a Schreier system of representatives for $\Gamma_0(2)$ is given by

$$\{Id, S, ST\}. \tag{6.15}$$

Thereby, it follows from Theorem 5.2 that

$$\mathfrak{D} = \left(\widetilde{\mathcal{R}} \cup S\left(\widetilde{\mathcal{R}}\right) \cup ST\left(\widetilde{\mathcal{R}}\right)\right)^{\circ} \tag{6.16}$$

is a fundamental domain for $\Gamma_0(2)$. One easily obtains that the region $\mathfrak{D}$ appears as in Figure 7. To see this, it is enough to locate $ST(\widetilde{\mathcal{R}})$. This can be done by noting that the image under S of the boundary of $T(\mathcal{R})$ is contained in the geodesics $[-1/2, \infty]$, $[0, -2]$, and $[0, -2/3]$, see Figure 8.

We refer to Figure 7 to obtain the pairing transformations. Clearly T is a generator. Note that $S(s_2') = s_1'$, and as above $ST(s_1) = s_2$. Therefore, the parabolic transformation

$$ST^2S, \tag{6.17}$$

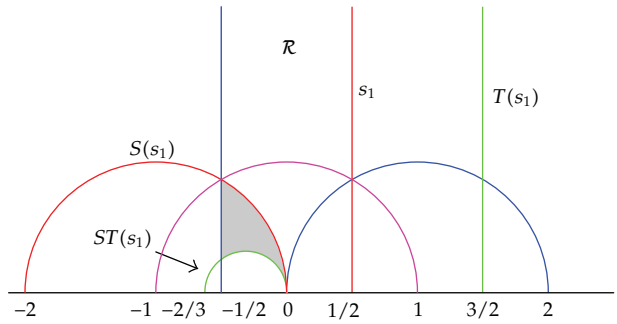

Figure 8: Image of $T(\mathcal{R})$ under S.

pairs the sides s_2' and s_2. An easy calculation shows that this transformation belongs to the subgroup. Observe also that

$$s_3 = S(T(s')), \qquad s_3' = S(T(s)). \tag{6.18}$$

Thereby, the elliptic transformation of order two $(ST)S(ST)^{-1}$ pairs s_3' and s_3. A calculation shows that this transformation belongs to $\Gamma_0(2)$. It follows then from Theorem 4.1 that

$$\left\{T, ST^{-2}S, (ST)S(ST)^{-1}\right\} \tag{6.19}$$

is a set of generators for $\Gamma_0(2)$. The corresponding Riemann surface has genus zero, since the number of cells is one, there are three sides and four vertices. Also, there are two cusps and a marked point of order two. Note that the cycle of vertices associated to ρ is accidental, since the angle sum is 2π, cf. [1, page 221].

Example 6.3. In a similar way to the previous example, we construct a fundamental domain for $\Gamma_0(3)$. Using (6.14), one has that $[\Gamma : \Gamma_0(3)] = 4$, hence we have to find a Schreier system with 4 elements, we may take the identity and S as the first two. Since $ST(z) = -1/(z+1)$ does not belong to the subgroup, one checks that it may be taken as another representative of the system.

The proof of the Schreier theorem suggests that we can take either one of the two representatives STS, or ST^2, as the last representative, indeed a calculation show that both elections yield a Schreier system. However, in order to get a convex region we choose ST^2 and choose our Schreier system to be

$$\left\{Id, S, ST, ST^2\right\}. \tag{6.20}$$

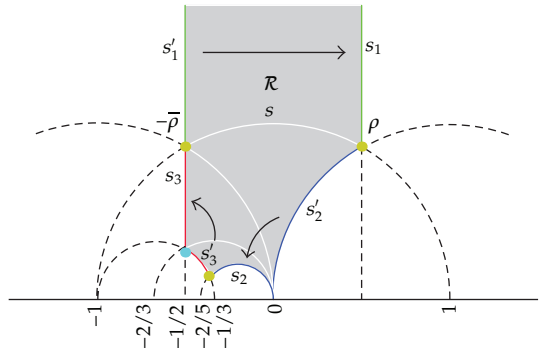

Figure 9: Fundamental domain for $\Gamma_0(3)$.

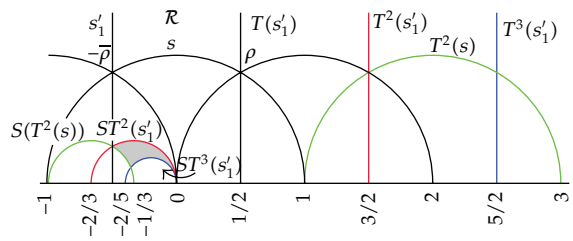

Figure 10: Image of $\mathcal{R}$ under ST^2.

Theorem 5.2 asserts that the fundamental domain for $\Gamma_0(3)$ is

$$\mathfrak{D} = \left(\tilde{\mathcal{R}} \cup S\left(\tilde{\mathcal{R}}\right) \cup ST(\tilde{\mathcal{R}}) \cup ST^2(\tilde{\mathcal{R}})\right)^{\circ}. \tag{6.21}$$

We claim that this region is the one described in Figure 9.

To show this we just have to find the image of $\mathcal{R}$ under ST^2. That is, one has to locate the image under S of the hyperbolic triangle define by the geodesics joining $3/2$ and $5/2$ with ∞, and the one joining 1 and 3. One gets, that such triangle is determined by the geodesics joining $-2/3$ and $-2/5$ with zero, and the geodesic joining -1 and $-1/3$, see Figure 10.

One of the obvious generators for $\Gamma_0(3)$ is T which pairs s_1' and s_1. To find the parabolic pairing of s_2' and s_2, using $s_2' = S(s_1')$, and $s_2 = S(T^3(s_1'))$, one gets

$$s_2 = ST^3S\left(s_2'\right). \tag{6.22}$$

Moreover, a calculation shows that $ST^3S \in \Gamma_0(3)$, thereby this map pairs s_2' and s_2 (see Figures 9 and 10).

Finally, the pairing of the sides s_3' and s_3 is a hyperbolic rotation of order three conjugate to ST^{-1}. Indeed, note that

$$s_3' = ST(T(s)), \qquad s_3 = STS(s), \tag{6.23}$$

where s as in Figure 9. Hence, since the rotation ST^{-1} around ρ sends $T(s)$ to s, one gets

$$s_3 = (ST)\left(ST^{-1}\right)(ST)^{-1}(s_3'). \tag{6.24}$$

A calculation also shows that

$$STST^{-2}S \in \Gamma_0(3). \tag{6.25}$$

One concludes that a set of generators for $\Gamma_0(3)$ is given by

$$\left\{T, ST^3S, STS\ T^{-2}S\right\}. \tag{6.26}$$

It also follows that $\Gamma_0(3)$ has two nonequivalent cusps, one elliptic class of order three and none of order two. Our domain has also an accidental cycle, that is, of vertices which are not fixed points, of course, the angle sum is 2π. Note also that the domain is not exact. Using again Euler's formula, the corresponding Riemann surface has genus zero, because there is one cell, the number of sides is three, and there are four vertices. See Figure 11.

We remark that in the last two examples a simpler exact polygon construction with no accidental vertices may be derived using the Ford domains cf. [5]. We conclude the 2-dimensional examples with a domain for the principal congruence subgroup $\Gamma[2]$.

Example 6.4. We obtain a fundamental domain for $\Gamma[2]$. The index of $\Gamma[2]$ with respect to the modular group is six, see for instance [14]. We may choose Id and T as the first two representatives of our system. Since $T^2 \in \Gamma[2]$ our next representative has to be TS. We choose TST as the fourth representative in our Schreier system. A calculation show that this last element does not belong to the subgroup and does not belong to the same right coset of the previous ones. We take as the next element $TSTS = ST^{-1}$. Clearly, this element does not belong to the subgroup. It is also easily checked that this transformation is not in the same right cosets of the previous ones. Our last choice is $TSTST = S$, other easy calculations allows to conclude that a Schreier system is given by

$$\{Id, T, TS, TST, TSTS, TSTST\}. \tag{6.27}$$

It follows then from Theorem 5.2 that a fundamental domain for $\Gamma[2]$ is the region

$$\mathfrak{D} = \left(\tilde{\mathcal{R}} \cup T\left(\tilde{\mathcal{R}}\right) \cup TS\left(\tilde{\mathcal{R}}\right) \cup TST\left(\tilde{\mathcal{R}}\right) \cup ST^{-1}\left(\tilde{\mathcal{R}}\right) \cup S\left(\tilde{\mathcal{R}}\right)\right)^{\circ}, \tag{6.28}$$

as it is shown in Figure 12.

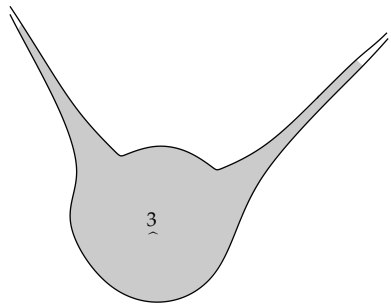

Figure 11: Riemann surface for $\Gamma_0(3)$.

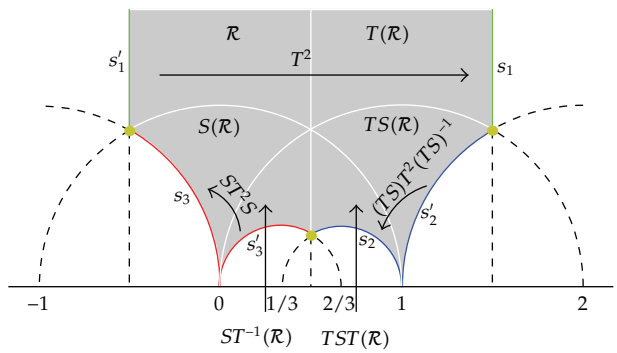

Figure 12: Fundamental region for $\Gamma[2]$.

To check this we just have to find the polygons $TST(\mathcal{R})$ and $(TS)^2(\mathcal{R})$. The first one can be derived from Figure 8. Since $(TS)^2 = ST^{-1}$, we just have to find the image of $\mathcal{R}$ under this last transformation. For this, note that $T^{-1}(\mathcal{R})$ is the triangle defined by the geodesics joining $-3/2$ and $-1/2$ with ∞, and the geodesic joining -2 and zero. Thereby, its image under S is the triangle determined by the geodesics joining 2 and $2/3$ to zero, and the geodesic joining ∞ and $1/2$, as described in Figure 12.

To conclude, we find the pairings and describe the corresponding Riemann surface. Clearly $T^2 \in \Gamma[2]$ pairs s_1' and s_1, as in Figure 12. The parabolic transformation that pairs s_2' and s_2 is given by

$$(TS)T^2(TS)^{-1}, \tag{6.29}$$

this follows because $s_2' = TS(s_1')$, and $s_2 = TS(s_1)$. Note also that $(TS)T^2(TS)^{-1}$ belongs to $\Gamma(2)$, since $\Gamma(2)$ is normal in Γ.

Finally, to find the parabolic transformations that pairs s_3' to s_3, one notes that

$$\begin{aligned} s_1' &= TS(s_3'), \\ s_3 &= ST^{-1}(s_1). \end{aligned} \tag{6.30}$$

Hence,

$$s_3 = (TS)^{-1}T^2(TS)(s_3'),$$
$$s_3 = ST^2S(s_3'). \tag{6.31}$$

This transformation belongs to $\Gamma(2)$ because of the normality.

One concludes from Theorem 4.1 that a set of generators for $\Gamma(2)$ is given by

$$\left\{T^2, (TS)T^2(TS)^{-1}, ST^2S\right\}. \tag{6.32}$$

Note that $\mathfrak{D}$ has an accidental cycle.

The corresponding Riemann surface is sphere with three cusps (Figure 13). This follows because using (6.11) the genus of the surface is zero, since there is one cell, three sides, and four vertices. In these examples, we are considering, of course, the compactified surfaces. We finally remark that that $\Gamma[2]$ is a free group of rank two, this follows easily from Theorem 4.1, and Poincaré's theorem.

7. Three-Dimensional Examples

For our three dimensional examples, we will use a fundamental domain for the Picard group derived from Poincaré's theorem, that appears in [17, pages 58-59], see Figure 14, we will denote it by $\mathcal{D}$.

The Picard group is the set of unimodular matrices in $SL(2,\mathbb{C})$ whose entries are gaussian integers, that is, elements of $\mathbb{Z}[i]$. Alternatively, it is the group of isometries acting in $\mathbb{H}^3$ determined by these matrices. We denote the Picard group by $\mathfrak{G}$. We denote the side pairing generators of $\mathcal{D}$ by S, T, U, and W, where the action of these transformations, in the extended complex plane, is given by

$$S(z) = -\frac{1}{z}, \qquad T(z) = z+1, \qquad U(z) = -z, \qquad W(z) = -z+i. \tag{7.1}$$

Note that the transformations S, U, and W act in hyperbolic space as half rotations around the axes determined by $\{-i, i\}$, $\{0,\infty\}$, and $\{i/2,\infty\}$, respectively. We will use the same symbol, for either, the transformation acting in the extended complex plane, or the matrix in $SL(2,\mathbb{C})$ that determines it, or the corresponding transformation acting in $\mathbb{H}^3$ (Poincaré extension). By looking for cycles of geodesic segments in the boundary of $\mathcal{D}$, that is, compositions of side pairings of $\mathcal{D}$ (strictly speaking, in a three-dimensional context, *face* pairing), that fix pointwise geodesic segments in the boundary of $\mathcal{D}$, one gets by virtue of Poincaré's theorem (cf. [8, page 75]) a set of relations of the Picard group, namely,

$$S^2 = U^2 = W^2 = (US)^2 = (TU)^2 = (TW)^2 = (WS)^3 = (TS)^3 = Id, \tag{7.2}$$

cf. [17, pages 58-59]. We remark that there is a misprint in the book of Maclachlan and Reid [17], the upper right entry in the matrix W should be 1 and not -1, since the polyhedron stands in the half space $\{(x,y,z) \in \mathbb{H}^3 \mid y \geq 0\}$.

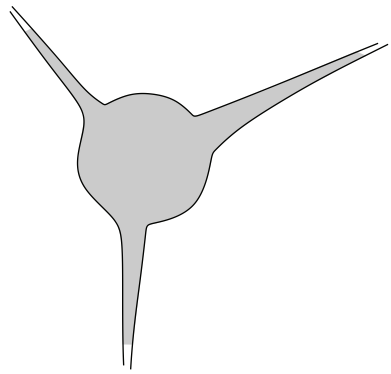

Figure 13: Riemann surface for $\Gamma(2)$.

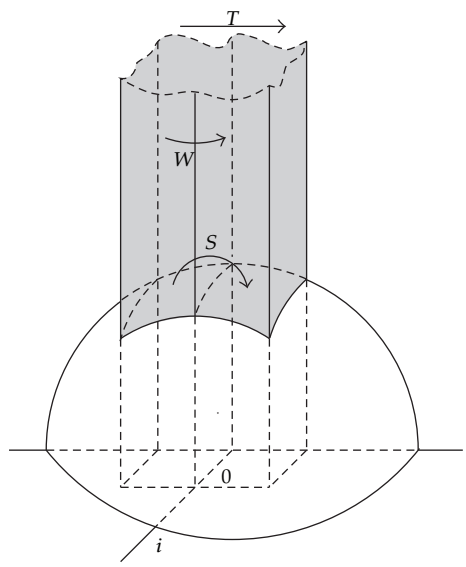

Figure 14: Fundamental polyhedron for the Picard group.

Example 7.1. We construct and index two subgroup by considering the subgroup of squares in $SL(2,\mathbb{Z})$. Namely, let

$$\Gamma_1 = \left\{T^2, ST, U, W\right\}. \tag{7.3}$$

By analyzing the intersections of Γ_1 with $SL(2,\mathbb{R})$, an induction argument of Γ_1 on the reduced words in the generators provides a formal proof that this group is indeed proper.

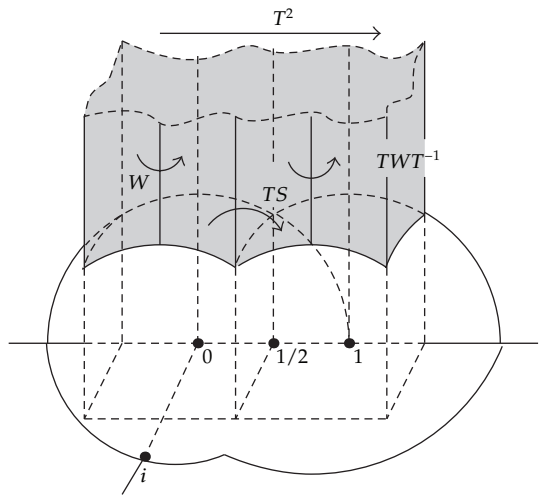

Figure 15: Fundamental domain for Γ_1.

It turns out that Γ_1 is an index two subgroup of $\mathfrak{G}$. This follows since

$$\mathfrak{G} = \Gamma_1 T \cup \Gamma_1, \tag{7.4}$$

where the union is disjoint. This follows by induction on reduced words on S, U, W and $T^{\pm 1}$. For words of length one, it is evident. Assuming the induction hypothesis, given

$$\omega = g_1 g_2 \cdots g_n, \tag{7.5}$$

a reduced word on the generators, one has that either $g_1 g_2 \cdots g_{n-1} \in \Gamma_1$, and the conclusion follows, or $g_1 g_2 \cdots g_{n-1} \in \Gamma_1 T$. In the latter case one gets subcases, depending if $g_n = T^{\pm 1}$, S, U, W. In the first three subcases $\omega \in \Gamma_1$. If $g_n = U$, since $TU = UT^{-1}$ one gets that $\omega \in \Gamma_1 T$, similarly if $g_n = W$. Since Γ_1 is a proper subgroup, $T \notin \Gamma_1$, and the union in (7.4) is disjoint.

Certainly, a Schreier system is given by $\{Id, T\}$. Thereby, a fundamental domain for Γ_1 is obtain as in Figure 15. Note that the domain is a convex fundamental polyhedron which is *inexact*. The side (*face*) pairing generators are given by W, T^2, TWT^{-1}, TS, U, TUT^{-1}.

Example 7.2. For our last example, we consider the ideal in $\mathbb{Z}[i]$ determined by the gaussian multiples of $1 + i$, that is, the gaussian numbers of the form:

$$(a + bi)(1 + i) = a - b + (a + b)i, \quad a, b \in \mathbb{Z}, \tag{7.6}$$

we denote by $\langle 1+i \rangle$, this ideal. Note that $\pm 1, \pm i$ are not elements of $\langle 1+i \rangle$, however $\pm 2 \in \langle 1+i \rangle$, since $(1 + i)(1 - i) = 2$.

Call Γ_2 the subgroup of $\mathfrak{G}$ defined by the matrices

$$\begin{pmatrix} a & b \\ c & d \end{pmatrix} \in \mathfrak{G}, \tag{7.7}$$

such that $c \in \langle 1+i \rangle$. A trivial calculation shows that Γ_2 is indeed a subgroup. We prove now that Γ_2 has index three in $\mathfrak{G}$. We claim that

$$\mathfrak{G} = \Gamma_2 \cup \Gamma_2 S \cup \Gamma_2 ST \tag{7.8}$$

is disjoint. These right cosets, indeed, do not intersect, since S, ST, and STS are determined by matrices of the form

$$\begin{pmatrix} * & * \\ \pm 1 & * \end{pmatrix}. \tag{7.9}$$

We use again an induction argument on reduced words to prove (7.8).

Since U, W, and T are elements of Γ_2, any word of length one is, either in Γ_2, or in $\Gamma_2 S$. Assuming that any reduced word $g_1 g_2 \cdots g_{n-1} \in \mathfrak{G}$ is an element of Γ_2, or $\Gamma_2 S$, or $\Gamma_2 ST$, we prove for reduced words of length n, say

$$\omega = g_1 g_2 \cdots g_n. \tag{7.10}$$

There are three cases according as $\omega_1 = g_1 g_2 \cdots g_{n-1}$ belongs to Γ_2, or to $\Gamma_s S$, or to $\Gamma_2 ST$. In the first one, it is easily seen that $\omega \in \Gamma_2$, or $\omega \in \Gamma_2 S$.

In the second case, $\omega_1 \in \Gamma_2 S$, we get subcases for $g_n = S, T^{\pm 1}, U, W$. If $g_n = S, \omega \in \Gamma_2$, if $g_n = T, \omega \in \Gamma_2 ST$. For the case $g_n = T^{-1}$, a calculation shows, that at the matrix level,

$$ST^{-1}(ST)^{-1} = \pm \begin{pmatrix} * & * \\ 2 & * \end{pmatrix}, \tag{7.11}$$

hence $\omega \in \Gamma_2 ST$. If $g_n = U$, since $SU = US$, $\omega \in \Gamma_2 S$. Finally, if $g_n = W$, a calculation shows that

$$SW(ST)^{-1} = \pm \begin{pmatrix} * & * \\ i-1 & * \end{pmatrix}, \tag{7.12}$$

thereby $\omega \in \Gamma_2 ST$.

It remains only to prove the case $\omega_1 \in \Gamma_2 ST$ that is $g_1 \cdots g_{n-1} \in \Gamma_2 ST$. We take subcases, if $g_n = T^{-1}, \omega \in \Gamma_2 S$. For $g_n = T$, a calculation yields

$$ST^2 S = \begin{pmatrix} * & * \\ 2 & * \end{pmatrix} \in \Gamma_2, \tag{7.13}$$

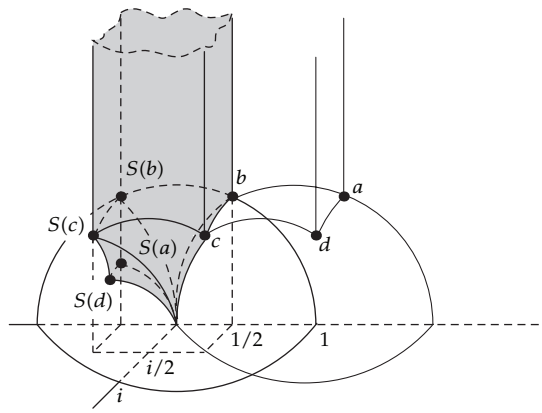

Figure 16: Fundamental domain for Γ_2.

so $\omega \in \Gamma_2 S$. For the next subcase, $g_n = S$, one gets that

$$(STS)(ST)^{-1} = \begin{pmatrix} * & * \\ 2 & * \end{pmatrix}, \tag{7.14}$$

and $\omega \in \Gamma_2 ST$. If $g_n = U$, one calculates

$$(STU)(ST)^{-1} = \begin{pmatrix} * & * \\ 2i & * \end{pmatrix} \in \Gamma_2, \tag{7.15}$$

getting $\omega \in \Gamma_2 ST$. Finally, if $g_n = W$

$$STWS = \begin{pmatrix} * & * \\ 1-i & * \end{pmatrix} \in \Gamma_2, \tag{7.16}$$

and $\omega \in \Gamma_2 S$.

Consequently, it follows from Theorem 4.1 that we may construct a fundamental domain, actually a polyhedron, for the subgroup Γ_2 of the Picard group by gluing properly three copies of the polyhedron $\mathcal{P}$, using the Schreier system $\{Id, S, ST\}$, as it appears in the Figure 16.

To see this, observe first that the action of S in the upper half space is the inversion on the unitary sphere, followed by the inversion on the yz plane. Note also that the action of the transformations S and T is the same in the upper half plane $\mathbb{H}^2$, and in the half plane xz. This follows because both actions are Poincaré's extensions of the same transformations in $GM(\widehat{\mathbb{R}})$.

Now, it is clear that the image of $\mathcal{P}$ under S is obtained by a half rotation around the geodesic $[i, -i]$ in $\mathbb{H}^3$, so the new polyhedron shares a side (*face*) with $\mathcal{P}$, but now is attached to the origin, see Figure 16. To visualize $ST(\mathcal{P})$ is less evident. Since, $\widehat{GM}(\widehat{\mathbb{R}}^2)$ are isometries and preserve geodesic planes, it will be sufficient to find the images of the vertices of the polyhedron $T(\mathcal{P})$ under S. Call these vertices a, b, c, d, and ∞, as in Figure 16. It is clear now that $S(b)$ and $S(c)$ are the images of b and c, respectively, under the inversion

in the yz plane. Also, using the fact of the action of S in the half plane xz is the same as in $\mathbb{H}^2$, one gets that $S(a)$ is located as appears in Figure 16 (see also Figure 9). Finally, the point d described in Figure 16 has coordinates $(3/2, 1/2, 1/\sqrt{2})$, and a calculation yields $S(d) = (-1/2, 1/6, 1/3\sqrt{2})$. Note, that he images of a, b, c, and d are in the plane, determined by the line $\operatorname{Re} z = -1/2$.

Our fundamental domain obtained for Γ_2 is actually a polyhedron, it has seven sides *faces* and is certainly inexact. The reader is invited to describe the side pairing, this can be done as in our other examples, by conjugations. Note also the amazing coincidence of our Schreier system for Γ_2, and our two-dimensional example for $\Gamma_0(2)$.

It also turns out, that an index six subgroup of $\mathfrak{G}$ is given by

$$\left\{ \begin{pmatrix} a & b \\ c & d \end{pmatrix} \in \mathfrak{G} \mid c, b \equiv 0 \bmod 1+i, a, c \equiv 1 \bmod (1+i) \right\}, \tag{7.17}$$

see [18]. Hence, this new group, thought as a transformation group, has index two in Γ_2.

On the other hand, writing UW (in the plane, the translation $z \mapsto z + i$), by f, one may think, comparing with our examples, that the subgroup of the Picard group, obtained by extending the modular group with the translation f^3, has finite index. However, this group has infinite index in the Picard group, since one may construct a fundamental domain for this subgroup of infinite volume, see [3]. It will be interesting to find out, what is the index of the extension of the modular group by the translation f^2, in the Picard group. Recent information of the Picard group, in relation with Jørgensen inequality, appears in [19].

References

[1] A. F. Beardon, *The Geometry of Discrete Groups*, vol. 91 of *Graduate Texts in Mathematics*, Springer, New York, NY, USA, 1995.

[2] D. B. A. Epstein and C. Petronio, "An exposition of Poincaré's polyhedron theorem," *L'Enseignement Mathématique, Revue Internationale. IIe Série*, vol. 40, no. 1-2, pp. 113–170, 1994.

[3] T. Jørgensen, A. Lascurain, and T. Pignataro, "Translation extensions of the classical modular group," *Complex Variables: Theory and Application*, vol. 19, no. 4, pp. 205–209, 1992.

[4] R. S. Kulkarni, "An arithmetic-geometric method in the study of the subgroups of the modular group," *American Journal of Mathematics*, vol. 113, no. 6, pp. 1053–1133, 1991.

[5] A. Lascurain Orive, "The shape of the Ford domains for $\Gamma_0(N)$," *Conformal Geometry and Dynamics*, vol. 3, pp. 1–23, 1999.

[6] T. A. Drumm and J. A. Poritz, "Ford and Dirichlet domains for cyclic subgroups of $PSL_2(\mathbb{C})$ acting on $\mathbb{H}^3_{\mathbb{R}}$ and $\partial\mathbb{H}^3_{\mathbb{R}}$," *Conformal Geometry and Dynamics*, vol. 3, pp. 116–150, 1999.

[7] J. G. Ratcliffe, *Foundations of Hyperbolic Manifolds*, vol. 149 of *Graduate Texts in Mathematics*, Springer, New York, NY, USA, 1994.

[8] B. Maskit, *Kleinian Groups*, vol. 287 of *Grundlehren der Mathematischen Wissenschaften*, Springer, Berlin, Germany, 1988.

[9] G. A. Jones and D. Singerman, *Complex Functions. An Algebraic and Geometric View Point*, Cambridge University Press, Cambridge, UK, 1987.

[10] J. Lehner, *Discontinuous Groups and Automorphic Functions*, Mathematical Surveys No. 8, American Mathematical Society, Providence, RI, USA, 1964.

[11] W. Magnus, *Non Euclidean Tesselations and Their Groups*, Academic Press, 1974.

[12] A. Marden, *Outer Circles*, Cambridge University Press, Cambridge, UK, 2007.

[13] W. Magnus, A. Karrass, and D. Solitar, *Combinatorial Group Theory*, Dover Publications, New York, NY, USA, 1976.

[14] G. Shimura, *Introduction to the Arithmetic Theory of Automorphic Functions*, vol. 11 of *Publications of the Mathematical Society of Japan*, Princeton University Press, Princeton, NJ, USA, 1994.

[15] M. J. Greenberg, *Lectures on Algebraic Topology*, W. A. Benjamin, New York, NY, USA, 1967.
[16] B. Schoeneberg, *Elliptic Modular Functions. An Introduction*, Springer, New York, NY, USA, 1974.
[17] C. Maclachlan and A. W. Reid, *The Arithmetic of Hyperbolic 3-Manifolds*, vol. 219 of *Graduate Texts in Mathematics*, Springer, New York, NY, USA, 2003.
[18] B. Fine, "Congruence subgroups of the Picard group," *Canadian Journal of Mathematics*, vol. 32, no. 6, pp. 1474–1481, 1980.
[19] F. González-Acuña and A. Ramírez, "Jørgensen subgroups of the Picard group," *Osaka Journal of Mathematics*, vol. 44, pp. 471–482, 2007.