Hindawi Publishing Corporation
Geometry
Volume 2013, Article ID 549198, 9 pages
http://dx.doi.org/10.1155/2013/549198

Research Article

Cyclic Branched Coverings Over Some Classes of (1,1)-Knots

Agnese Ilaria Telloni

Dipartimento di Matematica, Università di Modena e Reggio E., Via Campi 213/B, 41100 Modena, Italy

Correspondence should be addressed to Agnese Ilaria Telloni; agneseilaria.telloni@unimore.it

Received 19 October 2012; Revised 12 March 2013; Accepted 18 March 2013

Academic Editor: Michel Planat

We construct a 4-parametric family of combinatorial closed 3-manifolds, obtained by glueing together in pairs the boundary faces of polyhedral 3-balls. Then, we obtain geometric presentations of the fundamental groups of these manifolds and determine the corresponding split extension groups. Finally, we prove that the considered manifolds are cyclic coverings of the 3-sphere branched over well-specified $(1,1)$-knots, including torus knots and Montesinos knots.

1. Introduction

In this paper, we study the topological and covering properties of a class of closed connected orientable 3-manifold $M(n,k,r,q)$, depending on four nonnegative integer parameters n, k, r, q such that $n \geq 2$, $r \geq 2$, $k < n$, and $q \geq 0$. These manifolds are constructed from triangulated 3-cells, whose boundary faces are identified together in pairs. Then, we obtain finite n-generator and n-relator presentations for the fundamental group $G(n,k,r,q)$ of the manifold $M(n,k,r,q)$ which correspond to spines of the manifold. Furthermore, we determine the split extension $E(n,r,q)$ of $G(n,k,r,q)$ under the action of a cyclic group of order n. It turns out to be the fundamental group of a three-dimensional closed orbifold obtained from the manifold $M(n,k,r,q)$ as a quotient space with respect to the action of a suitable rotational symmetry θ of order n. Finally, we completely describe the underlying topological space and the singular set of this orbifold. One of our results is that the combinatorial manifold $M(n,k,r,q)$ is topologically homeomorphic to the n-fold cyclic covering of the 3-sphere $\mathbb{S}^3$ branched over a well-specified $(1,1)$-knot. This allows us to draw explicitly the planar projection of a new interesting class of $(1,1)$-knots (not yet considered in the literature) for which we study some geometrical and algebraic properties. As a very special case, that is, for certain values of the parameters, we obtain some torus knots or Montesinos knots as branching sets. Some subfamilies of our class of manifolds are known: the manifold $M(n,k,2,0)$, with $(n,2-k) = n$, that is, $k \equiv 2 \pmod{n}$, is homeomorphic to the closed connected orientable 3-manifold $M_{n,k}$ considered in [1]; furthermore, the triangulated 3-cells, from which the manifolds $M(n,k,2,0)$ arise, are those used in [2] to construct a family of manifolds with totally geodesic boundary; finally, the manifold $M(n,k,r,0)$, with $(n,2r-2-k) = n$, that is, $k \equiv 2r-2 \pmod{n}$, is the unique closed 3-manifolds related with the class of hyperbolic 3-manifolds with totally geodesic boundary, combinatorially constructed in [3]. We also show that our manifolds are contained in the Dunwoody family in the sense of [4], which was defined via suitable Heegaard diagrams. As a consequence, we give a simple polyhedral description of a large subclass of Dunwoody manifolds, and this connects with the general result obtained in [5]. Finally, we observe that $(1,1)$-knots are very important on the study of Dehn surgery. In fact, they are related with the unsolved problem of which knots in the 3-sphere admit Dehn surgery yielding lens spaces. In fact, in a recent paper [6], we have proved that our class of $(1,1)$-knots admit Dehn surgeries yielding two infinite series of lens spaces.

2. The Combinatorial Manifolds $M(n,k,r,q)$

For every 4-tuples of nonnegative integers (n,k,r,q) such that $n \geq 2$, $r \geq 2$, $k < n$, and $q \geq 0$, let us consider the polyhedron $P(n,k,r,q)$, which is a triangulated 3-ball, having exactly n boundary faces on each hemisphere (see Figure 1). Let us denote by F_i (resp., F_i'), $i = 0,\ldots,n-1$, the southern

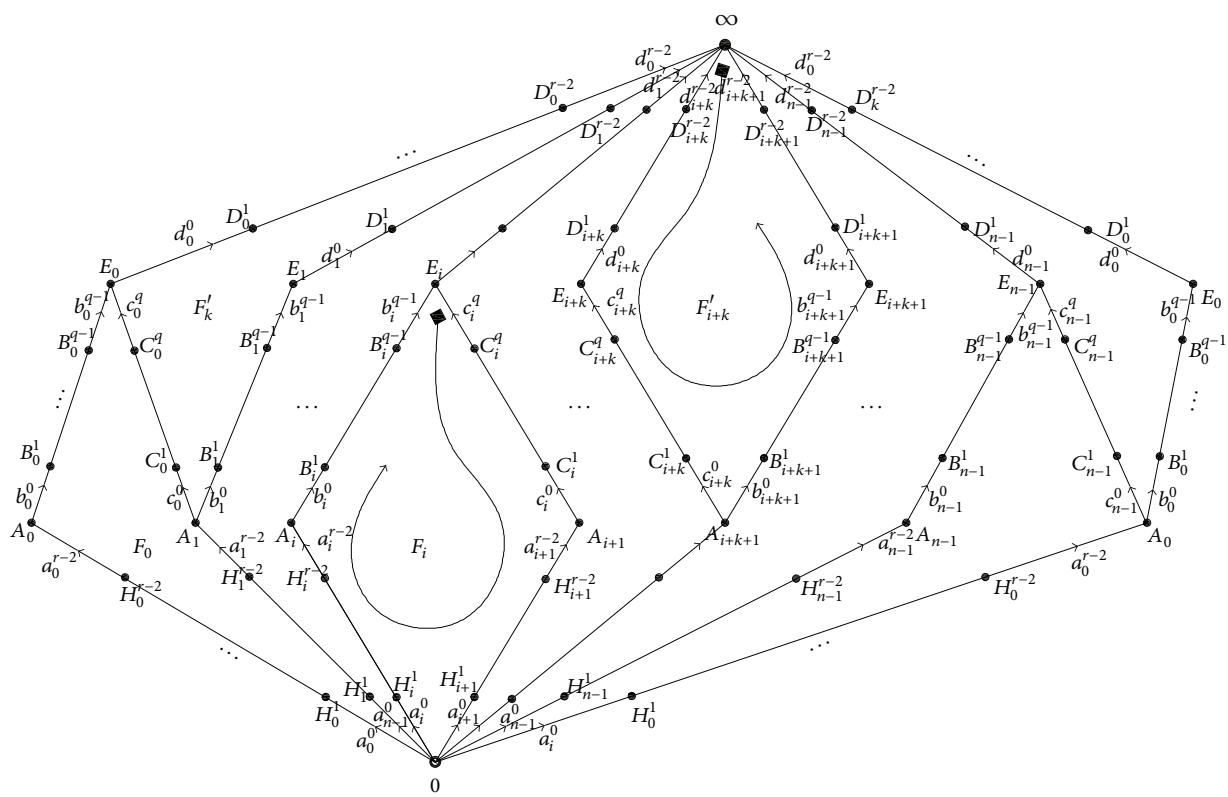

Figure 1: The polyhedron $P(n,k,r,q)$ and the side pairing of its boundary faces.

(resp., northern) boundary faces of $P(n,k,r,q)$. The symbols 0 and ∞ in the picture denote the South pole and the North pole, respectively. The boundary face F_i has $2(r-1)$ oriented edges of type a (denoted by $a_i^0,\dots,a_i^{r-2},a_{i+1}^0,\dots,a_{i+1}^{r-2}$), $q+1$ oriented edges of type c (denoted by $c_i^0,\dots,c_i^q$), and q oriented edges of type b (denoted by $b_i^0,\dots,b_i^{q-1}$). The vertices of F_i are ordered in the clockwise manner according to the sequence $E_i, C_i^q,\dots,C_i^1,A_{i+1},H_{i+1}^{r-2},\dots,H_{i+1}^1$, 0, $H_i^1,\dots,H_i^{r-2}$, A_i, $B_i^1,\dots,B_i^{q-1}$. The boundary face F'_{i+k} has $2(r-1)$ oriented edges of type d (denoted by $d_{i+k}^0,\dots,d_{i+k}^{r-2},d_{i+k+1}^0,\dots,d_{i+k+1}^{r-2}$), $q+1$ oriented edges of type c (denoted by $c_{i+k}^0,\dots,c_{i+k}^q$), and q oriented edges of type b (denoted by $b_{i+k+1}^0,\dots,b_{i+k+1}^{q-1}$). The vertices of F'_{i+k} are ordered in the counter-clockwise manner according to the sequence ∞, $D_{i+k}^{r-2},\dots,D_{i+k}^1$, E_{i+k}, $C_{i+k}^q,\dots,C_{i+k}^1$, A_{i+k+1}, $B_{i+k+1}^1,\dots,B_{i+k+1}^{q-1}$, E_{i+k+1}, $D_{i+k+1}^1,\dots,D_{i+k+1}^{r-2}$. By convention, the polyhedron $P(n,k,r,0)$ has no b-edges, that is, every E-vertex coincides with the A-vertex labelled by the same subscript (see Figure 1).

Now, for every $i=0,\dots,n-1$, we consider the homeomorphisms x_i which identifies the oriented southern face F_i as follows:

$$\left(c_i^q\right)^{-1}\cdots\left(c_i^0\right)^{-1}\left(a_{i+1}^{r-2}\right)^{-1}\cdots\left(a_{i+1}^0\right)^{-1}a_i^0\cdots a_i^{r-2}b_i^0\cdots b_i^{q-1}, \tag{1}$$

with the oriented northern face F_{i+k}

$$\begin{gathered}\left(d_{i+k}^{r-2}\right)^{-1}\cdots\left(d_{i+k}^0\right)^{-1}\left(c_{i+k}^q\right)^{-1}\cdots\left(c_{i+k}^0\right)^{-1}b_{i+k+1}^0\\ \cdots b_{i+k+1}^{q-1}d_{i+k+1}^0\cdots d_{i+k+1}^{r-2},\end{gathered} \tag{2}$$

by matching the oriented edges according to the above sequences (here the subscripts are taken modulo n). Obviously, this side pairing induces identifications among the vertices of the boundary faces (see Figure 1). The quotient space obtained from the polyhedron with the above-described side pairing is denoted by $M(n,k,r,q)$. A celebrated result of Seifert and Threlfall [7] states that the quotient space $M(n,k,r,q)$ represents a closed connected orientable 3-manifolds if and only if its Euler characteristic vanishes. Using this criterion, we can prove our first result.

Theorem 1. *For nonnegative integers $n\geq 2$, $r\geq 2$, $k<n$ and $q\geq 0$, the above constructed space $M(n,k,r,q)$ is a closed connected orientable 3-manifolds if and only if $k\equiv 2r-2+q \pmod n$.*

Proof. It is a routine matter to check that the quotient space $M(n,k,r,q)$ has one vertex. So $M(n,k,r,q)$ admits a cellular decomposition with one vertex, n faces, one 3-ball, and $e=(n,2r+q-k-2)$ edges. In fact, from the pairings of edges induced by the above-defined identification on the boundary

faces of $P(n,k,r,q)$, for every $i = 0,\dots,n-1$, we get the following cycle of equivalent edges:

$$
\begin{aligned}
&a_i^0 \xrightarrow{x_i} b_{i+k+1}^0 \xrightarrow{x_{i+k+1}} b_{i+2(k+1)}^{r-1} \xrightarrow{x_{i+2(k+1)}} \cdots b_{i+\gamma(k+1)}^{q-\beta} \\
&\xrightarrow{x_{i+\gamma(k+1)}} d_{i+(\gamma+1)(k+1)}^{r-\beta-1} \xrightarrow{x^{-1}_{i+(\gamma+1)(k+1)-k}} c_{i+(\gamma+1)(k+1)-k}^{q-\beta+1} \\
&\xrightarrow{x^{-1}_{i+(\gamma+1)(k+1)-2k}} \cdots c_{i+(\gamma+1)(k+1)-\gamma k}^{1} \xrightarrow{x^{-1}_{i+(\gamma+1)(k+1)-(\gamma+1)k}} \\
&a_{i+(\gamma+2)}^{1} \longrightarrow \cdots \qquad \cdots \longrightarrow a_{i+\beta(\gamma+2)}^{\beta} \\
&\xrightarrow{x_{i+\beta(\gamma+2)}} b_{i+\beta(\gamma+2)+k+1}^{\beta} \longrightarrow \cdots b_{i+\beta(\gamma+2)+\alpha(k+1)}^{q-r+1} \\
&\xrightarrow{x_{i+\beta(\gamma+2)+\alpha(k+1)}} d_{i+\beta(\gamma+2)+(\alpha+1)(k+1)}^{0} \\
&\xrightarrow{x^{-1}_{i+\beta(\gamma+2)+(\alpha+1)(k+1)-k}} c_{i+\beta(\gamma+2)+(\alpha+1)(k+1)-k}^{q-r+2} \\
&\xrightarrow{x^{-1}_{i+\beta(\gamma+2)+(\alpha+1)(k+1)-2k}} \cdots c_{i+\beta(\gamma+2)+(\alpha+1)(k+1)-\alpha k}^{\beta+1} \\
&\longrightarrow \cdots a_{\beta(\gamma+2)+(r-2-\beta)(\alpha+2)}^{r-2} \\
&\xrightarrow{x_{i+\beta(\gamma+2)+(r-2-\beta)(\alpha+2)}} b_{i+\beta(\gamma+2)+(r-2-\beta)(\alpha+2)+k+1}^{r-2} \\
&\longrightarrow \cdots b_{i+\beta(\gamma+2)+(r-2-\beta)(\alpha+2)+\alpha(k+1)}^{q-\beta+1} \\
&\xrightarrow{x_{i+\beta(\gamma+2)+(r-2-\beta)(\alpha+2)+\alpha(k+1)}} d_{i+\beta(\gamma+2)+(r-2-\beta)(\alpha+2)+(\alpha+1)(k+1)}^{r-\beta-2} \\
&\xrightarrow{x^{-1}_{i+\beta(\gamma+2)+(r-2-\beta)(\alpha+2)+(\alpha+1)(k+1)-k}} c_{i+\beta(\gamma+2)+(r-2-\beta)(\alpha+2)+(\alpha+1)(k+1)-k}^{q-\beta} \\
&\longrightarrow \cdots c_{i+\beta(\gamma+2)+(r-2-\beta)(\alpha+2)+(\alpha+1)(k+1)-(\alpha+1)k}^{0} \\
&\xrightarrow{x^{-1}_{i+\beta(\gamma+2)+(r-2-\beta)(\alpha+2)+(\alpha+1)(k+1)-(\alpha+1)k}} a_{i+\beta(\gamma+2)+(r-1-\beta)(\alpha+2)-k},
\end{aligned}
\tag{3}
$$

where $q = \alpha(r-1)+\beta$ with $0 \le \beta < r-1$, and γ is the minimum integer such that $\gamma(r-1) \ge q$. Then, if $\beta = 0$ (resp., $\beta \ne 0$), we have $\gamma = \alpha$ (resp., $\gamma = \alpha+1$). The above sequence gives a closed edge path if and only if $\beta(\gamma+2)+(r-1-\beta)(\alpha+2)-k \equiv 0 \pmod{n}$, that is, $\beta\gamma + q - \beta - \alpha\beta + 2(r-1) - k \equiv 0 \pmod{n}$. Noting that $\beta\gamma - \beta - \alpha\beta = 0$, we get the congruence of the statement. □

Let us assume the arithmetic conditions of Theorem 1 and denote by $G(n,k,q,r)$ the fundamental group $\pi_1(M(n,k,q,r))$ of the closed manifold $M(n,k,r,q)$. As before, set $q = \alpha(r-1)+\beta$, with $0 \le \beta < r-1$, and let γ be the minimum integer such that $\gamma(r-1) \ge q$. Recall that if q is a multiple of $r-1$, then $\gamma = \alpha$; otherwise, if $\beta \ne 0$, then $\gamma = \alpha+1$. By Theorem 1, we obtain immediately a geometric presentation for the group $G(n,k,r,q)$ with the above-defined homeomorphisms x_i, $i = 0,\dots,n-1$, as generators, and relations arising from the sequences of equivalent edges. In the following statements, we give such a presentation for the group $G(n,k,r,q)$ and its dual obtained as edge-path group, since $M(n,k,r,q)$ has exactly one vertex.

Corollary 2. *Under the arithmetic conditions of Theorem 1, the fundamental group $G(n,k,r,q)$ of the manifold $M(n,k,r,q)$ admits a finite presentation with n generators x_i, $i = 0,\dots,n-1$, and n cyclically defined relations of the form*

$$
\begin{aligned}
&\left[\prod_{h=0}^{\beta-1}\left(\prod_{\ell=0}^{\gamma} x_{i+h(\gamma+2)+\ell(k+1)} \prod_{m=1}^{\gamma+1} x^{-1}_{i+h(\gamma+2)+(\gamma+1)(k+1)-mk}\right)\right] \\
&\quad\cdot\left[\prod_{h=\beta}^{r-2}\left(\prod_{s=0}^{\alpha} x_{i+\beta(\gamma+2)+(h-\beta)(\alpha+2)+s(k+1)}\right.\right. \\
&\qquad\left.\left.\cdot \prod_{t=1}^{\alpha+1} x^{-1}_{i+\beta(\gamma+2)+(h-\beta)(\alpha+2)+(\alpha+1)(k+1)-tk}\right)\right] \\
&\quad\cdot x^{-1}_{i+q+2(r-1)-1-k} = 1
\end{aligned}
\tag{4}
$$

for every $i = 0,\dots,n-1$. Moreover, this presentation is geometric, that is, it corresponds to a spine of the combinatorial manifold $M(n,k,r,q)$.

Since the quotient complex $M(n,k,r,q)$ has exactly one vertex (if the parameters satisfy the conditions of Theorem 1), we can obtain a further presentation for the fundamental group $G(n,k,r,q)$ whose generators bijectively correspond to the loops of the 1-skeleton, and whose relations arise by walking around the boundaries of the 2-cells.

Corollary 3. *Under the arithmetic conditions of Theorem 1, the fundamental group $G(n,k,r,q)$ of the manifold $M(n,k,r,q)$ admits a further presentation with n generators $a_0,\dots,a_{n-1}$ and n cyclic relations*

$$
\begin{aligned}
&\left[\prod_{h=0}^{\beta} a_{i-h(\gamma+2)} \prod_{h=1}^{r-2-\beta} a_{i-\beta(\gamma+2)-h(\alpha+2)}\right] \\
&\quad\cdot\left[\prod_{j=1}^{\alpha}\left(\prod_{\ell=0}^{\beta} a_{i-j(k+1)-\ell(\gamma+2)} \prod_{\ell=1}^{r-2-\beta} a_{i-j(k+1)-\beta(\gamma+2)-\ell(\alpha+2)}\right)\right] \\
&\quad\cdot\prod_{\ell=0}^{\beta-1} a_{i-(\alpha+1)(k+1)-\ell(\gamma+2)} \\
&= \left[\prod_{s=0}^{\beta} a_{i+1-s(\gamma+2)} \prod_{s=1}^{r-1-\beta} a_{i+1-\beta(\gamma+2)-s(\alpha+2)}\right]
\end{aligned}
$$

$$\cdot\left[\prod_{j=1}^{\alpha}\left(\prod_{p=0}^{\beta-1}a_{i-jk-\gamma-1-p(\gamma+2)}\cdot\prod_{p=0}^{r-2-\beta}a_{i-jk-\alpha-1-\beta(\gamma+2)-p(\alpha+2)}\right)\right]\cdot\prod_{p=0}^{\beta-1}a_{i-(\alpha+1)k-\gamma-1-p(\gamma+2)} \tag{5}$$

for every $i = 0,\dots,n-1$. This presentation is also geometric, that is, it corresponds to a spine of the manifold $M(n,k,r,q)$.

The Heegaard diagrams coming from the polyhedral description of the manifolds $M(n,k,r,q)$ are exactly the ones defined by Dunwoody in 1995 (see [4]). Then, $M(n,k,r,q)$ are just particular cases of the so-called *Dunwoody manifolds* $D(a,b,c,n,r,s)$, which depend on six integer parameters. Such manifolds have been extensively studied by many researchers (see, e.g., [4, 8–13]). More in detail, we have the following.

Corollary 4. *Under the arithmetic conditions of Theorem 1, the above-constructed closed connected 3-manifold $M(n,k,r,q)$ is precisely the Dunwoody manifold $D(r-1,q,q+1,n,r+q,k)$.*

From this result, we obtain immediately a simple polyhedral description of a large subclass of Dunwoody manifolds, which connects with the general result given in [5].

3. Split Extension Group

The above-constructed polyhedron $P(n,k,r,q)$ admits a rotational symmetry of order n, denoted by θ, with respect to its central axis, that is, the axis connecting the points 0 and ∞. The automorphism θ maps every boundary face F_i in the next face F_{i+1}, where the subscripts are considered modulo n. This automorphism induces a symmetry, also denoted by θ, on the combinatorial manifold $M(n,k,r,q)$. Let us denote by $E(n,r,q)$ the split extension group of $G(n,k,r,q)$ with respect to the cyclic group of order n generated by θ. From the obtained presentations for the group $G(n,k,r,q)$, we get two different presentations for the split extension group $E(n,r,q)$.

Theorem 5. *For nonnegative integers $n \geq 2, r \geq 2$, $k < n$, $q \geq 0$, and $k \equiv 2r-2+q \pmod n$, the split extension group $E(n,r,q)$ of $G(n,k,r,q)$ admits the finite presentations*

$$\left\langle a,b : (ba)^n = 1, b\left(a^{\gamma+2}b^{\gamma+2}\right)^{\beta}\left(a^{\alpha+2}b^{\alpha+2}\right)^{r-1-\beta} = 1\right\rangle \cong \left\langle u,v : \left(v^{-1}u\right)^n = 1, \left(u^{\beta+1}v^{r-2-\beta}\right)^{\alpha+2} = v\left(u^{\beta}v^{r-1-\beta}\right)^{\alpha+2}\right\rangle, \tag{6}$$

where $q = \alpha(r-1)+\beta$, $0 \leq \beta < r-1$, and γ is the minimum integer such that $\gamma(r-1) \geq q$.

Proof. Setting $x_i = \theta^{-i}x\theta^{i}$, where $x = x_0$, in the cyclic relations of $G(n,k,r,q)$ as written in the statement of Corollary 2, we get

$$\left[\left(x\theta^{-k-1}\right)^{\gamma}x\theta^{-1}\left(x^{-1}\theta^{k}\right)^{\gamma}x^{-1}\theta^{-1}\right]^{\beta}\cdot\left[\left(x\theta^{-k-1}\right)^{\alpha}x\theta^{-1}\left(x^{-1}\theta^{k}\right)^{\alpha}x^{-1}\theta^{-1}\right]^{r-2-\beta}\cdot\left[\left(x\theta^{-k-1}\right)^{\alpha}x\theta^{-1}\left(x^{-1}\theta^{k}\right)^{\alpha+1}x^{-1}\theta^{-1}\right] = 1. \tag{7}$$

Let y be $x^{-1}\theta^{k}$ with inverse relation $x = \theta^{k}y^{-1}$. Then, the word of the previous relation becomes

$$\left[\left(y^{-1}\theta^{-1}\right)^{\gamma+1}y^{\gamma+1}\theta^{-1}\right]^{\beta}\left[\left(y^{-1}\theta^{-1}\right)^{\alpha+1}y^{\alpha+1}\theta^{-1}\right]^{r-2-\beta}\cdot\left[\left(y^{-1}\theta^{-1}\right)^{\alpha+1}y^{\alpha+2}\theta^{-1}\right], \tag{8}$$

which is equivalent to

$$y\left[\left(y^{-1}\theta^{-1}\right)^{\gamma+2}y^{\gamma+2}\right]^{\beta}\left[\left(y^{-1}\theta^{-1}\right)^{\alpha+2}y^{\alpha+2}\right]^{r-1-\beta}. \tag{9}$$

Substituting $b = y$ and $a = y^{-1}\theta^{-1}$ (i.e., $\theta = a^{-1}b^{-1}$) gives the presentation

$$\left\langle a,b : (ba)^n = 1, b\left(a^{\gamma+2}b^{\gamma+2}\right)^{\beta}\left(a^{\alpha+2}b^{\alpha+2}\right)^{r-1-\beta} = 1\right\rangle. \tag{10}$$

Now, we determine the second presentation for the group $E(n,r,q)$. Substituting $a_i = \theta^{-i}a\theta^{i}$, where $a = a_0$, in the cyclic relations of $G(n,k,r,q)$ (as written in the statement of Corollary 3) yields

$$\left(a\theta^{\gamma+2}\right)^{\beta}\left[\left(a\theta^{\alpha+3}\right)\left(a\theta^{\gamma+2}\right)^{\beta}\left(a\theta^{\alpha+2}\right)^{r-2-\beta}\right]^{\alpha}\cdot\left(a\theta^{\alpha+3}\right)\left(a\theta^{\gamma+2}\right)^{\epsilon}a\theta = \theta^{-1}\left[\left(a\theta^{\gamma+2}\right)^{\beta}\left(a\theta^{\alpha+2}\right)^{r-1-\beta}\right]^{\alpha+1}\left(a\theta^{\gamma+2}\right)^{\beta}, \tag{11}$$

where ϵ is the maximum between 0 and $\beta-1$. If $\beta = 0$ (and hence $\gamma = \alpha$), then the previous relation is equivalent to

$$\left[\left(a\theta^{\alpha+3}\right)\left(a\theta^{\alpha+2}\right)^{r-2}\right]^{\alpha+2} = \left(a\theta^{\alpha+2}\right)^{(\alpha+2)(r-1)+1}. \tag{12}$$

Setting $u = a\theta^{\alpha+2}$ and $v = a\theta^{\alpha+3}$, with inverse relations $\theta = v^{-1}u$ and $a = v(u^{-1}v)^{\alpha+2}$, we obtain the presentation listed in the statement. Analogously, if $\beta \neq 0$, hence $\gamma = \alpha+1$, then the previous relation becomes

$$\left[\left(a\theta^{\alpha+3}\right)^{\beta+1}\left(a\theta^{\alpha+2}\right)^{r-2-\beta}\right]^{\alpha+2} = \left(a\theta^{\alpha+2}\right)\left[\left(a\theta^{\alpha+3}\right)^{\beta}\left(a\theta^{\alpha+2}\right)^{r-1-\beta}\right]^{\alpha+2}. \tag{13}$$

As done before, setting $u = a\theta^{\alpha+2}$ and $v = a\theta^{\alpha+3}$, we obtain the requested relation. □

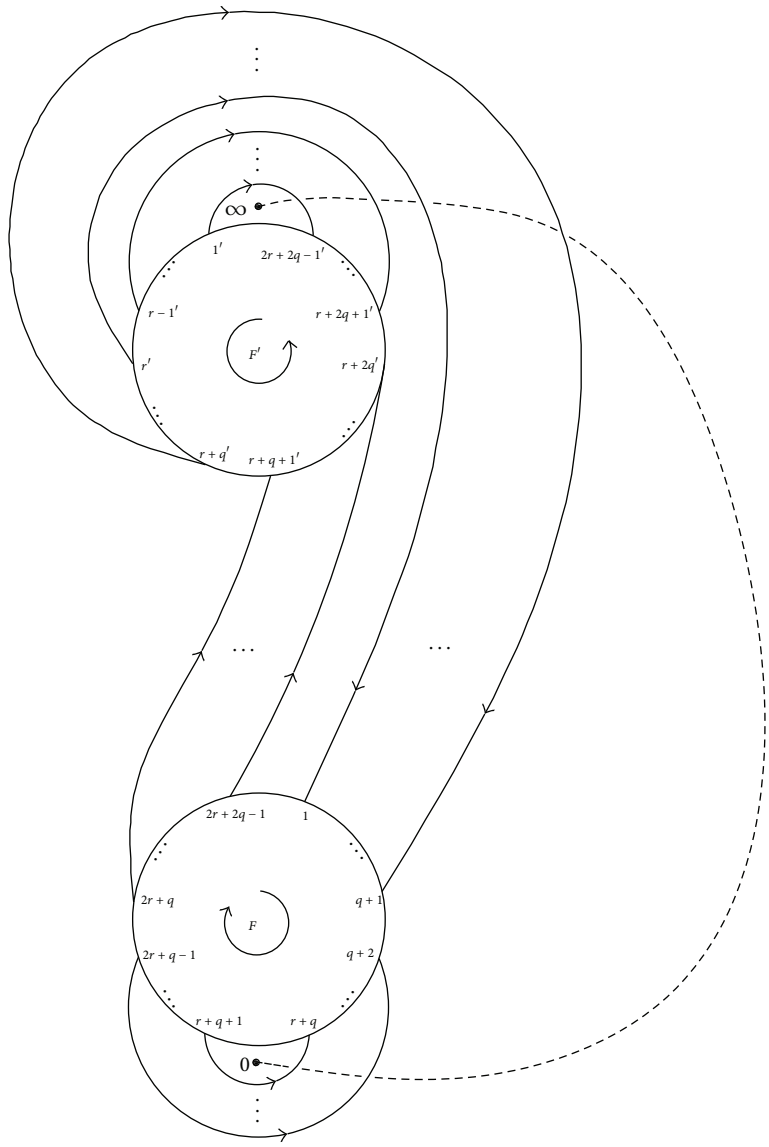

Figure 2: A Heegaard diagram of the manifold $M(1,0,r,q)$.

4. Topological and Covering Properties

The split extension group $E(n,r,q)$ turns out to be the fundamental group of the 3-dimensional closed orbifold obtained as quotient space of the manifold $M(n,k,r,q)$ under the action of the rotational symmetry θ of order n. Recall that this symmetry is induced by the rotation of order n, also denoted by θ, with respect to the interior axis of the polyhedron $P(n,k,r,q)$ which connects the points 0 and ∞. The above orbifold will be denoted by $\mathcal{O}_n(r,\alpha,\beta)$, where $q = \alpha(r-1)+\beta$, $\alpha \geq 0$, $0 \leq \beta < r-1$; in fact, it does not depend by the parameter k, which represents the shift of the northern boundary faces of the polyhedron $P(n,k,r,q)$ with respect to the southern ones. We recall that a knot K in a lens space $L(h,\ell)$ is said to be a $(1,1)$-*knot* if there exists a genus one Heegaard splitting $(L(h,\ell),K) = (V_1,K_1)\cup(V_2,K_2)$, where V_i is a solid torus, $K_i \subset V_i$ is a properly embedded trivial arc, for $i = 1,2$, and $\phi : (\partial V_2, \partial K_2) \to (\partial V_1, \partial K_1)$ is an attaching homeomorphism. An arc A properly embedded in a solid torus V is said to be *trivial* if there is a disk D in V with $A \subset \partial D$ and $\partial D \setminus A \subset \partial V$ (see, e.g., [14]). Set $W_i = (V_i, K_i)$, $i = 1,2$. The pair (W_1,W_2) is also called a $(1,1)$-*splitting* of $(L(h,\ell),K)$.

Theorem 6. *For nonnegative integers $n \geq 2$, $r \geq 2$, $k < n$, $q \geq 0$, and $k \equiv 2r-2+q \pmod{n}$, the combinatorial closed 3-manifold $M(n,k,r,q)$ is homeomorphic to the n-fold cyclic covering of the 3-sphere branched over the $(1,1)$-knot $K(r,\alpha,\beta)$ depicted in Figure 6, where $q = \alpha(r-1)+\beta$ and $0 \leq \beta < r-1$.*

Proof. The underlying space of the orbifold $\mathcal{O}_n(r,\alpha,\beta)$ is just the manifold $M(1,0,r,q)$. This manifold can be represented by the Heegaard diagram of genus one depicted in Figure 2. Since the fundamental group $G(1,0,r,q)$ is trivial, $M(1,0,r,q) \cong \mathbb{S}^3$. By Theorem 6 of [11], the singular set of

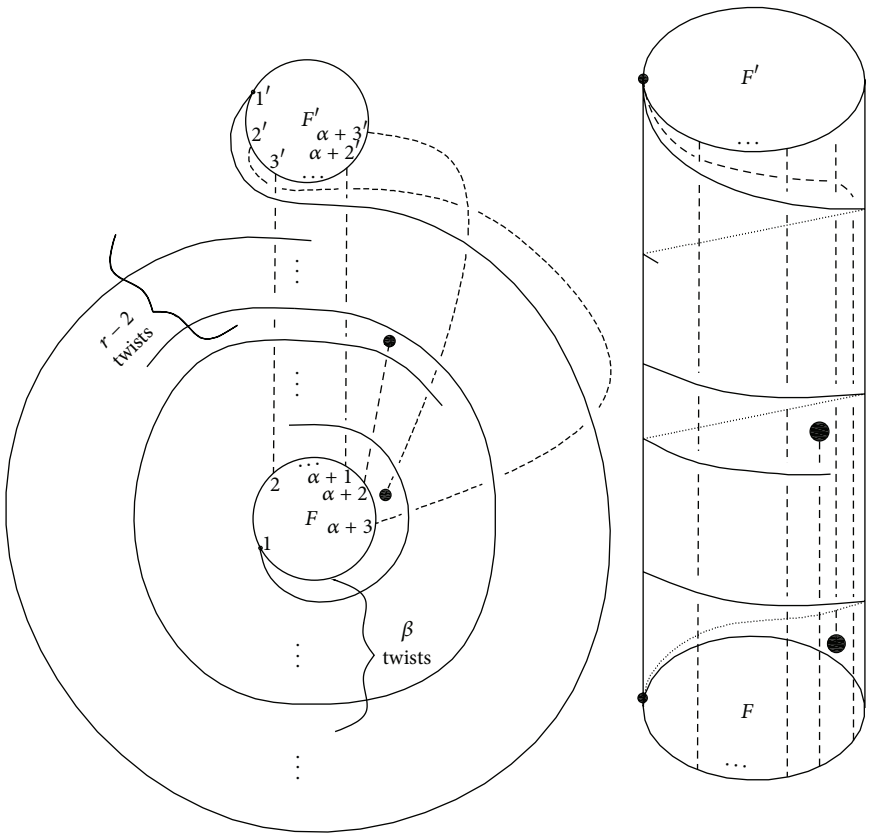

Figure 3: A Heegaard diagram of $M(1,0,r,q)$ with a reducible 1-handle and its representation into a cylinder (q odd).

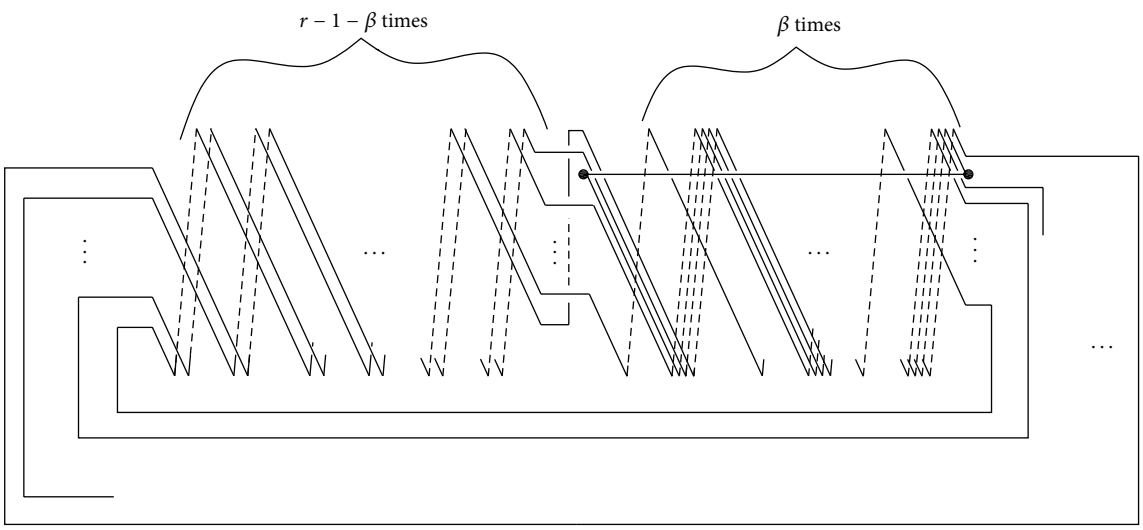

Figure 4: The knot $K(r,\alpha,\beta)$ (q odd).

the orbifold $\mathcal{O}_n(r,\alpha,\beta)$ is a $(1,1)$-knot $K(r,\alpha,\beta)$, depending on three parameters and formed by the image of the 0∞-axis of $P(n,k,r,q)$ (depicted as a dotted line in Figure 2) in the quotient space $M(n,k,r,q)/\langle\theta\rangle$. The Heegaard diagram of $M(1,0,r,q)$ in Figure 2 can be transformed into a simpler one via suitable Whitehead-Zieschang reductions (see [15]).

Each of these moves consists in a simplification of the graph along a closed simple curve surrounding one of the circles in a planar representation of the diagram (for more details about such moves see, e.g., [15–17]). This allows us to obtain a Heegaard diagram having a reducible 1-handle; this diagram admits different planar representations depending

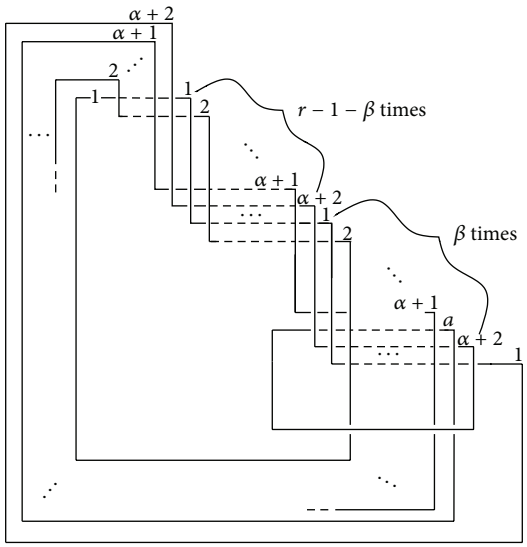

Figure 5: A further planar projection of the knot $K(r,\alpha,\beta)$ (q odd).

on q being even or odd. In Figure 3(a), we show a Heegaard diagram of $M(1,0,r,q)$ with a reducible 1-handle for q odd.

In order to cancel the unique 1-handle, we can draw the singular set (depicted as a dotted line in Figures 2 and 3) into a cylinder, so that the circles F and F' coincide with its bases (see Figure 3(b), for q odd). Then, we image to unscrew the upper base of the cylinder $r-1-\beta$ times and the lower one β times. This gives a braid with $\alpha+2$ threads on its upper side and $\alpha+3$ threads on its lower side. Now it only remains to close the braid by identifying the 0- and ∞-poles of the singular set. The obtained knot $K(r,\alpha,\beta)$, shown in Figure 4, has so many twists in its left (resp., right) side as the unscrew motions on the upper (resp., lower) base of the cylinder. An equivalent planar projection of the knot $K(r,\alpha,\beta)$, which is the singular set, is given in Figure 5. By a sequence of Reidemeister moves, we can further simplify the knot into the cyclic form shown in Figure 6. The case q even can be treated in a similar way. Moreover, the final planar projection depicted in Figure 6 represents the knot $K(r,\alpha,\beta)$ for both cases q odd and q even. □

Theorem 7. *For nonnegative integers $n \geq 2$, $r \geq 2$, $k < n$, $q \geq 0$, and $k \equiv 2r-2+q \pmod{n}$, the group of the $(1,1)$-knot $K(r,\alpha,\beta)$ admits the 2-generator presentations*

$$\pi(K(r,\alpha,\beta)) \cong \left\langle a,b : b\left(a^{\gamma+2}b^{\gamma+2}\right)^{\beta}\left(a^{\alpha+2}b^{\alpha+2}\right)^{r-1-\beta} = 1\right\rangle$$
$$\cong \left\langle u,v : \left(u^{\beta+1}v^{r-2-\beta}\right)^{\alpha+2} = v\left(u^{\beta}v^{r-1-\beta}\right)^{\alpha+2}\right\rangle, \tag{14}$$

where $q = \alpha(r-1)+\beta$, $0 \leq \beta < r-1$, and γ is the minimum integer such that $\gamma(r-1) \geq q$.

Proof. The group $G = G(n,k,r,q)$ can be embedded as a normal subgroup of index n in $E = E(n,r,q)$, whose presentation is given in Theorem 5. The map $\phi : G \to E$, defined by $\phi(x_i) = \theta^{-i}x\theta^{i}$, gives the desired embedding. Furthermore, G is isomorphic to the normal closure of x in E, and there is a short exact sequence $1 \to G \xrightarrow{\phi} E \to \mathbb{Z}_n \to 1$, where $\mathbb{Z}_n = \langle \theta : \theta^n = 1\rangle$. Let us consider the 3-orbifold $\mathcal{O}_n(r,\alpha,\beta)$ in the proof of Theorem 6, whose underlying space is $\mathbb{S}^3$ and whose singular set is the $(1,1)$-knot $K(r,\alpha,\beta)$, with branching index n. The n-fold covering map $M(n,k,r,q) \to \mathcal{O}_n(r,\alpha,\beta)$ induces a group embedding $G \triangleleft \Omega$, where Ω denotes the fundamental group of $\mathcal{O}_n(r,\alpha,\beta)$. In particular, we have $[\Omega : G] = n$, and Ω fits in a short exact sequence $1 \to G \to \Omega \to \mathbb{Z}_n \to 1$, where $\mathbb{Z}_n$ is generated by the rotational symmetry θ. Now, five lemma implies $E \cong \Omega$, and $\pi(K(r,\alpha,\beta))$ is presented as above by Theorem 5. In fact, a $(1,1)$-knot is a two-generator knot (see [9, 14]). Therefore, a $(1,1)$-knot in the 3-sphere is prime (see [18]). But prime knots are classified by their groups. □

To end this section, we consider the manifolds $M(n,k,r,q)$ for particular values of the parameters and explicitly recognize the corresponding branch sets among some classical knots.

Theorem 8. *For nonnegative integers $n \geq 2$, $r \geq 2$, $k < n$, $q = \alpha(r-1)$, $\alpha \geq 0$, and $k \equiv 2r-2+q \pmod{n}$, the combinatorial manifold $M(n,k,r,q)$ is the n-fold cyclic covering of the 3-sphere branched over the torus knot $T(\eta,\eta\xi+1)$, where $\eta = \alpha+2$ and $\xi = r-1$.*

Proof. Under the considered hypotheses, the split extension group $E(n,r,q)$ admits the finite presentation

$$\left\langle u,v : \left(v^{-1}u\right)^{n} = 1, \left(uv^{r-2}\right)^{\alpha+2} = v^{(\alpha+2)(r-1)+1}\right\rangle \tag{15}$$

(see the second presentation in the statement of Theorem 5). This is the fundamental group of the orbifold $\mathcal{O}_n(r,\alpha,\beta)$, having the $(1,1)$-knot $K(r,\alpha,\beta)$ as singular set. Since a $(1,1)$-knot is a two-generator knot (see, e.g., [14]), it is a prime knot in the 3-sphere [18]. Thus, $K(r,\alpha,\beta)$ is completely determined by its group (for more details see, e.g., [19, Theorem 6.1.12, page 76]). In this case, the group of $K(r,\alpha,\beta)$ is presented by $\langle u,v : (uv^{r-2})^{\alpha+2} = v^{(\alpha+2)(r-1)+1}\rangle$, where (u,v) is a meridian-longitude pair of the knot. Setting $uv^{r-2} = t$, with inverse relation $u = tv^{2-r}$, the group of $K(r,\alpha,\beta)$ is presented by $\langle t,v : t^{\alpha+2} = v^{(\alpha+2)(r-1)+1}\rangle$. Since the transformation matrix between the pairs (t,v) and (u,v) is $\left(\begin{smallmatrix}1 & 0\\ r-2 & 1\end{smallmatrix}\right)$ with determinant +1, we see that also (t,v) is a meridian-longitude pair of the knot. The last group presentation just encodes the torus knot of type $(\eta,\eta\xi+1)$, with $\eta = \alpha+2$ and $\xi = r-1$. □

Theorem 9. *For nonnegative integers $n \geq 2$, $r \geq 2$, $k < n$, $q = \alpha(r-1)+\beta$, $\alpha \geq 0$, $\beta = r-2$, and $k \equiv 2r-2+q \pmod{n}$, the combinatorial manifold $M(n,k,r,q)$ is the n-fold cyclic covering of the 3-sphere branched over the torus knot $T(\eta,\eta\xi-1)$, where $\eta = \alpha+3$ and $\xi = r-1$.*

Proof. In this case, the $(1,1)$-knot $K(r,\alpha,\beta)$ is uniquely determined by its group $\pi(K(r,\alpha,\beta)) = \langle u,v : u^{(r-1)(\alpha+3)-1} = (u^{r-2}v)^{\alpha+3}\rangle$. Substituting $h = u^{r-2}v$, with inverse relation

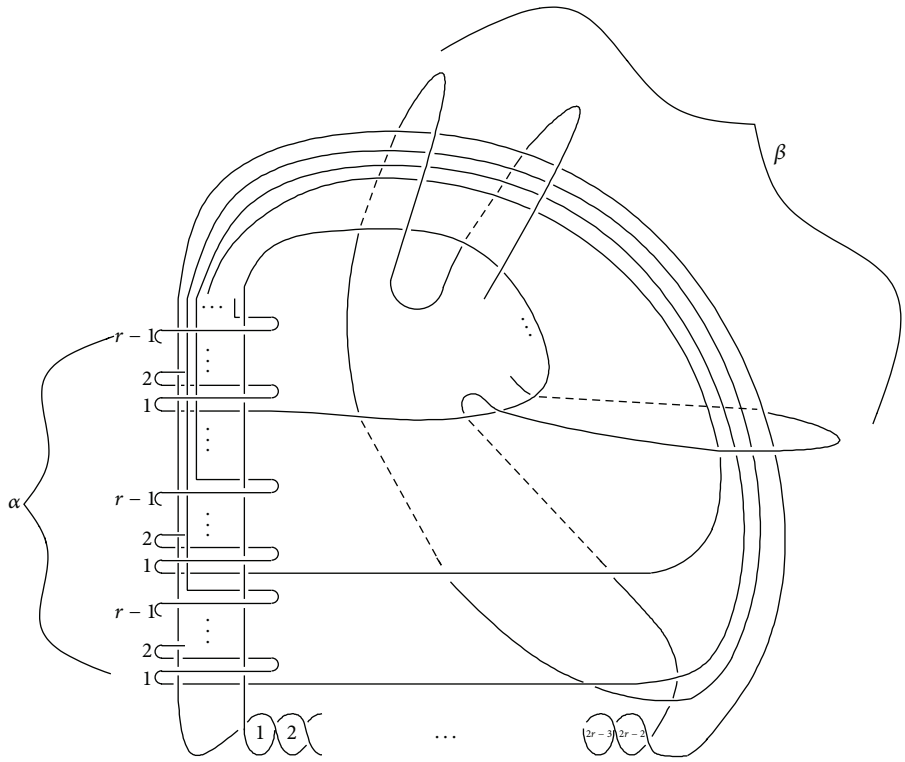

FIGURE 6: A simpler planar projection of the knot $K(r, \alpha, \beta)$.

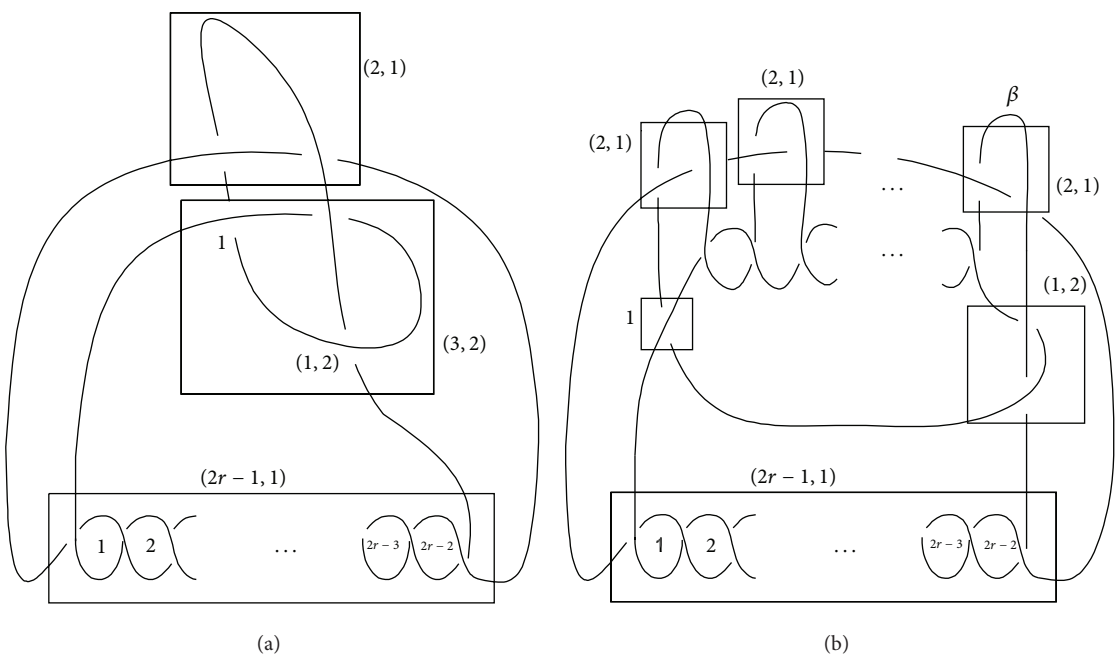

FIGURE 7: The knots $K(r, 0, 1)$ and $K(r, 0, \beta)$, $\beta \geq 2$.

$v = u^{2-r}h$, yields $\pi(K(r,\alpha,\beta)) = \langle u, h : u^{(r-1)(\alpha+3)-1} = h^{\alpha+3}\rangle$. Hence, $K(r,\alpha,\beta)$ is just the torus knot of the statement. □

Theorem 10. *For every $r \geq 3$, the $(1,1)$-knot $K(r,\alpha,\beta)$, where $\alpha = 0$ and $0 < \beta < r-2$, depicted in Figure 7(b), is encoded by the 2-generator group with defining presentations*

$$\left\langle a, b : b\left(a^3b^3\right)^{\beta}\left(a^2b^2\right)^{r-1-\beta} = 1\right\rangle \cong \left\langle u, v : \left(u^{\beta+1}v^{r-2-\beta}\right)^2 = v\left(u^{\beta}v^{r-1-\beta}\right)^2\right\rangle. \tag{16}$$

If further $\beta = 1$, then the knot $K(r,\alpha,\beta)$ is equivalent to the Montesinos knot $\mathbf{m}(-1; 1/2; 1/3; 1/(2r-1))$ (in particular, the torus knot $T(5,3)$ for $r = 3$) encoded by the 2-generator group with defining presentations $\langle a, b : b(a^3b^3)(a^2b^2)^{r-2} = 1\rangle \cong \langle u, v : (u^2v^{r-3})^2 = v(uv^{r-2})^2\rangle$. Furthermore, the combinatorial manifold $M(2,k,r,1)$ is the Seifert fibered space with Seifert invariants $(O\ 0\ o :\ -1\ (2,1)\ (3,1)\ (2r-1,1))$.

Proof. The first sentence follows from Theorem 7 and Theorem 3.7 of [20]. If $\alpha = 0$ and $\beta = 1$, then the singular set $K(r,\alpha,\beta)$ is the knot in Figure 7(a). It is equivalent to the Montesinos knot $\mathbf{m}(0; 1/2; 2/3; 1/(2r-1))$, which is just the Montesinos knot of the statement (for more information on Montesinos knots and links see [21], Chapter 12, Section D). The last statement follows from a well-known theorem of Montesinos (see, e.g., [21], Proposition 12.30). □

Acknowledgments

This work is supported by the project "L'Orèal Italia Per Le Donne e La Scienza." The author thanks A. Cavicchioli (University of Modena and Reggio E., Italy) and L. Paoluzzi (University of Marseille, France) for their comments and many helpful suggestions.

References

[1] A. Cavicchioli, F. Hegenbarth, and A. C. Kim, "A geometric study of Sieradski groups," *Algebra Colloquium*, vol. 5, no. 2, pp. 203–217, 1998.

[2] L. Paoluzzi and B. Zimmermann, "On a class of hyperbolic 3-manifolds and groups with one defining relation," *Geometriae Dedicata*, vol. 60, no. 2, pp. 113–123, 1996.

[3] A. I. Telloni, "Some hyperbolic 3-manifolds with totally geodesic boundary," *Algebra Colloquium*, vol. 17, no. 3, pp. 457–468, 2010.

[4] M. J. Dunwoody, "Cyclic presentations and 3-manifolds," in *Groups—Korea '94: Proceedings of the International Conference*, pp. 47–55, Walter de Gruyter, Berlin, Germany, 1995.

[5] A. Cattabriga, M. Mulazzani, and A. Vesnin, "Complexity, Heegaard diagrams and generalized Dunwoody manifolds," *Journal of the Korean Mathematical Society*, vol. 47, no. 3, pp. 585–599, 2010.

[6] A. Cavicchioli and A. I. Telloni, "Exceptional surgeries on certain $(1,1)$-knots," *Osaka Journal of Mathematics*, vol. 48, no. 3, pp. 827–843, 2011.

[7] H. Seifert and W. Threlfall, *A Textbook of Topology; Topology of 3-Dimensional Fibered Spaces*, vol. 89, Academic Press, New York, NY, USA, 1980.

[8] Kh. Aĭdyn, I. Gültekyn, and M. Mulatstsani, "Torus knots and Dunwoody manifolds," *Siberian Mathematical Journal*, vol. 45, no. 1, pp. 3–10, 2004.

[9] A. Cattabriga and M. Mulazzani, "All strongly-cyclic branched coverings of $(1,1)$-knots are Dunwoody manifolds," *Journal of the London Mathematical Society*, vol. 70, no. 2, pp. 512–528, 2004.

[10] A. Cavicchioli, B. Ruini, and F. Spaggiari, "On a conjecture of M. J. Dunwoody," *Algebra Colloquium*, vol. 8, no. 2, pp. 169–218, 2001.

[11] L. Grasselli and M. Mulazzani, "Genus one 1-bridge knots and Dunwoody manifolds," *Forum Mathematicum*, vol. 13, no. 3, pp. 379–397, 2001.

[12] A. C. Kim, Y. Kim, and A. Vesnin, "On a class of cyclically presented groups," in *Groups—Korea '98: Proceedings of the International Conference*, Y. G. Baik, D. L. Johnson, and A. C. Kim, Eds., pp. 211–220, Walter de Gruyter, New York, NY, USA, 2000.

[13] S. H. Kim and H. J. Song, "Dunwoody 3-manifolds and $(1,1)$-decomposable knots," in *Proceedings of the Workshops in Pure Mathematics*, J. Kim and S. Hong, Eds., vol. 19, pp. 193–211, 2000.

[14] D. H. Choi and K. H. Ko, "Parametrizations of 1-bridge torus knots," *Journal of Knot Theory and Its Ramifications*, vol. 12, no. 4, pp. 463–491, 2003.

[15] F. Grunewald and U. Hirsch, "Link complements arising from arithmetic group actions," *International Journal of Mathematics*, vol. 6, no. 3, pp. 337–370, 1995.

[16] A. Cavicchioli, F. Spaggiari, and A. I. Telloni, "Topology of compact space forms from Platonic solids. I," *Topology and Its Applications*, vol. 156, no. 4, pp. 812–822, 2009.

[17] F. Spaggiari, "The combinatorics of some tetrahedron manifolds," *Discrete Mathematics*, vol. 300, no. 1–3, pp. 163–179, 2005.

[18] F. H. Norwood, "Every two-generator knot is prime," *Proceedings of the American Mathematical Society*, vol. 86, no. 1, pp. 143–147, 1982.

[19] A. Kawauchi, *A Survey of Knot Theory*, Birkhäuser, Basel, Switzerland, 1996.

[20] J. M. Montesinos, *Sobre la Representacion de Variedades Tridimensionales*, Mimeographed Notes, Universidad Complutense, Madrid, Spain, 1977.

[21] G. Burde and H. Zieschang, *Knots*, de Gruyter Studies in Mathematics 5, Walter de Gruyter, Berlin, Germany, 1985.