Hindawi Publishing Corporation
Advances in Electrical Engineering
Volume 2014, Article ID 514019, 7 pages
http://dx.doi.org/10.1155/2014/514019

Research Article

Single Active Element Based Voltage-Mode Multifunction Filter

Jitendra Mohan,[1] Bhartendu Chaturvedi,[1] and Sudhanshu Maheshwari[2]

[1] *Department of Electronics and Communication Engineering, Jaypee Institute of Information Technology, Noida 201304, India*
[2] *Department of Electronics Engineering, Z. H. College of Engineering and Technology, Aligarh Muslim University, Aligarh 202002, India*

Correspondence should be addressed to Jitendra Mohan; jitendramv2000@rediffmail.com

Received 14 April 2014; Accepted 13 July 2014; Published 18 August 2014

Academic Editor: Richard T. Lauer

The paper presents a new voltage-mode multifunction filter. The proposed filter employs single modified fully differential second generation current conveyor (FDCCII), two grounded capacitors, and three resistors. The proposed circuit enjoys the employment of two grounded capacitors (attractive for absorbing shunt parasitic capacitance and ideal for IC implementation). The proposed circuit provides all five generic filter responses (low pass (LP), high pass (HP), band pass (BP), notch (NH), and all pass (AP) filter responses) simultaneously with single input. The novel proposed filter has low active and passive sensitivities. A number of time domain and frequency domain simulation results depicted through PSPICE using 0.18 μm TSMC process parameters are included to validate the theory. The proposed circuit is expected to enhance the existing knowledge on the subject.

1. Introduction

Analog filters are the basic building blocks and widely used for continuous-time signal processing. Applications of analog filters employing current-mode active elements extend over a large number of areas [1–5]. In the literature, several voltage-mode (VM) universal biquadratic filters with single input and multioutputs (SIMO) have been reported [6–10]. A SIMO circuit configuration reported in [6] employs five current feedback amplifiers (CFAs), two grounded capacitors, and six resistors. It realizes all the standard filter functions, namely, low pass (LP), band pass (BP), high pass (HP), notch (NH), and all pass (AP), simultaneously, and also enjoys the features of using only grounded capacitors and orthogonal control between the resonance angular frequency and quality factor. In [7], two voltage-mode universal filter circuits are presented. Each circuit employs two FDCCII, two resistors, and two capacitors. The filter circuits reported in [8, 9] use single FDCCII, three resistors, and two grounded capacitors and realize all generic filter responses in VM. Two VM universal filters are reported in [10]. The first universal filter employs three DVCCs together with two grounded capacitors and three grounded resistors and provides five outputs with single input but it requires matching condition to realize all the generic filter responses. The second reported VM universal filter with three inputs and one output employs three DVCCs, two grounded capacitors, and three grounded resistors. Over the last decades, numerous voltage-mode biquadratic filters using current conveyors are also presented [11–18]. However, all of these reported filters cannot realize five filtering responses simultaneously.

In this paper, a new voltage-mode multifunction filter has been presented. The proposed filter employs single modified FDCCII as an active element, two grounded capacitors, and three resistors. The proposed circuit realizes all generic filter functions (low pass (LP), band pass (BP), high pass (HP), Notch (NH), and all pass (AP)) simultaneously. The proposed circuit of multifunction filter enjoys the features of minimum number of active and passive components and no requirement of component choice except for to realize all pass filter and low active and passive sensitivities.

2. Circuit Description

Fully differential second-generation current conveyor (FDCCII) as a current-mode active device was proposed to improve the dynamic range especially in mixed-mode applications where fully differential signal processing is

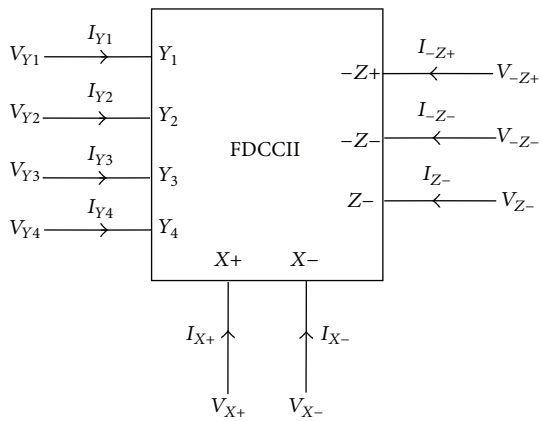

Figure 1: Symbol of modified FDCCII.

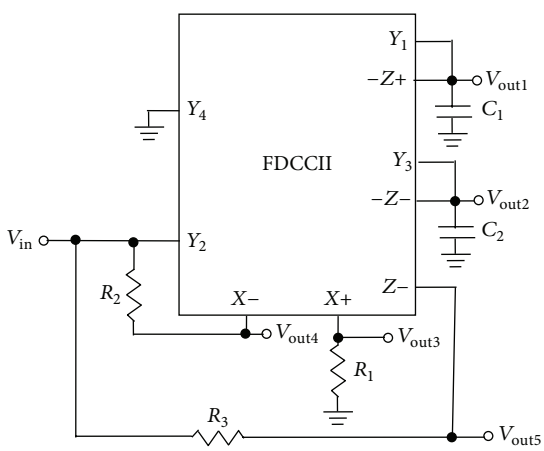

Figure 2: Proposed voltage mode multifunction filter.

required [19]. This active element is a versatile building block whose applications exist in the literature [7–9, 11, 13–17]. One of the most important applications is the design of analog filters.

The input-output relationship of the modified FDCCII whose symbol is shown in Figure 1 is characterized by the following matrix equation:

$$\begin{bmatrix} V_{X+} \\ V_{X-} \\ I_{-z+} \\ I_{-z-} \\ I_{z-} \end{bmatrix} = \begin{bmatrix} 1 & -1 & 1 & 0 & 0 & 0 \\ -1 & 1 & 0 & 1 & 0 & 0 \\ 0 & 0 & 0 & 0 & -1 & 0 \\ 0 & 0 & 0 & 0 & 0 & -1 \\ 0 & 0 & 0 & 0 & 0 & 1 \end{bmatrix} \begin{bmatrix} V_{Y1} \\ V_{Y2} \\ V_{Y3} \\ V_{Y4} \\ I_{X+} \\ I_{X-} \end{bmatrix}. \quad (1)$$

The proposed circuit employing single modified FDCCII, two grounded capacitors, and three resistors is shown in Figure 2. The use of grounded capacitors is particularly attractive for integrated circuit implementation because grounded capacitors compensate stray capacitances at their nodes [20].

Routine analysis of the proposed circuit using (1) yields the following transfer functions:

$$\begin{aligned} \frac{V_{out1}}{V_{in}} &= \frac{sC_2R_2}{\Delta_1}, \\ \frac{V_{out2}}{V_{in}} &= \frac{1}{\Delta_1}, \\ \frac{V_{out3}}{V_{in}} &= -\frac{s^2C_1C_2R_1R_2}{\Delta_1}, \\ \frac{V_{out4}}{V_{in}} &= \frac{s^2C_1C_2R_1R_2+1}{\Delta_1}, \\ \frac{V_{out5}}{V_{in}} &= \frac{s^2C_1C_2R_1R_2+sC_2\left(R_2-R_3\right)+1}{\Delta_1}, \end{aligned} \quad (2)$$

where $\Delta_1 = s^2C_1C_2R_1R_2 + sC_2R_2 + 1$.

It can be seen from (2) that a noninverting BP response is obtained from V_{out1}, a noninverting LP response is obtained from V_{out2}, an inverting HP response is obtained from V_{out3}, a noninverting NH response is obtained from V_{out4}, and if $R_3 = 2R_2$, a noninverting AP response is obtained from V_{out5}. It is to be noted that there is no need to impose component choice except in the realization of AP filter response.

The resonance angular frequency (ω_o) and the quality factor (Q) are given by

$$\begin{aligned} \omega_o &= \sqrt{\frac{1}{C_1C_2R_1R_2}}, \\ Q &= \sqrt{\frac{C_1R_1}{C_2R_2}}. \end{aligned} \quad (3)$$

The sensitivities of ω_o and Q with respect to passive components are given as

$$S^{\omega_o}_{R_1,R_2,C_1,C_2} = -\frac{1}{2}, \qquad S^{Q}_{R_1,C_1} = -S^{Q}_{R_2,C_2} = \frac{1}{2}. \quad (4)$$

It is to be noted from (4) that all the sensitivities are less than unity in magnitude.

3. Nonideal Analysis

To account for non ideal sources, two sets of parameters α_i and β_j are introduced where α_i ($i = 1, 2, 3$) and β_j ($j = 1, 2, 3, 4, 5, 6$) represent the current and voltage transfer gains of the internal current and voltage followers of the FDCCII, respectively. They can be approximated by the first order of low pass functions, which can be considered to have unity values for frequencies much less than their corner frequencies [10]. By assuming, the circuit is working at the frequencies much less than the corner frequencies of α_i and β_j. More specifically, $\alpha_i = 1-\delta_i$, ($|\delta_i| \ll 1$) where δ_1 (from $X+$ to $-Z+$), δ_2 (from $X-$ to $-Z-$) and δ_3 (from $X-$ to $Z-$) are current tracking errors. Similarly, $\beta_j = 1 - \varepsilon_j$, ($|\varepsilon_j| \ll 1$) where ε_1 (from Y_1 to $X+$), ε_2 (from Y_2 to $X+$), ε_3 (from Y_3 to $X+$), ε_4

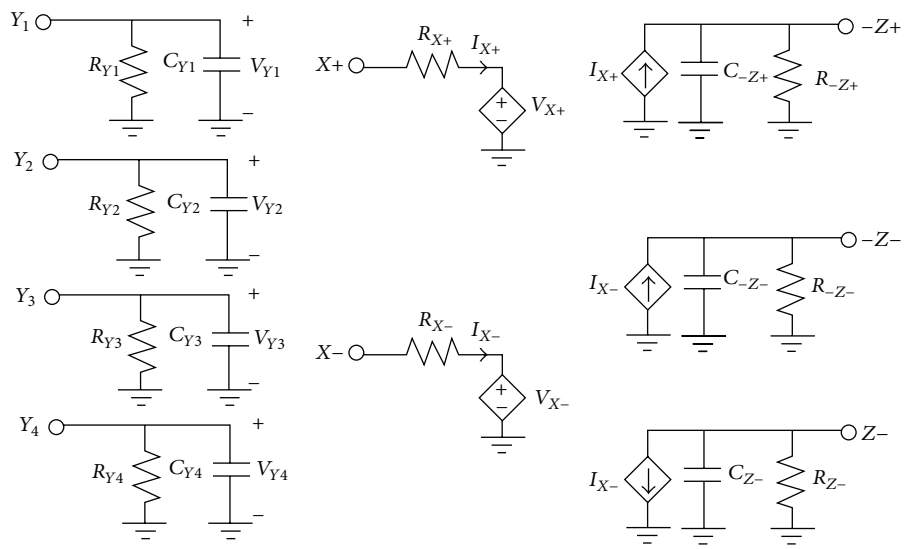

Figure 3: Parasitic model of modified FDCCII.

(from Y_1 to $X-$), ε_5 (from Y_2 to $X-$), and ε_6 (from Y_4 to $X-$), are voltage tracking errors. By incorporating these two non ideal sources onto the ideal input-output matrix relationship, the modified FDCCII now leads to:

$$\begin{bmatrix} V_{X+} \\ V_{X-} \\ I_{-Z+} \\ I_{-Z-} \\ I_{Z-} \end{bmatrix} = \begin{bmatrix} \beta_1 & -\beta_2 & \beta_3 & 0 & 0 & 0 \\ -\beta_4 & \beta_5 & 0 & \beta_6 & 0 & 0 \\ 0 & 0 & 0 & 0 & -\alpha_1 & 0 \\ 0 & 0 & 0 & 0 & 0 & -\alpha_2 \\ 0 & 0 & 0 & 0 & 0 & \alpha_3 \end{bmatrix} \begin{bmatrix} V_{Y1} \\ V_{Y2} \\ V_{Y3} \\ V_{Y4} \\ I_{X+} \\ I_{X-} \end{bmatrix}. \quad (5)$$

The proposed circuit of Figure 2 is reanalyzed using (5) so as to obtain nonideal transfer functions as

$$\begin{aligned}
\frac{V_{\text{out1}}}{V_{\text{in}}} &= \frac{sC_2R_2\alpha_1\beta_2 + \alpha_1\alpha_2\beta_3(1-\beta_5)}{\Delta_2}, \\
\frac{V_{\text{out2}}}{V_{\text{in}}} &= \frac{\alpha_1\alpha_2\beta_2\beta_4 - (sC_1R_1 + \alpha_1\beta_1)\alpha_2(1-\beta_5)}{\Delta_2}, \\
\frac{V_{\text{out3}}}{V_{\text{in}}} &= -\left(\frac{s^2C_1C_2R_1R_2\beta_2 + sC_1R_1\alpha_2\beta_3(1-\beta_5)}{\Delta_2}\right), \\
\frac{V_{\text{out4}}}{V_{\text{in}}} &= \frac{s^2C_1C_2R_1R_2\beta_5 - sC_2R_2\alpha_1(\beta_2\beta_4 - \beta_1\beta_5) + \alpha_1\alpha_2\beta_3\beta_4(2\beta_5 - 1)}{\Delta_2}, \\
\frac{V_{\text{out5}}}{V_{\text{in}}} &= \Bigg(s^2C_1C_2R_1R_2[\alpha_3(1-\beta_5)+1] \\
&\quad + sC_2R_2\alpha_1\left[1 + \alpha_3\left(1 - \beta_5 - \beta_2\beta_4\frac{R_3}{R_2}\right)\right] \\
&\quad + \alpha_1\alpha_2\beta_3\beta_4\left[\alpha_3(1-\beta_5)\left(\frac{1}{R_2} - 1\right) + 1\right]\Bigg) \\
&\quad \times (\Delta_2)^{-1},
\end{aligned} \quad (6)$$

where $\Delta_2 = s^2C_1C_2R_1R_2 + sC_2R_2\alpha_1\beta_1 + \alpha_1\alpha_2\beta_3\beta_4$.

The resonance angular frequency (ω_o) and quality factor (Q) are obtained by

$$\begin{aligned}
\omega_o &= \sqrt{\frac{\alpha_1\alpha_2\beta_3\beta_4}{C_1C_2R_1R_2}}, \\
Q &= \frac{1}{\beta_1}\sqrt{\frac{R_1C_1\alpha_2\beta_3\beta_4}{R_2C_2\alpha_1}}.
\end{aligned} \quad (7)$$

The active and passive sensitivities of ω_o and Q are given as

$$\begin{aligned}
&S^{\omega_o}_{R_1,R_2,C_1,C_2} = -\frac{1}{2}, \qquad S^{\omega_o}_{\alpha_1,\alpha_2,\beta_3,\beta_4} = \frac{1}{2}, \\
&S^{Q}_{R_1,C_1} = -S^{Q}_{R_2,C_2} = \frac{1}{2}, \qquad S^{Q}_{\alpha_2,\beta_3,\beta_4} = -S^{Q}_{\alpha_1} = \frac{1}{2}, \\
&S^{Q}_{\beta_1} = -1.
\end{aligned} \quad (8)$$

It is to be noted from (8) that all the active and passive sensitivities are less than or equal to unity in magnitude.

4. Effects of FDCCII Parasitic

A parasitic model of FDCCII is shown in Figure 3.

When the parasitic equivalent circuit model of modified FDCCII is used instead of the ideal one, the parasitics of modified FDCCII appear as the undesirable factors in (2), which lead to modified transfer functions as follows:

$$\begin{aligned}
\frac{V_{\text{out1}}}{V_{\text{in}}} &= \frac{sa_1 + a_0}{s^2b_2 + sb_1 + b_0}, \\
\frac{V_{\text{out2}}}{V_{\text{in}}} &= \frac{R_{Y1}R_{Y3}R_{-Z+}R_{-Z-}}{s^2b_2 + sb_1 + b_0},
\end{aligned}$$

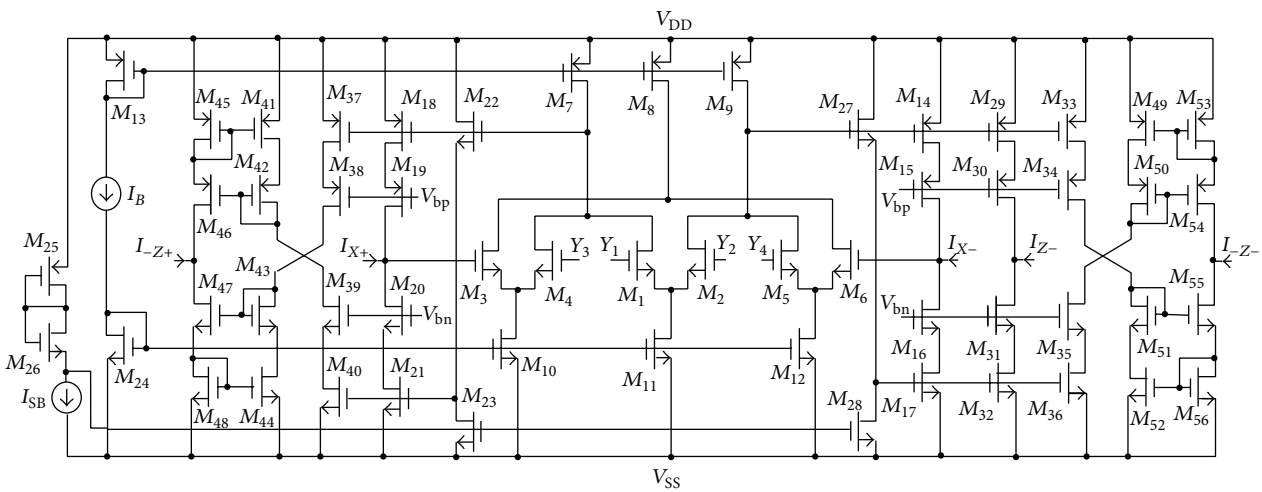

Figure 4: CMOS implementation of the modified FDCCII.

$$\frac{V_{\text{out3}}}{V_{\text{in}}} = -\left(\frac{s^2c_2 + sc_1 + c_0}{s^2b_2 + sb_1 + b_0}\right),$$

$$\frac{V_{\text{out4}}}{V_{\text{in}}} = \frac{s^2b_2 + sd_1 + d_0}{s^2b_2 + sb_1 + b_0},$$

$$\begin{aligned}\frac{V_{\text{out5}}}{V_{\text{in}}} &= \left(s^2b_2 + s\left(b_1 - R_3'C_2'R_{Y1}R_{Y3}R_{-Z+}R_{-Z-}\right)\right.\\ &\quad \left.+\left(b_0 - R_3'R_{Y1}R_{-Z+}\left(R_{Y3} + R_{-Z-}\right)\right)\right)\\ &\quad \times\left(s^2b_2 + sb_1 + b_0\right)^{-1},\end{aligned} \tag{9}$$

where

$$\begin{aligned}
a_1 &= R_2'C_2'R_{Y1}R_{Y3}R_{-Z+}R_{-Z-},\\
a_0 &= R_2'R_{Y1}R_{-Z+}\left(R_{Y3} + R_{-Z-}\right),\\
b_2 &= R_1'R_2'C_1'C_2'R_{Y1}R_{Y3}R_{-Z+}R_{-Z-},\\
b_1 &= C_2'R_2'R_{Y3}R_{-Z-}\left(R_{Y1}R_{-Z+} + R_1'R_{Y1} + R_1'R_{-Z+}\right)\\
&\quad + C_1'R_1'R_2'R_{Y1}R_{-Z+}\left(R_{Y3} + R_{-Z-}\right),\\
b_0 &= R_1'R_2'\left(R_{-Z-}R_{-Z+} + R_{Y3}R_{-Z+} + R_{Y1}R_{-Z-} + R_{Y1}R_{Y3}\right)\\
&\quad + R_{Y1}R_{-Z+}\left(R_{Y3}R_{-Z-} + R_2'R_{Y3} + R_2'R_{-Z-}\right),\\
c_2 &= R_1'R_2'C_1'C_2'R_{Y1}R_{Y3}R_{-Z+}R_{-Z-},\\
c_1 &= C_1'R_1'R_2'R_{Y1}R_{-Z+}\left(R_{Y3} + R_{-Z-}\right),\\
c_0 &= R_1'R_2'\left(R_{-Z-}R_{-Z+} + R_{Y3}R_{-Z+} + R_{Y1}R_{-Z-} + R_{Y1}R_{Y3}\right),\\
d_1 &= C_2'R_2'R_1'R_{Y3}R_{-Z-}\left(R_{Y1} + R_{-Z+}\right)\\
&\quad + C_1'R_1'R_2'R_{Y1}R_{-Z+}\left(R_{Y3} + R_{-Z-}\right),\\
d_0 &= R_1'R_2'\left(R_{-Z-}R_{-Z+} + R_{Y3}R_{-Z+} + R_{Y1}R_{-Z-} + R_{Y1}R_{Y3}\right)\\
&\quad + R_{Y1}R_{-Z+}R_{Y3}R_{-Z-},\\
R_1' &= R_{X+} + R_1,\\
R_2' &= R_{X-} + R_2 + \left(R_{Y2}//C_{Y2}\right),\\
R_3' &= R_3 + \left(R_{Y2}//C_{Y2}\right) + \left(R_{Z-}//C_{Z-}\right),\\
C_1' &= C_1//C_{Y1}//C_{-Z+},\\
C_2' &= C_2//C_{Y3}//C_{-Z-}.
\end{aligned} \tag{10}$$

In practical FDCCII, the external resistors R_k (where, $k = 1, 2, 3$) can be chosen very much smaller than the parasitic resistors at the Y and Z terminals of FDCCII and very much greater than the parasitic resistors at the X terminals of FDCCII, that is, $(R_Y, R_Z) \gg R_k \gg R_X$. Moreover, the external capacitances C_1 and C_2 can be chosen very much greater than the parasitic capacitances at the Y and Z terminals of FDCCII, that is, $(C_1, C_2) \gg (C_Y, C_Z)$.

5. Simulation Results

To verify the given theoretical analysis, the proposed voltage-mode multifunction filter has been simulated using PSPICE. The CMOS implementation of modified FDCCII is shown in Figure 4 and is realized using TSMC 0.18 μm CMOS process model parameters. The supply voltages and currents have been selected as $V_{DD} = -V_{SS} = 1.1$ V, $V_{bp} = V_{bn} = 0$ V, $I_B = 1.4\,\mu$A, and $I_{SB} = 1.3\,\mu$A.

The proposed circuit shown in Figure 2 is designed with the passive component values as $C_1 = C_2 = 50$ pF, $R_1 = R_2 = 1$ kΩ and $R_3 = 2$ kΩ to obtain angular frequency of 3.18 MHz and a quality factor of $Q = 1$. All the magnitude responses

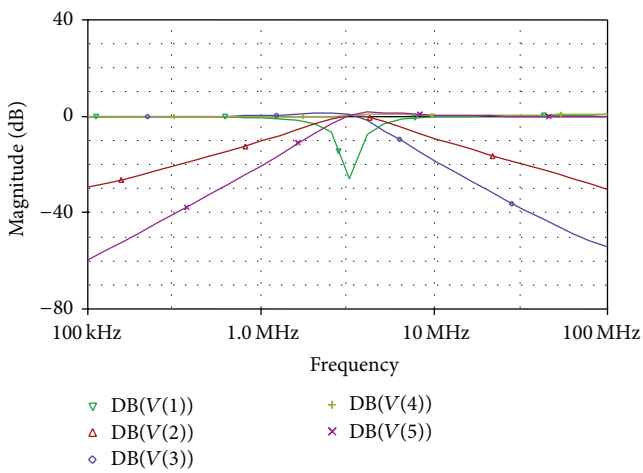

Figure 5: Magnitude responses for all generic filters (LP, HP, BP, NH, and AP) for $Q = 1$ at 3.18 MHz.

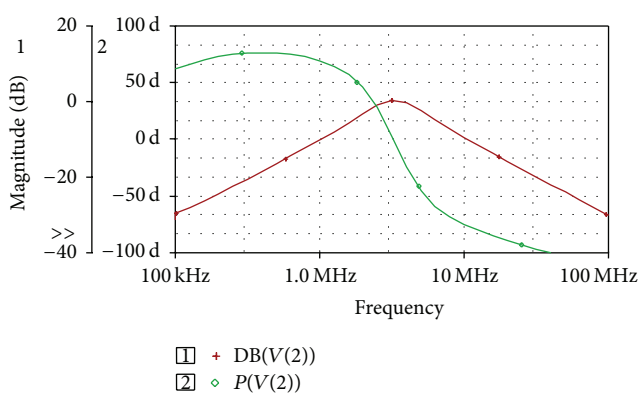

Figure 6: Simulated magnitude and phase response of the proposed BP filter.

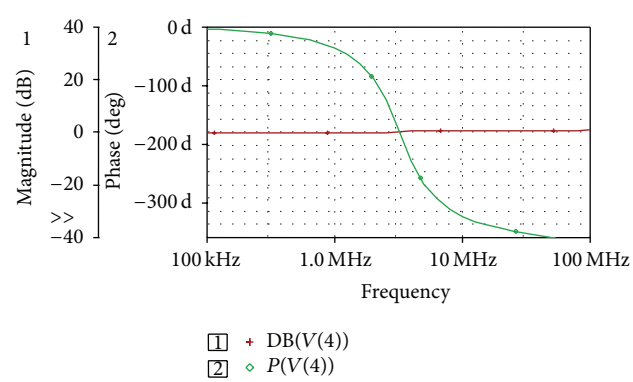

Figure 7: Simulated magnitude and phase response of the proposed AP filter.

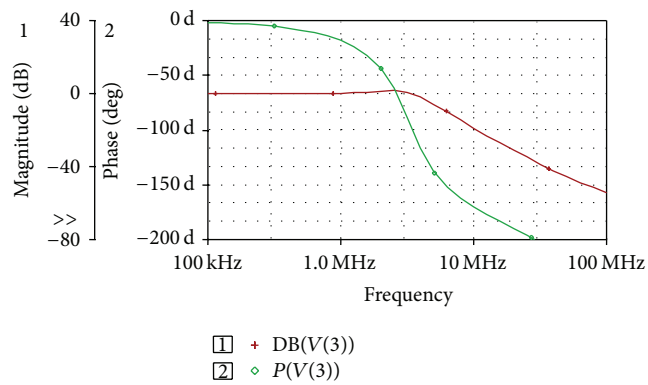

Figure 8: Simulated magnitude and phase response of the proposed LP filter.

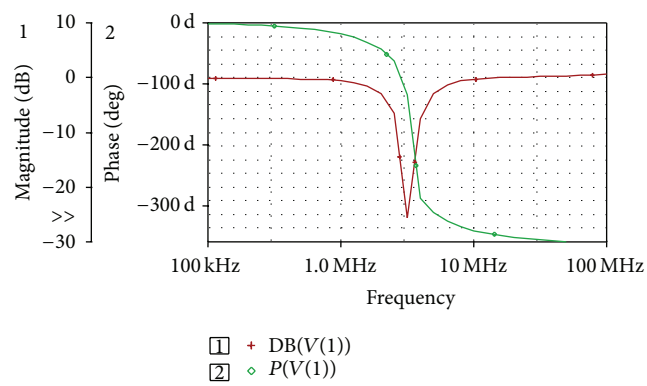

Figure 9: Simulated magnitude and phase response of the proposed NH filter.

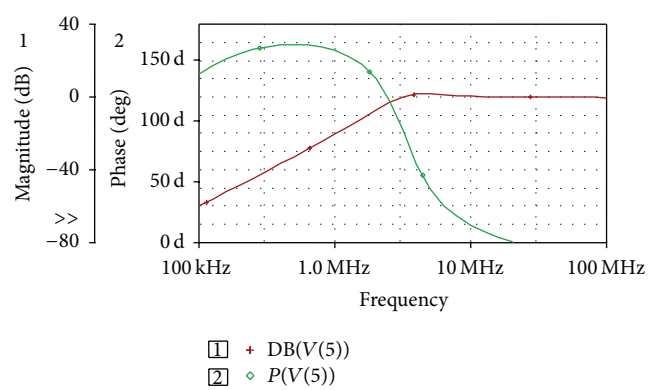

Figure 10: Simulated magnitude and phase response of the proposed HP filter.

of the LP, HP, BP, NH, and AP in dB are simultaneously shown in Figure 5. In addition, the magnitude and phase responses of all the generic filter responses are shown in Figures 6, 7, 8, 9, and 10, separately. To test the input dynamic range of the proposed filter, the sinusoidal input signal of an amplitude 300 mV (p-p) at 3.18 MHz is applied. Figure 11 shows the input and output sinusoidal signals of the band pass response. Figure 12 shows the noise behavior of the HP filter using the INOISE and ONOISE statements. Another study is carried out on the temperature performance of the proposed multifunction filter. Figure 13 shows the simulated frequency responses of the AP filter at different operating temperature. (−30°C to 90°C).

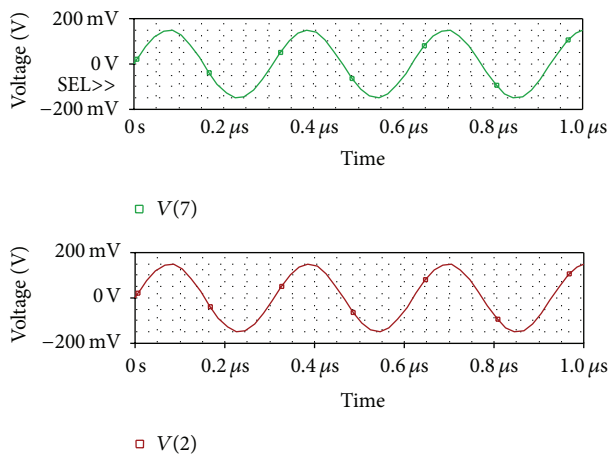

Figure 11: Time domain input and output waveforms for BP filter.

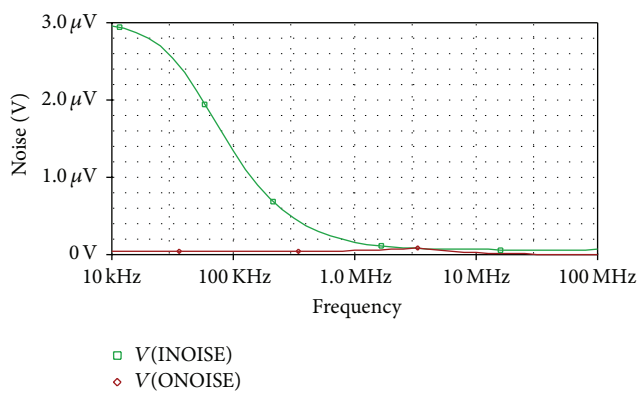

Figure 12: The input and output noise spectral densities for HP filter.

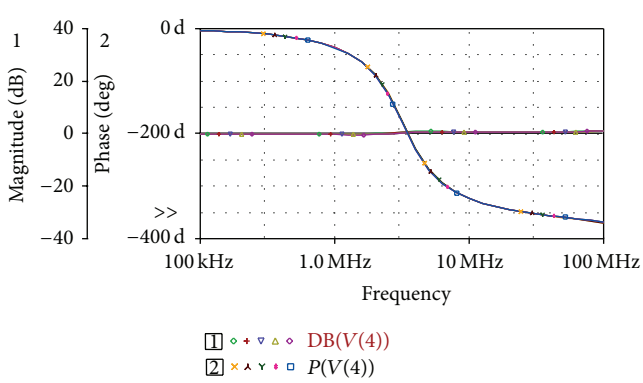

Figure 13: Frequency responses of the AP filter at different operating temperatures.

6. Conclusion

A new voltage-mode multifunction filter is presented. The proposed circuit realizes all generic filter responses simultaneously. Nevertheless, the proposed circuit needs a single matching constraint only to realize an AP response. The proposed circuit is simple and contains a minimum number of active components required to achieve a second-order transfer function. However, with the advantage of circuit simplicity, pole-ω_0 and Q are not independently adjustable. PSPICE simulations using 0.18 μm TSMC process parameters are used to support the validity and practical utility of the proposed circuit.

Conflict of Interests

The authors declare that there is no conflict of interests regarding the publication of this paper.

Acknowledgment

The authors thank Academic Editor for recommending this paper. At the time of paper submission paper processing charges for the journal were waived off.

References

[1] B. Wilson, "Recent developments in current conveyors and current-mode circuits," *IEE Proceedings Circuits, Devices and Systems*, vol. 137, no. 2, pp. 63–77, 1990.

[2] A. Fabre, O. Saaid, F. Wiest, and C. Boucheron, "Low power current mode second-order bandpass IF filter," *IEEE Transactions on Circuits and Systems II: Analog and Digital Signal Processing*, vol. 44, no. 6, pp. 436–446, 1997.

[3] M. A. Ibrahim, S. Minaei, and H. Kuntman, "A 22.5 MHz current-mode KHN-biquad using differential voltage current conveyor and grounded passive elements," *International Journal of Electronics and Communications*, vol. 59, no. 5, pp. 311–318, 2005.

[4] D. Biolek, R. Senani, V. Biolkova, and Z. Kolka, "Active elements for analog signal processing: classification, review, and new proposals," *Radioengineering*, vol. 17, no. 4, pp. 15–32, 2008.

[5] S. Maheshwari, "Analogue signal processing applications using a new circuit topology," *IET Circuits, Devices and Systems*, vol. 3, no. 3, pp. 106–115, 2009.

[6] M. T. Abuelma'atti and H. A. Al-Zaher, "New universal filter with one input and five outputs using current-feedback amplifiers," *Analog Integrated Circuits and Signal Processing*, vol. 16, no. 3, pp. 239–244, 1998.

[7] H. P. Chen, "Voltage-mode FDCCII-based universal filters," *AEU: International Journal of Electronics and Communications*, vol. 62, no. 4, pp. 320–323, 2008.

[8] H. P. Chen, "Single FDCCII-based universal voltage-mode filter," *International Journal of Electronics and Communications (AEU)*, vol. 63, no. 9, pp. 713–719, 2009.

[9] C. N. Lee and C. M. Chang, "Single FDCCII-based mixed-mode biquad filter with eight outputs," *AEU—International Journal of Electronics and Communications*, vol. 63, no. 9, pp. 736–742, 2009.

[10] S. Minaei and E. Yuce, "All-grounded passive elements voltage-mode DVCC-based universal filters," *Circuits, Systems, and Signal Processing*, vol. 29, no. 2, pp. 295–309, 2010.

[11] C. M. Chang, B. M. Al-Hashimi, C. L. Wang, and C. W. Hung, "Single fully differential current conveyor biquad filters," *IEE Proceedings: Circuits, Devices and Systems*, vol. 150, no. 5, pp. 394–398, 2003.

[12] M. A. Ibrahim, H. Kuntman, and O. Cicekoglu, "Single DDCC biquads with high input impedance and minimum number

of passive elements," *Analog Integrated Circuits and Signal Processing*, vol. 43, no. 1, pp. 71–79, 2005.

[13] C. M. Chang and H. P. Chen, "Single FDCCII-based tunable universal voltage-mode filter," *Circuits, Systems, and Signal Processing*, vol. 24, no. 2, pp. 221–227, 2005.

[14] H. P. Chen and Y. Z. Liao, "High-input and low-output impedance voltage-mode universal biquadratic filter using FDCCIIs," in *Proceedings of the 9th International Conference on Solid-State and Integrated-Circuit Technology (ICSICT '08)*, pp. 1794–1798, Beijing, China, October 2008.

[15] F. Kaçar and A. Yeşil, "Voltage mode universal filters employing single FDCCII," *Analog Integrated Circuits and Signal Processing*, vol. 63, no. 1, pp. 137–142, 2010.

[16] S. Maheshwari, J. Mohan, and D. S. Chauhan, "Novel Cascadable All-Pass/Notch Filters Using a Single FDCCII and Grounded Capacitors," *Circuits, Systems, and Signal Processing*, vol. 30, no. 3, pp. 643–654, 2011.

[17] F. Kaçar and A. Yeşil, "FDCCII-based electronically tunable voltage-mode biquad filter," *International Journal of Circuit Theory and Applications*, vol. 40, no. 4, pp. 377–383, 2012.

[18] S. Maheshwari and B. Chaturvedi, "Additional high input low output impedance analog networks," *Active and Passive Electronic Components*, vol. 2013, Article ID 574925, 9 pages, 2013.

[19] A. A. El-Adawy, A. M. Soliman, and H. O. Elwan, "A novel fully differential current conveyor and applications for analog VLSI," *IEEE Transactions on Circuits and Systems II: Analog and Digital Signal Processing*, vol. 47, no. 4, pp. 306–313, 2000.

[20] M. Bhushan and R. W. Newcomb, "Grounding of capacitors in integrated circuits," *Electronics Letters*, vol. 3, pp. 148–149, 1967.