Hindawi
Advances in Civil Engineering
Volume 2018, Article ID 6386020, 12 pages
https://doi.org/10.1155/2018/6386020

Research Article

The Construction Technology of Roof Steel Structure in YanCheng NanYang Airport

Qin Yang,[1] Shaole Yu,[2] Xuewei Zhang,[2] Zhijun Wang,[3] Junsheng Yan,[2] and Xinxi Chen[2]

[1]*East China Architectural Design & Research Institute Co., Ltd, Shanghai 200011, China*
[2]*China Construction Eighth Engineering Division Co., Ltd., Shanghai 200135, China*
[3]*Tongji University, Shanghai 200092, China*

Correspondence should be addressed to Shaole Yu; yushaole10@163.com

Received 14 July 2018; Revised 30 October 2018; Accepted 12 November 2018; Published 29 November 2018

Academic Editor: Geoffrey W. Rodgers

The roof steel structure in the Terminal 2 building of YanCheng NanYang Airport has a large span and a considerably difficult construction. According to the project characteristics, the construction scheme of the roof steel structure follows the principle of subareas and substeps, with the truss lifting in segmentation. To ensure construction safety, a construction monitoring scheme was adopted in this project. According to the layout of the roof steel structure, a total of 10 monitoring points are arranged to monitor the stress of the roof steel structure during the construction process. This paper first gives a brief introduction to the general situation regarding the engineering, followed by a detailed description of the construction scheme of such a roof steel structure. Then, the monitoring results, including monitoring of the main truss' stress and column head, are introduced. The monitoring results revealed that the variation of stress in monitoring points followed the same trend as the monitoring data. The maximum stress was 166.6 MPa according to the monitoring results, which indicate that the stress of the roof steel structure is in the elastic stage during the construction process and the construction scheme is feasible.

1. Introduction

For complex structures, there are great differences between the structural form in the construction process and the design-forming state, and construction "path," "time," and "mode" have a great influence on the construction process and the final state of completion. Structural monitoring systems are an important guarantee for construction safety and structural construction, which have been extensively employed in civil structures, particularly in connection with bridges and high-rise buildings [1]. For example, the 522 m Foyle Bridge girders' vibration, deflection, and strain responses were registered through various sensors [2]. The structural dynamic responses and deformations of the 12.9 km Confederation Bridge were obtained through an integrated monitoring system [3]. The Tsing Ma Bridge in Hong Kong was arranged with 500 accelerometers, a mass of strain gauges, and a set of global position systems to monitor its serviceability and safety, which will continue monitoring during its operation period [4]. The wind-induced response characteristics of high-rise buildings under strong wind conditions have been monitored through full-scale measurements in the research of Li et al. [5, 6]. The structural dynamic properties of a 280 m high and 65-story office tower have been monitored for the last ten years [7, 8]. Recently, a structural performance monitoring system that consists of more than 400 sensors was employed to monitor the Shanghai Tower during its construction and service stages [9]. The research by Marazzi et al. and Russo indicated that monitoring systems undoubtedly contribute to knowledge on the evolution of specific processes [10, 11]. The construction of a long-span spatial structure is considerably difficult, and the structural monitoring systems have seldom been applied in the construction process of airport terminals. In this paper, the roof steel structure in the Terminal 2 building of YanCheng NanYang Airport is taken as the engineering background, with a large span and trouble in assembling the roof trusses. According to the project

characteristics, the construction of the roof steel structure follows the principle of subareas and substeps, with the truss lifting in segmentation. To ensure construction safety, a construction monitoring scheme is adopted in this project. According to the layout of the roof steel structure, a total of 10 monitoring points are arranged to monitor the stress and strain of the roof steel structure during the construction process. First, a general introduction is given on the engineering of the problem, followed by the description of the technology used and the monitoring results, including stress of the main truss and column head.

1.1. General Situation of Construction. Yancheng is the home to the red-crowned crane, where the design of the terminal building expresses the conception that humans should get along with the red-crowned crane harmoniously. Therefore, the building model of the roof steel structure in YanCheng NanYang Airport Terminal 2 is of a complicated surface type, like a red-crowned crane spreading its wings, as shown in Figure 1. The total area of the YanCheng NanYang Airport Terminal 2 building is 49000 square meters, with two floors above ground and one floor under ground. The aboveground area is 27708 square meters, and the underground area is 19570 square meters. The roof steel structure has a longitudinal span of 216 meters and 108 meters in the lateral direction and a height of 27 meters. These characteristics of large span, complex structure, and part cantilever in the roof steel structure hence result in construction difficulties.

1.2. Roof Steel Structure. The roof steel structure is a "w"-shaped double-layer reticulated shell, as shown in Figure 2. The gross weight of the roof steel structure is more than 1800 tons. The "w"-shaped double-layer reticulated shell is composed of the longitudinal truss, the transverse truss, the diamond skylight, and the edge-sealing beam which is supported by 18 concrete-filled square steel columns. The truss is mainly composed of circular pipes connected by intersecting joints, whereas the weight of the truss is more than 1200 tons. There are 9 diamond skylights, which are composed of box section girders, and their weight is more than 200 tons. The edge beam is located outside the cantilevered truss, with the weight being more than 350 tons. The "w"-shaped double-layer reticulated shell is connected to the steel columns through the prefabricated hinge installed at the top of the columns.

2. Construction Difficulties and Solutions

The major difficulties in the construction of the YanCheng NanYang Airport Terminal 2 roof steel structure are the large span of the roof structure and complex structure modeling, specifically shown as follows:

(1) The longitudinal span of the Terminal 2 building is 108 meters and the lateral span is 216 meters, which induces a longer component length and a large area of construction operation. This results not only in inconvenience in transportation and installation of the component but also in difficulty in the construction organization.

(2) The roof steel structure is made up of a "w"-shaped double-layer reticulated shell and a hyperboloid single-layer lattice shell. The complex structure modeling brings on a varied curvy shape, diversified structural components, and a cantilever span of more than 40 meters, which results in an increase in the difficulty of security control in the construction process.

For the convenience of transportation, the trusses are segmented in the factory, and each section is about 18 meters. For installation convenience, a temporary connecting plate is designed on each section at the stage of deepening design. In order to resolve the construction organization problem, the whole construction procedure of the roof steel structure is divided into several shorter ones according to structure modeling and it adopts a flow process.

To ensure construction safety, a construction monitoring scheme is adopted in this project. According to the layout of the roof steel structure, a total of 10 monitoring points are arranged to monitor the stress and strain of the roof steel structure during the whole construction process.

3. Construction Plan

Due to the large area of construction operation, the construction of the roof steel structure follows the principle of subregions. Based on the roof shape and the characteristics of this project, the roof is divided into three subregions (Section 1, Section 2, and Section 3), as shown in Figure 3. The construction sequence is to install first Section 1 zones, followed by Section 2 zones and finally Section 3 zones. The area of Section 1, Section 2, and Section 3 is 9100 m^2, 3780 m^2, and 9100 m^2, respectively, with Section 1 and Section 3 being symmetric regions. In each region, the installation of the roof steel structure adopts the construction method step by step: firstly, the longitudinal main truss between the steel columns is installed. Secondly, the transverse main truss between the steel columns is installed. Then, the secondary truss between the main trusses is installed, and after the secondary truss is installed, the skylights and other roof components are mounted. At the same time, the truss in the cantilever area is installed through setting up a temporary support. Finally, the edge-sealing beam is closed. This whole construction process is shown in Figure 4.

3.1. The Segmentation of the Roof Truss. The longitudinal span of the steel roof is 108 meters and the lateral span is 216 meters, with the space of concrete-filled square steel columns being 36 meters in both directions. For the convenience of transportation and installation, the trusses are divided into small sections in the factory, and each section is 18 meters. A unified truss number was developed to organize construction conveniently. There are 3 horizontal main trusses and 6

(a)

(b)

Figure 1: Working sketches of YanCheng NanYang Airport Terminal 2 building: (a) overhead view and (b) side view.

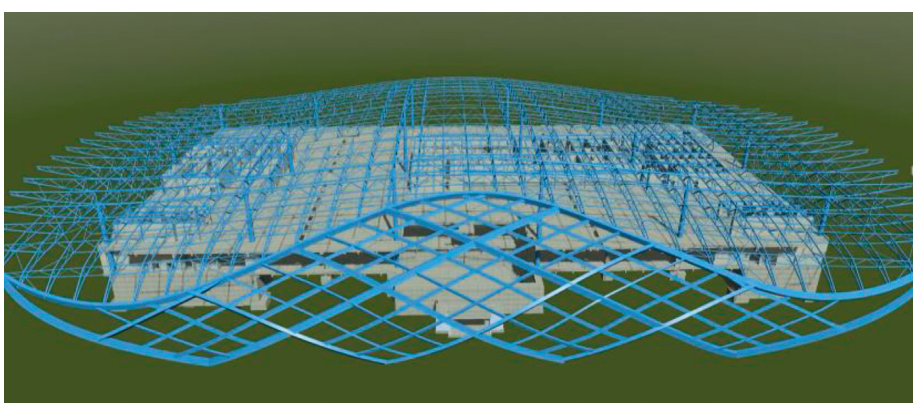

Figure 2: Diagram of the roof steel structure.

longitudinal main trusses. As shown in Figure 5(a), the denomination of the main horizontal trusses is HT-1, HT-2, and HT-3, respectively. The longitudinal trusses are identified as LT-4, LT-5, and LT-6, respectively, with the number on the other side of the symmetrical position having the same number. This is shown in Figure 5(b). The diameter of the lower chord in the longitudinal main trusses LT-4, LT-5, and LT-6 is larger than that in the horizontal main trusses HT-1, HT-2, and HT-3. Moreover, the diameter of the upper chord in the longitudinal main trusses LT-4, LT-5, and LT-6 is smaller than that in the horizontal main trusses HT-1, HT-2, and HT-3. Therefore, the longitudinal main trusses (LT-4, LT-5, and LT-6) are a through truss, with the segment points in the longitudinal main truss passing through the concrete-filled square steel column supports.

A temporary connecting plate is designed on each section at the stage of deepening design to facilitate site lifting, positioning, and assembling. The temporary connecting plate should have enough safety factor to ensure that the strength of the temporary connecting plate is as strong as the trusses themselves. As shown in Figure 6, the connection between the sectional trusses can be directly fixed through the temporary ear plate, which can shorten the hoisting time and improve the installation efficiency.

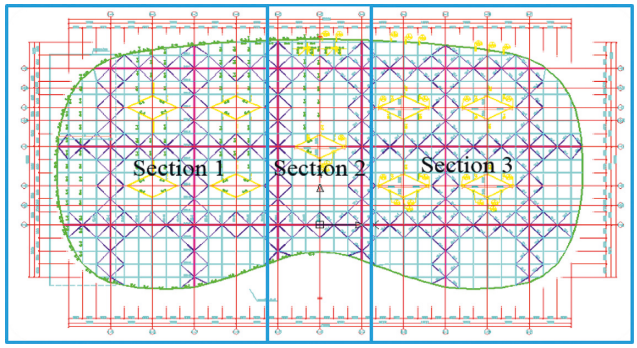

Figure 3: Subarea diagram of the roof steel structure.

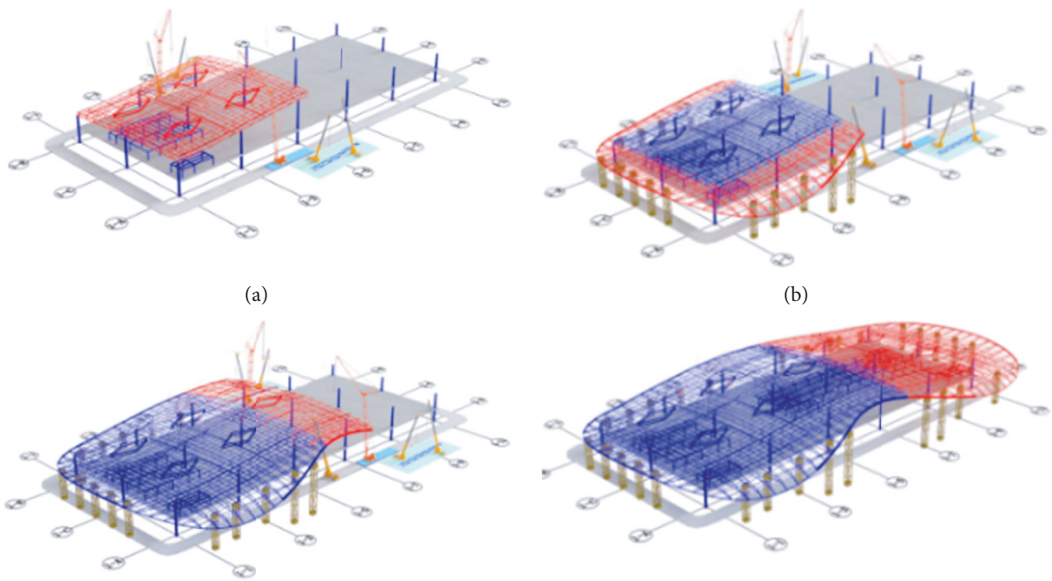

Figure 4: Installation diagram of the roof steel structure. (a) Section 1 roof truss hoisting. (b) Section 1 cantilever truss hoisting. (c) Section 2 roof truss hoisting. (d) Section 3 roof truss hoisting.

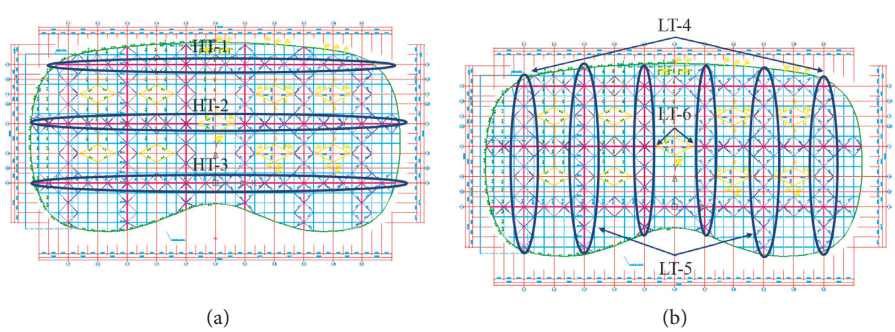

Figure 5: Segmentation diagram of the horizontal truss (a) and longitudinal truss (b).

3.2. The Arrangement of the Temporary Lattice Column. The truss extends in a deep overhang and longer than 40 m, which results in the overhanging area accounting for 40% of the total roof area. The cantilevered truss is unsupported, and the overhanging truss is assembled integrally. Thus, the installation of cantilevered parts is a difficult construction procedure. In order to solve the problem of truss installation in the overhanging area, the temporary lattice column support is installed at the far end of the cantilever truss. This temporary lattice column is used as a support, and the far end of the cantilevered truss is located on this same temporary lattice column.

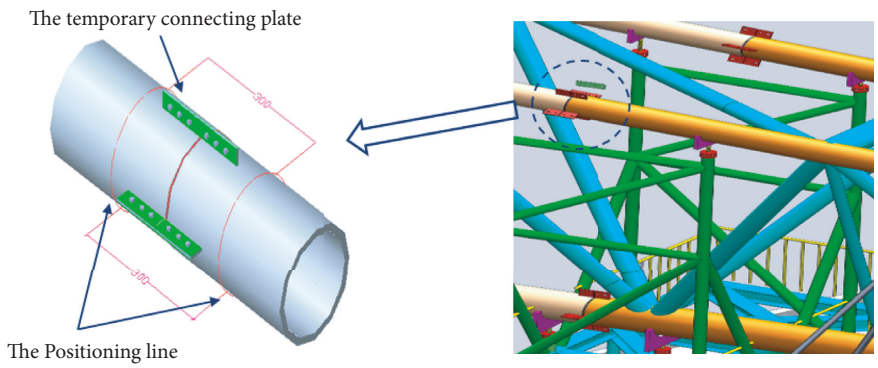

Figure 6: Diagram of the temporary connecting plate.

According to the distribution of the overhanging area, a total of 48 temporary lattice columns are installed. As shown in Figure 7, the temporary lattice columns are symmetrically arranged in west and east regions, with 7 temporary lattice columns in each region. There are 15 temporary lattice columns in the north region and 19 temporary lattice columns in the south region. The calculation and analysis showed that the maximum reaction force of the temporary lattice column is 492 kN. Therefore, the section dimension of the temporary lattice columns is designed to be 1.5 m × 1.5 m. The vertical pole is composed of 4 round steel pipes with a diameter of 160 mm and a thickness of 8 mm. An equal-angle steel, with a length of 76 mm and a thickness of 6 mm, is adopted to connect the vertical pole. The temporary lattice columns are connected by horizontal steel beams to increase stability. In order to further enhance the lateral stability of the temporary lattice columns, four cables are installed on each lattice column, and the cables are fixed on the concrete floor through the embedded parts.

3.3. The Preassembly of the Roof Steel Structure and Ground Installation

3.3.1. The Preassembly of the Roof Steel Structure. The roof steel structure is in irregular curve shape, and the requirement of component fabrication is high. Therefore, the preassembly work is required before the components are delivered from the factory to check the accuracy of production so as to eliminate or reduce the process errors. The support frame used for preassembly is welded by an I-beam, with the temporary steel beam used to adjust the elevation to meet the assembly requirements. Throughout the preassembly of components, the production and assembly accuracy of the components can be checked, ensuring a smooth lifting of the components and reducing the installation adjustment time, especially in the process of high-altitude installation. Moreover, the manufacturing error can be controlled in the future processing by analyzing the causes or deficiencies in the process. After confirming the accuracy of the preassembly, the installation position line is made at each preassembly joint, and then the temporary connection plate is welded on the pipe.

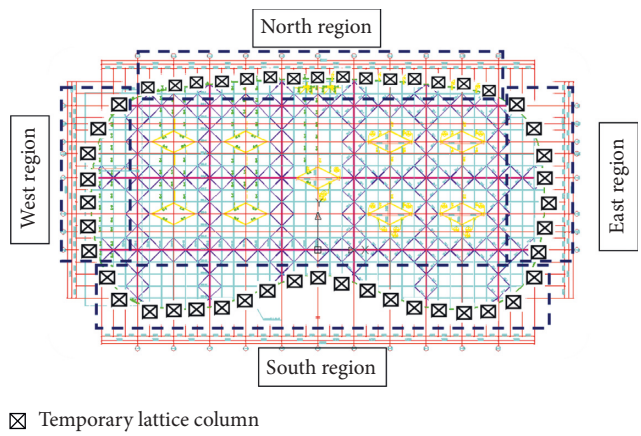

Figure 7: The layout of the temporary lattice column.

3.3.2. The Field Assembly of the Roof Steel Structure. When the components are transported to the site, they need to be assembled. The roof steel structure is assembled on-site through the support frame, with the continuous horizontal splicing method being adopted, as shown in Figure 8. Before assembling the components, the ground first has to be levelled and then compacted using a roller machine. A plain concrete layer with 100 mm thickness is poured on the ground to ensure that it meets the requirements of steel structure assembly flatness and strength. A 25-ton crawler crane is arranged as the assembling machine on-site, according to component size, site layout, and transportation requirements of the components.

3.4. The Installation of the Roof Steel Structure. As mentioned above, the roof steel structure is divided into three subregions. In each region, the longitudinal and transverse main trusses between the steel columns are installed. Then, the secondary truss between the main trusses is assembled. Finally, the skylights and other roof components are installed. At the same time, the truss in the cantilever area is installed through setting up a temporary support. The edge-sealing beam is closed after the truss installation is completed.

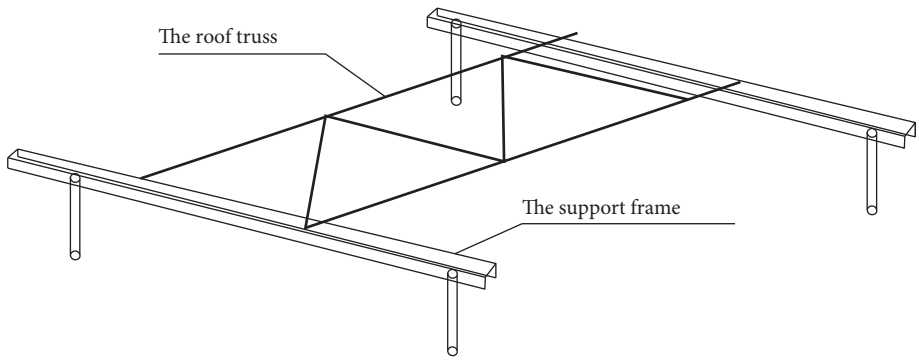

Figure 8: Horizontal assembling of the truss.

3.4.1. The Installation Procedure of the Roof Steel Structure. When the main truss is hoisted, the required hoisting radius is 18 meters and the required hoisting height is 36 meters, with the heaviest main truss being 30 tons. Therefore, two 250-ton crawler cranes are used to install the main truss. When the cantilevered truss is hoisted, the required hoisting radius is now 10 meters, whereas the required hoisting height is 35 meters. The heaviest cantilevered truss is 10 tons. Hence, a 130-ton crawler crane is used to install the cantilevered truss. The installation procedure of the roof steel structure is shown in Figure 9.

After concrete is poured in the taper column and the finished supports are installed, the truss is hoisted above the roof with a crawler: when the main truss is hoisted, the biggest hoisting radius is around 18 meters, the hoisting height is around 36 meters, the heaviest main truss is around 30 tons, and two 250-ton crawler cranes are used to execute the truss hoisting above the roof. When the overhanging truss is hoisted, the biggest hoisting radius is around 10 meters, the hoisting height is around 35 meters, the heaviest overhanging truss is around 10 tons of weight, and one 130-ton crawler crane is used to execute the hoisting. According to the field construction condition and the road condition, Section 1 is installed first from LT-6 to LT-4, followed by Section 2 and finally Section 3. The installation procedure is shown in Figure 9 (the installation procedure of Section 3 is the same as that of Section 1).

3.4.2. Setting Up Cables for Main Trusses. There is no lateral support during the installation of the main truss, which induces the instability of the main truss. In order to enhance the lateral stability of the main truss during the installation process, four cables are installed on the main truss between two steel columns, as shown in Figure 10. One end of the cable is connected on the upper chord of the truss, whereas the other is fixed on the ground. Once the horizontal main truss and the longitudinal main truss form a stable system, the cable can be removed. Then, the installation of the secondary truss and skylight between the main trusses can be carried out. There are 2 cables installed on the cantilevered truss, with one end of the cable being connected on the upper chord at the midpoint of the cantilever length and the other end being fixed on the ground.

3.4.3. Accuracy Control of the Truss Installation. Measurement is one of the key points in the construction of steel structures. Through high-precision measurement, the steel structure installation can meet the designing accuracy. Therefore, measurement control is the key process to ensure the installation accuracy of steel structures and the progress of the project. The measurement accuracy control is divided into two stages: field assembling precision control and high-altitude hoisting precision control.

(1) Field Assembling Precision Control. When the components are assembled at the scene, the centerline control points of the lower chord are marked on the support frame in advance. The accuracy of the centerline control points is measured by a total station, the length error is controlled in the range of 1/15000, and the angle error is controlled in the range of 6″. As the truss is assembled in sections, a connection node control is required for each segment. The control points of the connection node are also needed to be marked on the support frame in advance, with the control point accuracy also being measured by a total station. Moreover, the connection lines between the centerline control points pass through this connection node.

(2) High-Altitude Hoisting Precision Control

(a) Truss elevation control: according to the truss segment, the intersection of the lower chord and nearest web to the segment point can be selected as the elevation control point. The elevation of the control point is measured by the level instrument and then compared to the corresponding design elevation, with the elevation control target being ±5 mm.

(b) Straightness control of the truss: the centerline of the lower chord is projected as a straight line on the horizontal plane. Therefore, the straightness of the truss can be controlled by checking the straightness of lower chords.

(c) Vertical control of the truss: after the main truss is hoisted in place, the axis of the connecting plate and the axis of the truss are measured with the theodolite and level instrument. When the two axes coincide, the main truss can be welded. After the main truss in both directions forms a stable system, the elevation

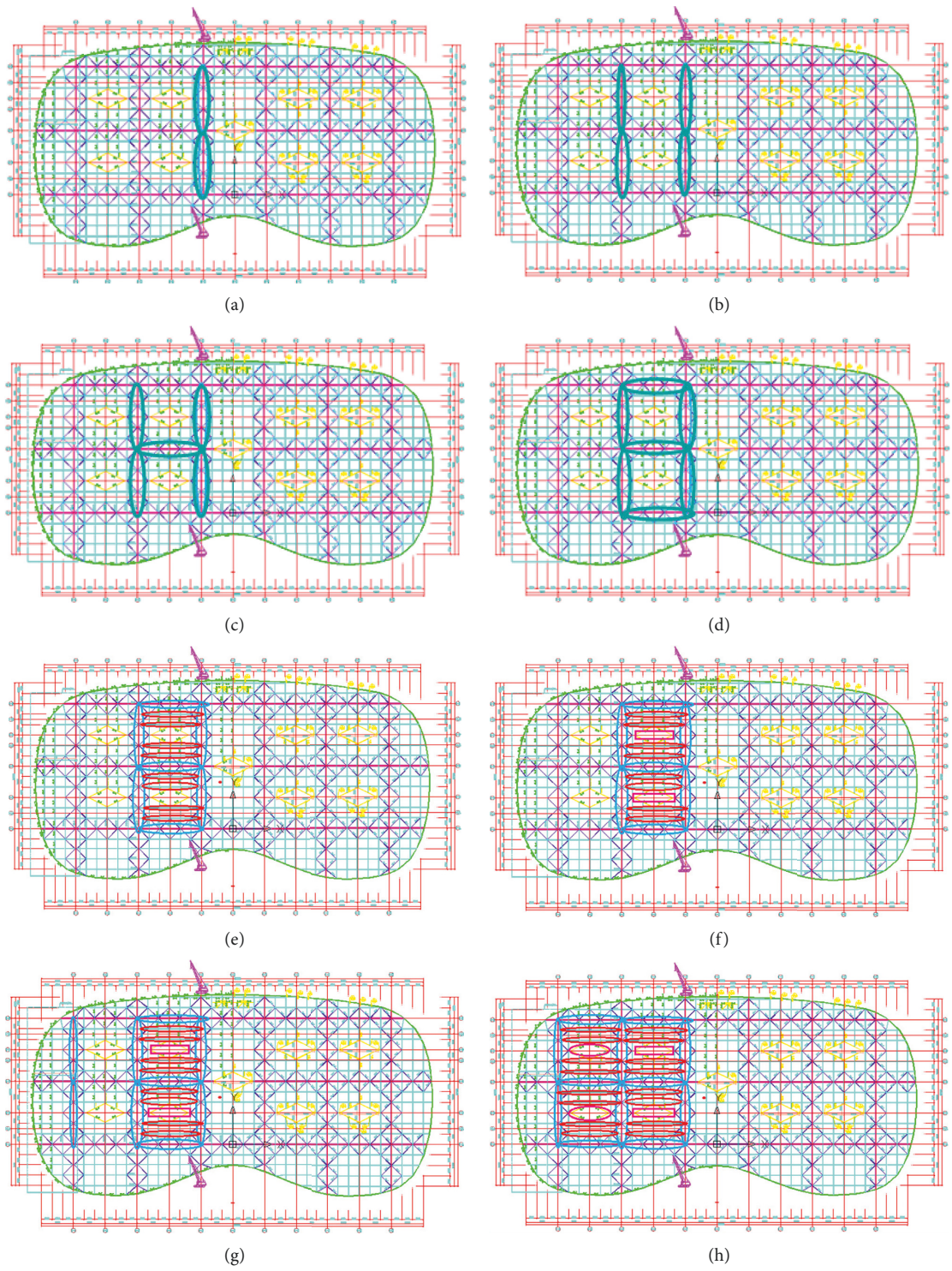

Figure 9: Continued.

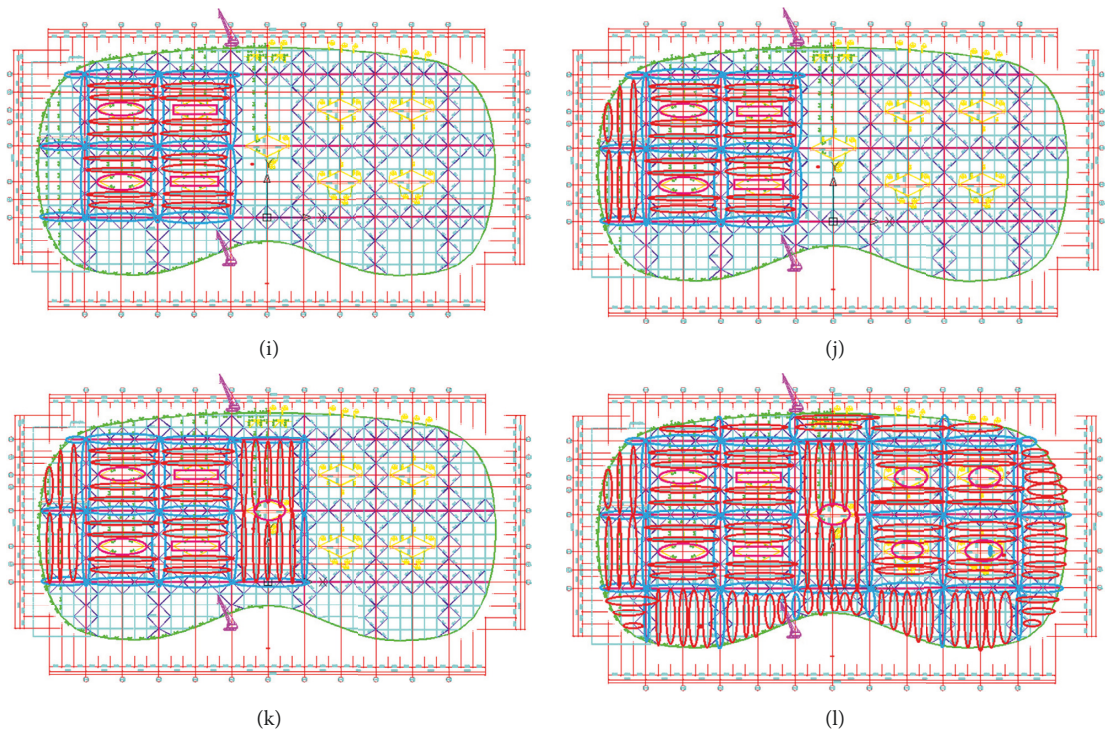

Figure 9: Installation progress of the roof steel structure: (a) LT-6 installation; (b) LT-5 installation; (c) HT-2 installation; (d) HT-1 and HT-3 installation; (e) the installation of the secondary truss between LT-6 and LT-5; (f) the installation of the skylight between LT-6 and LT-5; (g) LT-4 installation; (h) the installation of components between LT-4 and LT-5; (i) the installation of the cantilevered main truss; (j) the installation of the cantilevered secondary truss; (k) the installation of components in Section 2; (l) the installation of components in Section 3.

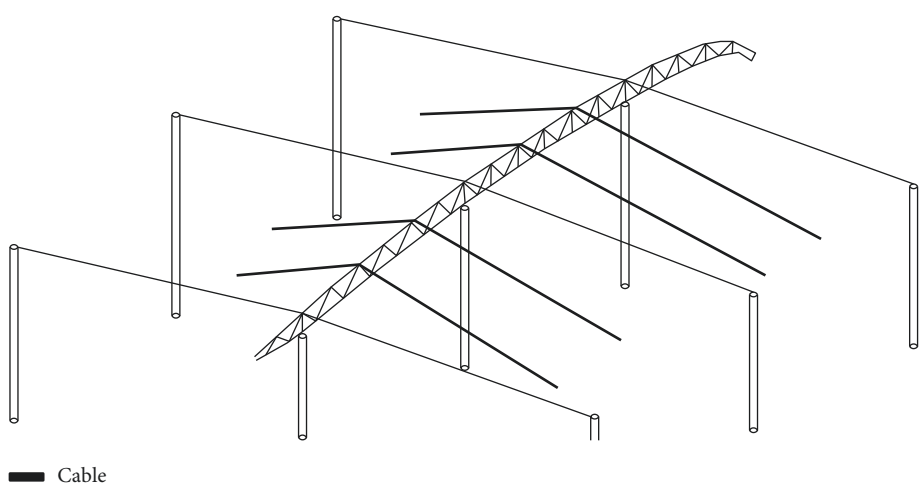

Figure 10: Diagram of the cable in the primary truss.

control points are used to transfer the elevation from the control point to the supporting steel columns, which facilitates the verticality control of the secondary truss. When the secondary truss is hoisted in place, the elevation and axis of the truss are checked again with the theodolite and level instrument. The allowable value of perpendicularity deviation is 10 mm.

(d) The measurement of truss bending deflection: the bending deflection of the truss is determined by measuring the elevation change of control points before and after the truss is separated from the support frame. There are 3 control points in the main truss supported by two steel tube columns: 2 control points, respectively, arranged at two support ends and 1 control point arranged at the midspan of truss.

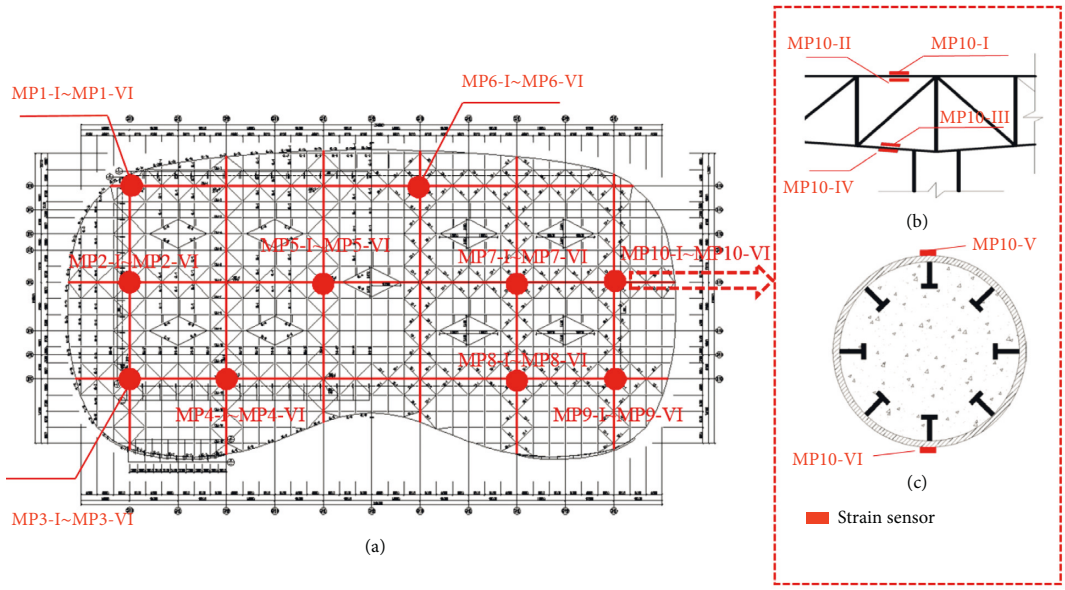

Figure 11: Diagram of (a) monitoring points, (b) strain sensor in the mass truss, and (c) strain sensor in the column head.

There is 1 control point in the cantilevered truss, which is arranged at the three-point position near the free end.

4. Monitoring Scheme and Monitoring Results

4.1. Monitoring Scheme. To ensure construction safety, a construction monitoring scheme is adopted in this project. The roof steel structure in the Terminal 2 building is a complex steel structure system, which is composed of steel truss structure units. The roof steel structure span is large, the length of the single-sided cantilever is more than 40 m, and the main truss is extremely complicated and stressed. Therefore, the stress and strain of the roof steel structure are the main monitoring subjects. According to the layout of the roof steel structure, a total of 10 monitoring points are arranged, with four monitoring points being arranged in Section 1, two monitoring points being arranged in Section 2, and four monitoring points being arranged in Section 3. The label of monitoring points is shown in Figure 11(a). The monitoring of each point includes the stress and strain of the main truss and column head. The loads on the intersection of the main truss and column are complicated; thus, 4 strain sensors are arranged on the upper and lower chords at the intersection of the main truss and the column, with the label of strain sensor on the truss shown in Figure 11(b). 2 strain sensors are arranged on the column head at the intersection of the main truss and the column, with the label of strain sensor on the column shown in Figure 11(c). The first two letters "MP" in the designation represent the monitoring point. The next letter is the number of the monitoring point. The roman numerals represent the location of the strain sensor.

4.2. Monitoring Results. The monitoring equipment started its operation on March 15, 2017, and the roof steel structure was finished on August 25, 2017. The monitoring data time range was from March 15, 2017, to November 25, 2017. The monitoring results are plotted in Figure 12. The monitoring results reveal that the variation of stress in the monitoring points follows the same trend. In the early stage of construction, the stress gradually increases with time. As the construction progresses, the stress tends to stabilize. The maximum stress of the main truss in Section 1 is 166.6 MPa, which is found in MP4-I. The maximum stress of the column head in Section 1 is 81.3 MPa, which is found in MP4-VI. The maximum stress of the main truss in Section 2 is 104.9 MPa, which is found in MP5-IV. The maximum stress of the column head in Section 2 is 51.4 MPa, which is found in MP5-V. The maximum stress of the main truss in Section 3 is 158.6 MPa, which is found in MP8-II. The maximum stress of the column head in Section 2 is 62.3 MPa, which is found in MP8-V. The materials for the main truss and the column were both Q345, and the steel presented a yield strength of 345 MPa. It can be concluded that the stress of the roof steel structure is in the elastic stage during the construction process and the construction scheme is feasible. The stress monitored from MP3, MP4, MP8, and MP9 is larger than that measured by the other measuring points. The difference is attributed to the location of MP3, MP4, MP8, and MP9, close to the cantilevered area.

5. Conclusion

The roof steel structure in the YanCheng NanYang Airport Terminal 2 building has a longitudinal span of 216 meters and 108 meters in the lateral direction, with 27 meters of height. The characteristics of large span, complex structure, and part cantilever in the roof steel structure result not only in inconvenience in transportation and installation of the component but also in difficulty in construction organization. For the convenience of transportation, the trusses are

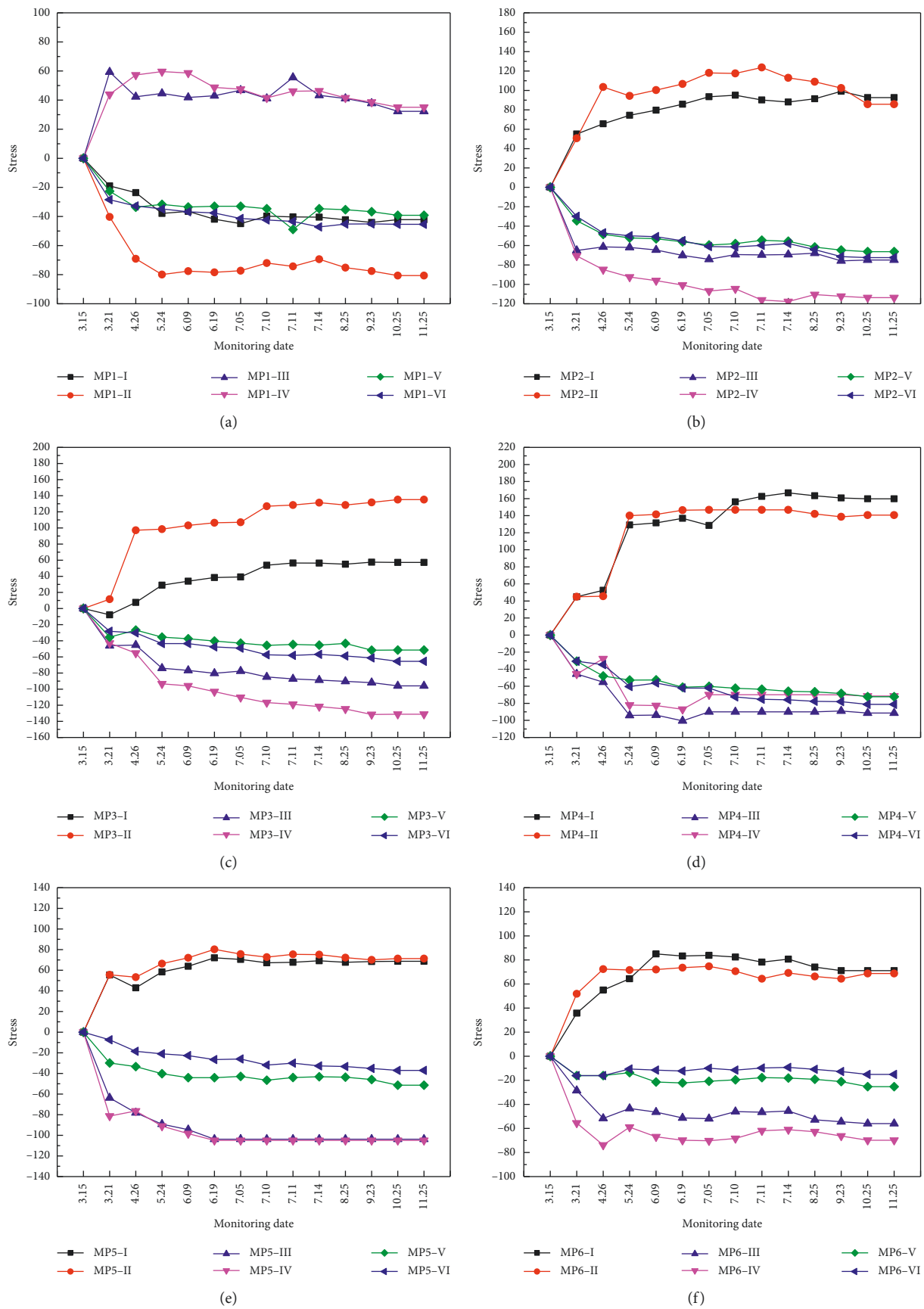

Figure 12: Continued.

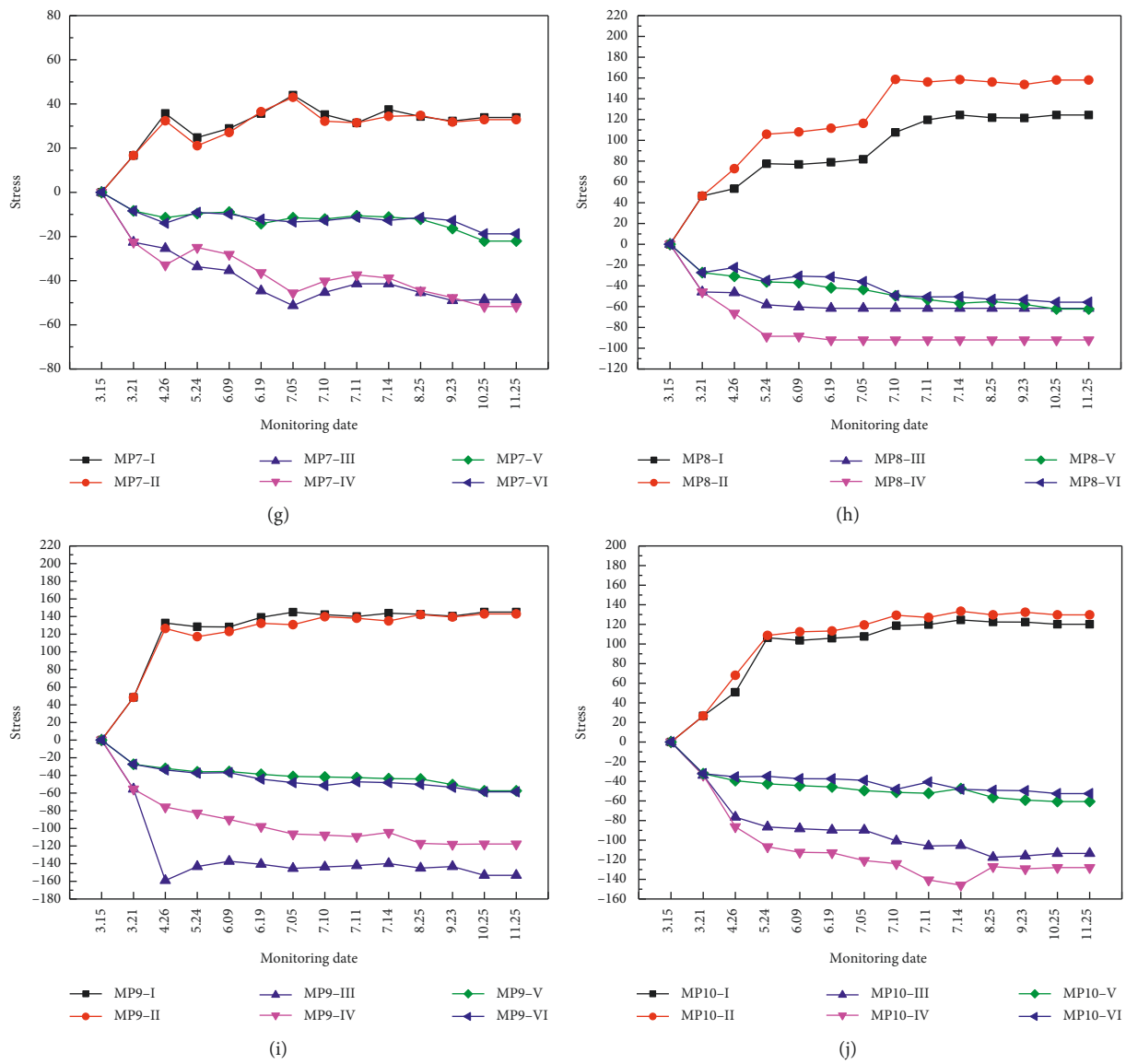

Figure 12: Monitoring result. (a) Monitoring point 1. (b) Monitoring point 2. (c) Monitoring point 3. (d) Monitoring point 4. (e) Monitoring point 5. (f) Monitoring point 6. (g) Monitoring point 7. (h) Monitoring point 8. (i) Monitoring point 9. (j) Monitoring point 10.

segmented in the factory, and a temporary connecting plate is designed on each section at the stage of deepening design for the convenience of installation. In order to resolve the construction organizing problem, the whole construction procedure of the roof steel structure is divided into several shorter ones according to structure modeling and a flow process is adopted. The detailed construction process of the airport was introduced, including the segmentation and preassembly of the roof truss, the arrangement of the temporary lattice column, the installation procedure of the roof steel structure, and accuracy control of the truss installation. To ensure construction safety, a construction monitoring scheme was adopted in this project. The monitoring results revealed that the variation of stress in monitoring points followed the same trend. The maximum stress of the main truss was 166.6 MPa and the maximum stress of the column head was 81.3 MPa, which were found in MP4-I and MP4-VI, respectively. The stress of the roof steel structure was in the elastic stage during the construction process, which reveals that the construction scheme was feasible.

Data Availability

The datasets generated during the current study are available from the corresponding author on reasonable request.

Conflicts of Interest

The authors declare that there are no conflicts of interest regarding the publication of this paper.

Acknowledgments

The research reported herein was supported by Research Grant No. 16DZ2250600 with funds given by the Shanghai Committee of Science and Technology.

References

[1] G. W. Housner, L. A. Bergman, T. K. Caughey et al., "Structural control: past, present, and future," *Journal of Engineering Mechanics*, vol. 123, no. 9, pp. 897–971, 1997.

[2] T. D. Sloan, J. Kirkpatrick, J. W. Boyd, and A. Thompson, "Monitoring the inservice behaviour of the Foyle bridge," *Structural Engineer*, vol. 70, no. 7, 1992.

[3] M. S. Cheung, G. S. Tadros, T. Brown, W. H. Dilger, A. Ghali, and D. T. Lau, "Field monitoring and research on performance of the confederation bridge," *Canadian Journal of Civil Engineering*, vol. 24, no. 6, pp. 951–962, 1997.

[4] K. Y. Wong, "Instrumentation and health monitoring of cable-supported bridges," *Structural Control and Health Monitoring*, vol. 11, no. 2, pp. 91–124, 2004.

[5] Q. S. Li, J. R. Wu, S. G. Liang, Y. Q. Xiao, and C. K. Wong, "Full-scale measurements and numerical evaluation of wind-induced vibration of a 63-story reinforced concrete tall building," *Engineering Structures*, vol. 26, no. 12, pp. 1779–1794, 2004.

[6] Q. S. Li, Y. Q. Xiao, J. Y. Fu, and Z. N. Li, "Full-scale measurements of wind effects on the Jin Mao building," *Journal of Wind Engineering and Industrial Aerodynamics*, vol. 95, no. 6, pp. 445–466, 2007.

[7] J. M. Brownjohn, "Structural health monitoring of civil infrastructure," *Philosophical Transactions of the Royal Society of London A: Mathematical, Physical and Engineering Sciences*, vol. 365, no. 1851, pp. 589–622, 2007.

[8] J. M. W. Brownjohn, T. C. Pan, and H. K. Cheong, "Dynamic response of Republic Plaza, Singapore," *Structural Engineer*, vol. 76, pp. 221–226, 1998.

[9] J. Z. Su, Y. Xia, L. Chen et al., "Long-term structural performance monitoring system for the Shanghai tower," *Journal of Civil Structural Health Monitoring*, vol. 3, no. 1, pp. 49–61, 2013.

[10] F. Marazzi, P. Tagliabue, and F. M. Corbani, "Traditional vs innovative structural health monitoring of monumental structures: a case study," *Structural Control and Health Monitoring*, vol. 18, no. 4, pp. 430–449, 2011.

[11] S. Russo, "On the monitoring of historic Anime Sante church damaged by earthquake in L'Aquila," *Structural Control and Health Monitoring*, vol. 20, no. 9, pp. 1226–1239, 2013.