Hindawi
Advances in Civil Engineering
Volume 2019, Article ID 3438743, 12 pages
https://doi.org/10.1155/2019/3438743

Research Article

Correlation of Surface Cracks of Concrete due to Corrosion and Bond Strength (between Steel Bar and Concrete)

Charis Alk. Apostolopoulos,[1] **Konstantinos F. Koulouris**,[2] **and Alkiviadis Ch. Apostolopoulos**[3]

[1]*Associate Professor, Dr. Ing Civil Engineer, Department of Mechanical Engineering and Aeronautics, University of Patras, Patras 26500, Greece*
[2]*PhD Candidate, Civil Engineer, Department of Mechanical Engineering and Aeronautics, University of Patras, Patras 26500, Greece*
[3]*Dr. Ing Civil Engineer, University of Patras, Patras 26500, Greece*

Correspondence should be addressed to Charis Alk. Apostolopoulos; charrisa@upatras.gr

Received 29 August 2018; Revised 12 December 2018; Accepted 15 January 2019; Published 4 February 2019

Academic Editor: Carlos Chastre

The current experimental study presents the results of bond strength loss (steel bar concrete) due to the corrosion damage of steel bar specimens, semiembedded in concrete, at various times of exposure to corrosive environment. In this case, a correlation was made between the width of the surface cracks of concrete caused by reinforcing steel corrosion and bond strength for different distances between stirrups and different cover thickness of concrete. The study indicates close relationship between the width of surface cracking, the percentage mass loss of embedded reinforcing bar, the distance between stirrups, and the cover thickness. In addition, mathematical predictive models of bond strength loss of corroded specimens were proposed. The model outcomes showed that the cracking development on concrete surface up to a width of 1.6 mm is accompanied by an exponential reduction of bond strength loss between steel reinforcement and concrete. Furthermore, the investigation has shown that the increase of transverse reinforcement (stirrups) percentage and the cover thickness play a significant role in durability of reinforced concrete elements and in bond strength maintenance between rebar and concrete.

1. Introduction

Corrosion of reinforcement steel consists of one of the main degradation problems in reinforced concrete structures. In many coastal regions, where the prevailing high (mean) temperature is combined with high concentration of chlorides, the corrosion phenomena are intense [1]. Typical examples are regions of countries of the Mediterranean basin like Greece, Cyprus, Italy, and Egypt where these phenomena are worse than in regions of North European countries. The consequences of these phenomena have an impact both on durability-mechanic response-sufficiency (safety) of structures and on financial resources required for their rehabilitation and repair work. Recent reports have shown that a significant part of the annual budget of many countries is spent on maintenance, repair, and rehabilitation of reinforced concrete structures due to corrosion damage [2, 3]. However, even though degradation of the durability of the structure and reinforcing steel corrosion are interdependent phenomena and parallel and time-dependent, they are not (adopted by) taken into account in the regulatory texts for the structures assessment and redesign as they have not been sufficiently quantified.

According to the existing knowledge, corrosion is an electrochemical process, in which steel tends to return to its original form (ore) by forming iron oxides on its surface (rust). Originally, the surrounding concrete protects the steel reinforcement acting as a physical barrier and forming a thin protective film of hydrated iron oxide at its interface with steel, because of the high alkalinity of concrete (pH~12.5).

Nevertheless, aggressive environmental factors gradually penetrate the concrete through its pores, and when chloride ions reach a critical concentration rate in conjunction with the pH drop, steel reinforcement depassivates, and corrosion initiates [4].

The consequences of corrosion damage on the mechanical properties of the steel reinforcement are significant and well-documented, especially when it comes from chlorides action [5–7]. Corrosion process results in embedded steel by producing and forming oxides (rust), which occupy 2 to 6 times greater volume of the attacking mass [8], causing tensile stresses in surrounding concrete and, thereafter, leading to gradual concrete cracking development and spalling of the cover concrete [9], as is shown in Figure 1.

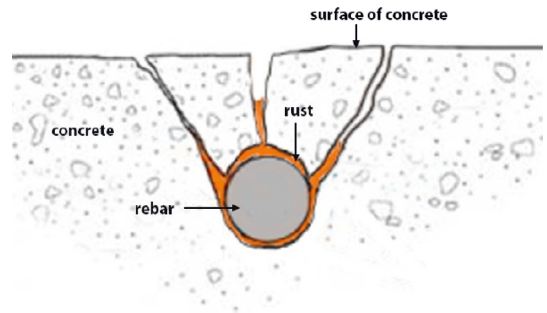

Figure 1: The development of iron oxides at the surrounding concrete is accompanied by tensile stresses and surface cracks.

Generally, cracks are inherent in reinforced concrete structures and are caused by a number of different types of actions. One of the most severe forms of cracking in hardened reinforced concrete structures is the result of the corrosion of steel reinforcing bars. However, in accordance with Eurocode 2 [10], the appearance of cracks, with limited width does not necessarily imply a lack of serviceability or durability of reinforced concrete structures. Nonetheless, in practice, when cracks develop in regions surrounding the reinforcing bars, the force transfer is affected and this can lead to lower anchorage capacities or an altered bond behavior. Hence, apart from the negative effects on the mechanical performance of steel, like strength reduction and ductility loss, corrosion is associated with negative consequences for bond strength between steel and concrete [11, 12]. It is known that the reliability of the bonding forces between steel and concrete is mainly determined by chemical adhesion, friction, and mechanical interlock between steel bar and surrounding concrete [13]. The investigation of corrosion effect on bond between steel reinforcement and concrete has been studied by many researchers [14–17]. Li and Zheng [17] showed that the mechanical degradation of bonding is affected by a number of factors such as rebar geometry, its surface profile, concrete composition, compressive strength of concrete, and cover thickness c. Maslehuddin et al. [18] showed that on reinforced concrete specimens without stirrups, even though low corrosion damage of steel temporarily improves bond strength, rapid degradation takes place with the development of corrosive phenomena. Respectively, Auyeung [19] stated that on reinforced concrete specimens without stirrups, the corrosive factor dramatically affects bonding, since only 2% of the cross-sectional loss of the reinforcement bar can lead to up to 80% reduction in bond strength. The significant contribution of transverse reinforcement (stirrups) to the bond's maintenance of corroded reinforced concrete elements is also highlighted in detail by Lundgren [20]. Unobstructed and prolonged environmental action in reinforced concrete elements of structures are common and bring significant corrosion damage in reinforcement steel and extreme bond strength loss, that facilitates the relative slippage between concrete and steel bar, in such a manner that the structural element acts like unreinforced.

Reasons of "health monitoring" of coastal structures, which suffer from the presence of chloride ions, often push inspectors to relate the service life of structures with that of chloride content in concrete, as it is a generally followed standard practice. Moreover, it is known that the predictive life-time models about the onset of corrosion of reinforced concrete elements, in their majority, require limit value (threshold) chloride content (CTV). Nevertheless, in the existing literature to date, neither has a model been prevailed nor been established (a specific chloride content in concrete) that has been widely verified by the researchers. This is largely related to the inability to accept a certain reliable method of calculating the chloride threshold value, resulting in misinterpretations and different results. The most important specifications related to chloride content in concrete and available in the literature, such as [21–29], superficially reflect the different approach to this issue.

Technical assessments inspection of durability of the load-bearing structure is a very complex process. In reinforced concrete structures where the rebar is not optically accessible, chloride measurements and corrosion damage estimation are of low reliability. Contrary to the above, the occurrence of surface cracking in concrete due to corrosion is visible and measurable, and the crack width is easily quantified. Based on this fact, there is already a tendency of some researchers to link the surface cracks of the concrete, the corrosion damage of steel reinforcement, and the degradation of bonding locally to the surrounding concrete [30–41]. Torres-Acosta et al. [30, 31] investigated the corrosion damage of reinforced beams, assessing pitting geometry and surface crack width, and proposed an empirical relation between rebar radius loss x_{AVER}/r_0 (x_{AVER} is the average corrosion penetration and r_0 the rebar radius) and crack width. Moreover, studies by Andrade et al. [32] and Tahershamsi [33] provide information and correlation results of the surface crack width with the corrosion level and the degradation of the bond strength. Lin et al. [34] indicate in a recent study the significant effect of cover thickness and amount of transverse reinforcement on induced surface cracking and on bond strength between concrete and corroded rebars. Finally, Zhou et al. [35] suggest a parametric model predicting the bond strength loss as a function of surface cracking of the concrete, based on already existing experimental results from the literature.

In the current study, the results of a broad experimental investigation on the correlation of the bond strength with the surface cracking width are discussed and analyzed. The

main input parameters in this correlation are the cover thickness of concrete c, the existence and amount (density) of the stirrups, and the corrosion level of steel reinforcement.

2. Experimental Program

Experimental procedure consisted of two phases. Initially, 48 reinforced concrete specimens were made, the classification of which was based on the cover thickness and the amount of stirrups (the distance between them or their absence). Subsequently, controlled corrosion damage to the steel reinforcement was carried out by accelerated electrocorrosion exposing the specimens to the corrosive environment for 5 different times. Thereafter, the percentage mass loss of the corroded reinforcement was estimated and correlated with the surface cracking width of concrete. Finally, the bond strength between steel reinforcement and concrete of corroded specimens was tested by pull-out tests, which were compared to the corresponding noncorroded reference specimens.

2.1. Materials and Specimens. In this manuscript, a parallel aim is to study structural reinforced concrete elements of existing structures. Hence, concrete C20/25 is chosen, as this category constitutes a representative sample given the fact the majority of structures in many regions in the Mediterranean basin such as Greece, Turkey, and Italy were built up by ignoring or adopting late the incentives of EN206 on the use of concrete strength class C25/30 C30/37 in coastal environment and likewise with the rules about cover thickness. Therefore, the preparation of (prismatic) $240 \times 200 \times 310$ (mm) reinforced concrete specimens, Figure 2, was carried out with C20/25 concrete and 16 mm diameter ribbed B500c steel for the main semiembedded steel reinforcement and 8 mm diameter for stirrups as well as the four reinforcing steel bars placed at the corners. A total of four test cases were examined: (a) specimens without stirrups, (b) specimens with Φ8/240 mm stirrups, (c) specimens with Φ8/120 mm stirrups, and (d) specimens with Φ8/60 mm stirrups. Further, the combination of these with two cases of concrete cover, 25 mm and 40 mm, was also examined. In order to achieve the desired cover thickness of the concrete, specially made steel molds with variable height walls were constructed.

Before mixing the concrete in molds, reinforcing steel bars were carefully cleaned, and their initial mass was documented. Thereafter, all steel bars and stirrups were aligned and fastened to the molds. Compaction of concrete was conducted with the help of table vibrator. The concrete specimens were kept for three days in a room at a temperature of 22°C and continuous wetting. Thereafter, the molds carefully removed, and the specimens were immersed in water for a period of 28 days (curing). For the concrete mixture, a Portland cement was used, with water-cement ratio of 0.55 and 20 mm maximum size coarse aggregate. The 28-day recorded compressive strength of the concrete was measured on 200 mm^3 cubes and with average $f_c = 30$ MPa.

Prior to initiating a series of specific tests, appropriate labeling was carried out which correlated with the specific characteristics of each specimen. The investigation of RC elements' bond behavior was conducted by examining three main parameters, the cover thickness (c) of concrete, the density of transverse reinforcement (stirrups distance), and the exposure to accelerated corrosion time, as shown in Table 1. Each tested specimen had its own label, where the first two digits of the label refer to the cover thickness of concrete (25 or 40 for $c = 25$ mm or $c = 40$ mm), then the letter N refers to the group of test specimens without stirrups, and the element S240 refers to the group of test specimens with stirrups Φ8 per 240 mm, S120 to the group of test specimens with stirrups Φ8 per 120 mm, and S60 to the group of test specimens with stirrups Φ8 per 60 mm. The last digit of each label refers to the electrocorrosion exposure time. Thus, for instance, the 25-S240-3 specimen corresponds to a specimen with cover thickness 25 mm, with stirrups Φ8 per 240 mm, and to the third (in a row) corrosion time.

2.2. Accelerated Corrosion Technique. The occurrence of corrosion phenomena in the reinforced concrete elements in the real natural environment takes place slowly over a period of more than 20 years. In order to study the effect of different intensities of corrosion phenomena on bond strength, experimental tests of accelerated corrosion on reinforced concrete specimens (which had previously been properly maintained for 30 days after their concreting) were carried out by the anodic corrosion method. A power supply is used to induce the corrosion by applying direct electric current to semiembedded reinforcing steel bar, which acted as anode. The specimens were fully immersed in electrocorrosion cells filled with 5% sodium chloride (NaCl) solution by weight of water, in the presence of a stainless-steel bar (cathode of the circuit), which was positioned in the same direction as the semiembedded steel bar. Solution 5% NaCl was selected because it simulates a severe corrosive environment or a coastal environment [42, 43] and comes in agreement with existing regulations concerning corrosion tests, such as the B117 ASTM Standard. Additionally, the content of the solution in NaCl represents accurately the case of the Mediterranean countries, where hot climate results in higher salinity of the seawater, in contrast to northern countries, where river estuaries can be met. A typical example is the Arabian basin, where the salinity measured is even higher. Furthermore, at the Mediterranean countries, salinity of the sea increases during the summer periods, given the high temperatures recorded [1, 44]. In order to achieve different corrosion damage levels, the reinforced concrete specimens remained in the cells for different times, inducing current density of 0.5 mA/cm^2 via the power supply externally and continuously (Figure 3(a)).

The induced corrosion was limited to a 250 mm section of the semiembedded reinforcing steel bar, the rest of which was protected with a wax layer. Correspondingly, the stirrups were exposed to electrocorrosion along the upper part of the specimens on the side of the main reinforcing bar by 80 mm from the concrete surface. The remaining area of stirrups legs and the other 4 auxiliary corner bars Φ8 were

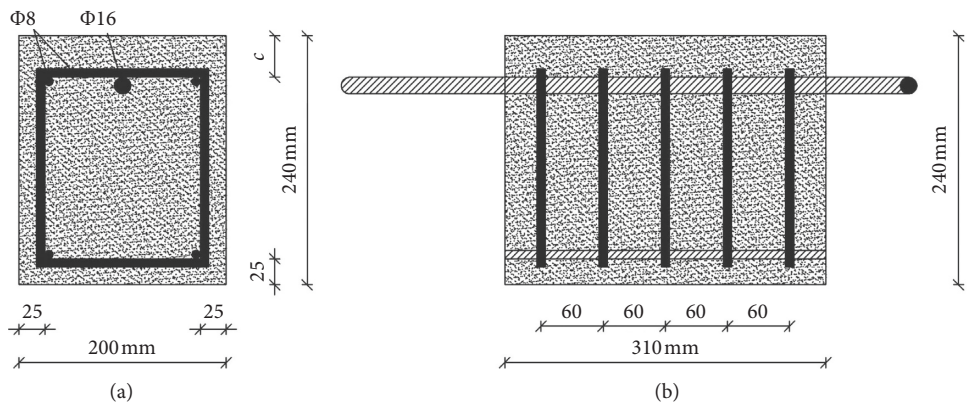

Figure 2: (a) Typical cross-sectional view (cover thickness, c); (b) typical longitudinal view (stirrups Φ8/60 mm).

Table 1: Tested parameters of RC elements' bond behavior (cover thickness, transverse reinforcement (stirrups), and electrocorrosion time).

	Tested parameters	
Cover thickness, c	Transverse reinforcement (stirrups)	Exposure time
		Noncorroded 0
	No stirrups (N)	Corrosion time 1
$c = 25$ mm	Stirrups Φ8/240 mm (S240)	Corrosion time 2
c = 40 mm	Stirrups Φ8/120 mm (S120)	Corrosion time 3
	Stirrups Φ8/60 mm (S60)	Corrosion time 4
		Corrosion time 5

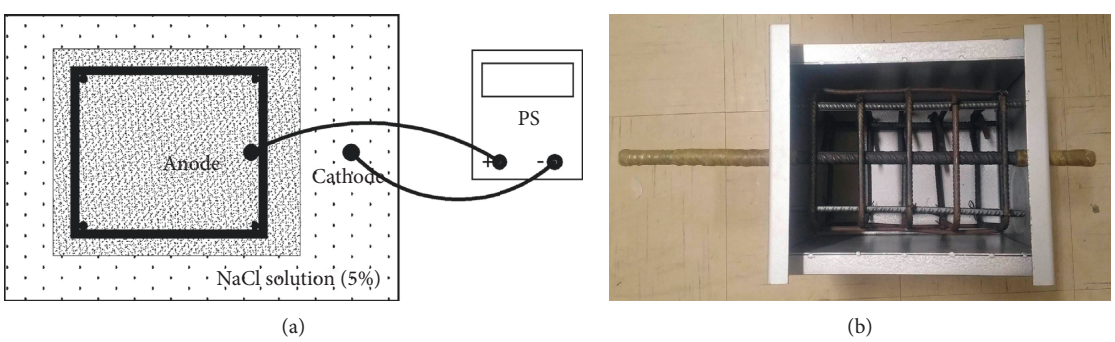

Figure 3: (a) Simplified procedure of accelerated electrocorrosion. (b) Metal mold of steel reinforcement before casting.

suitably protected with a special anticorrosive coating (epoxy resin) (Figure 3(b)).

2.3. Concrete Cracks Mapping. The cracks that appeared on the concrete surface, after specimen removal from the electrocorrosion cells, were recorded, mainly on the upper side of the specimens where the main reinforcing steel bar Φ16 and the unprotected legs of the stirrups were placed. The average width of surface concrete's cracking was mapped, measured, and calculated for each specimen (Figure 4). Surface cracks in a clear direction parallel to the longitudinal and transverse reinforcement were measured along per 5 mm in distinct segments of 20 mm to 50 mm in length, namely, crack width measurements were taken per 5 mm for each individual crack length. From these discrete measurements, the average crack width in each reinforced concrete specimen for each corrosion level was finally calculated.

2.4. Pull-Out Tests. A series of mechanical pull-out tests, based on ASTM C234-91a [45], were performed before and after corrosion, in order to determine the change in bond strength for each corrosion level.

For this purpose, an apparatus was designed (Figure 5(a)), which allows the direct transfer of the applied force from the steel bar to concrete. The mechanical tests were carried out on a general-purpose servomotor MTS ($P_{max} = 250$ kN), where its own fitting and the tested reinforced concrete sample were properly fitted (Figure 5(b)).

Figure 4: Occurrence of surface concrete cracking (parallel to the axis of main steel bar) due to corrosion.

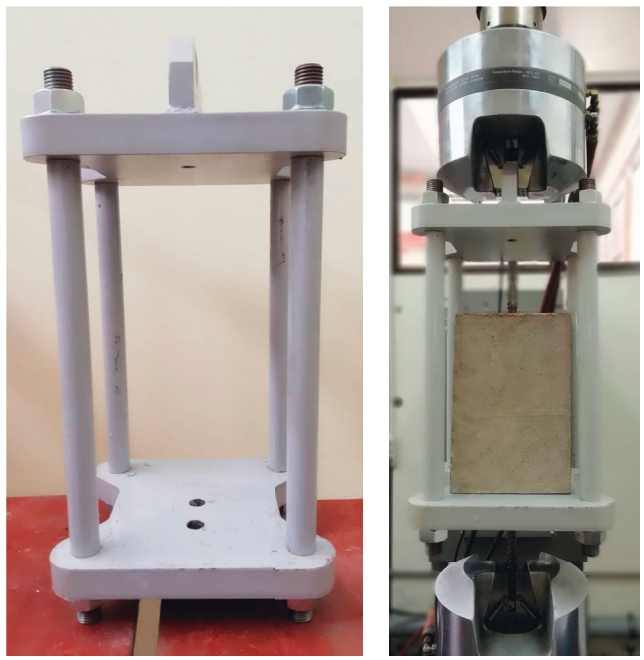

(a) (b)

Figure 5: (a) Special apparatus which transfers the force from steel bar to concrete. (b) Experimental pull-out test.

The calculation of the bond strength of reference specimens and corroded specimens was recorded taking the nominal diameter of the reinforcement bar into account. The average bond strength between steel and concrete c_b for the embedded length was expressed by equation (1), as shown in Figure 6:

$$c_b = \frac{F_{max}}{\pi \cdot D \cdot L}, \quad (1)$$

where F_{max} is the maximum pull-out force, $D = 16$ mm the nominal diameter of the main reinforcing bar, and $L = 250$ mm the embedded length. Table 1 shows the calculated values of bond strength loss for all specimens.

3. Experimental Results and Predictive Model of Strength Loss

3.1. Results of Electrocorrosion and Pull-Out Tests. The results of the experimental work are summarized in Table 2. In particular, the percentage mass loss of the main steel reinforcement, the calculated average surface cracking width of concrete, and the bond loss between corroded reinforcement and concrete relative to the corresponding reference (noncorroded) specimens for each corrosion level are presented. The bond loss ratio c_b^{cor}/c_b^{uncor} refers to proper normalization of the loss of bond force between corroded reinforcement and concrete and subsequently the reduction of load carrying capacity of reinforced concrete element.

After the measurement of crack width at discrete points of each surface crack and the calculation of the mean cracking width of each specimen as well as the mass loss of steel reinforcement, Figures 7 and 8 were created, where the average crack width and percentage mass loss were correlated in both cases of 25 mm and 40 mm concrete cover thickness.

Furthermore, average crack width and bond strength loss were correlated after the conduction of pull-out tests on corroded specimens. The results of this investigation are presented in Figures 9 and 10.

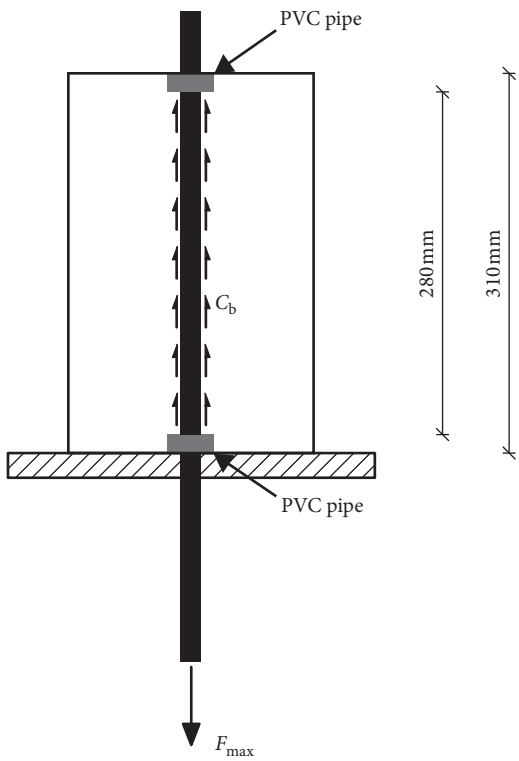

Figure 6: Calculation of mean bond strength between steel and concrete (pull-out test).

3.2. Predictive Models of Bond Strength. In this study, two different predictive models of bond strength loss due to corrosion of steel reinforcement were presented, based on the correlation of bond strength loss of corroded specimens and surface cracking of concrete. An allometric equation is proposed for the first predictive model (Figure 11), whereas an exponential equation is proposed for the second predictive model (Figure 12). These predictive models were obtained by nonlinear regression analysis, based on the experimental results of the pull-out tests, and were defined in the range of 0.20 mm–1.6 mm average concrete cracking width for the allometric model and of 0 mm–1.6 mm average concrete cracking width for the exponential model, corresponding to a percentage mass loss of reinforcing steel bar from 0% to 9%. In the range of 0 mm–0.20 mm cracking width, the allometric function gives values of bond strength ratio greater than 1, which means there is not bond strength loss at this area. Moreover, in the literature, an increase in bond capacity of RC elements is noticed at the initiation of corrosion phenomenon and subsequently in concrete cracking due to the volume increase of iron oxides which affects the increase of initial stiffness in the bond-slip behavior [9, 16, 19, 20, 36, 46]. Hence, the allometric model (Function 1) can be proposed to predict the bond strength loss after the occurrence of 0.2 mm cracking width. It is remarkable to note once again that the prediction of bond strength of RC specimens, in the present manuscript, is correlated only with surface cracks of concrete due to corrosion phenomenon.

The functions of both predictive models are as follows:

Table 2: Experimental results (mass loss of steel reinforcement, average crack width of concrete, and bond strength loss).

Specimen	Mass loss (%)	Average crack width (mm)	Bond loss ratio (MPa)
25-N-0	0	0	1
25-N-1	0.97	0.20	0.88
25-N-2	2.05	0.35	0.62
25-N-3	4.12	0.55	0.41
25-N-4	5.83	0.95	0.19
25-N-5	7.73	1.45	0.15
25-S240-0	0	0	1
25-S240-1	1.03	0.35	0.77
25-S240-2	2.22	0.55	0.60
25-S240-3	4.38	0.85	0.51
25-S240-4	5.74	1.05	0.48
25-S240-5	8.47	1.45	0.40
25-S120-0	0	0	1
25-S120-1	1.17	0.35	0.95
25-S10-2	3.22	0.70	0.82
25-S120-3	5.84	1.20	0.71
25-S120-4	7.06	1.10	0.50
25-S120-5	8.32	1.40	0.68
25-S60-0	0	0	1
25-S60-1	0.85	0.20	1.10
25-S60-2	1.72	0.55	1.02
25-S60-3	2.96	0.65	0.92
25-S60-4	5.82	0.90	0.90
25-S60-5	8.68	1.00	0.82
25-N-0	0	0	1
40-N-1	0.52	0.20	0.78
40-N-2	2.36	0.55	0.45
40-N-3	5.12	1.00	0.25
40-N-4	7.81	1.20	0.32
40-N-5	8.26	1.45	0.15
40-S240-0	0	0	1
40-S240-1	1.04	0.30	0.92
40-S240-2	2.24	0.90	0.53
40-S240-3	4.10	1.40	0.40
40-S240-4	5.77	1.50	0.27
40-S240-5	8.81	1.60	0.28
40-S120-0	0	0	1
40-S120-1	2.06	0.30	0.96
40-S240-2	3.14	0.65	0.83
40-S120-3	5.02	1.15	0.51
40-S120-4	6.44	1.45	0.43
40-S120-5	8.76	1.50	0.47
40-S60-0	0	0	1
40-S60-1	0.96	0.25	0.98
40-S60-2	2.86	0.60	0.87
40-S60-3	3.82	0.85	0.85
40-S60-4	6.46	0.90	0.82
40-S60-5	7.96	1.00	0.68

$$\frac{c_b^{cor}}{c_b^{uncor}} = \alpha \cdot c_w^{\beta}, \quad \text{allometric equation (Function 1)},$$
$$\frac{c_b^{cor}}{c_b^{uncor}} = e^{-A \cdot c_w}, \quad \text{exponential equation (Function 2)}, \tag{2}$$

where α, β, and A are parameters that depend on the concrete cover and the amount of transverse reinforcement (distance between stirrups or absence of stirrups). Tables 3 and 4 show the values of parameters for each predictive

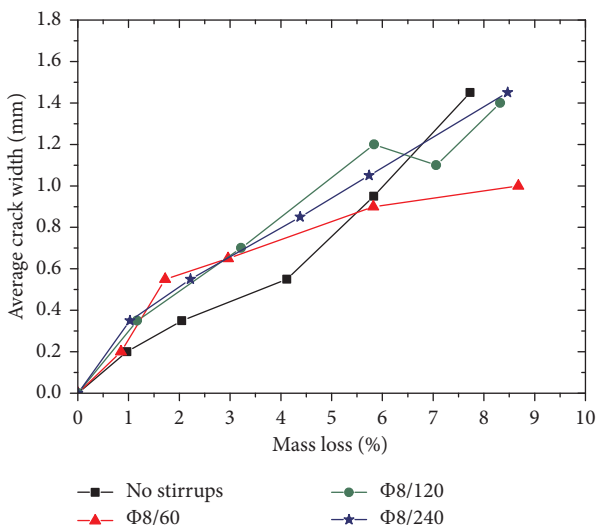

Figure 7: Correlation of average crack width on concrete surface and of percentage mass loss of steel bar (cover thickness 25 mm).

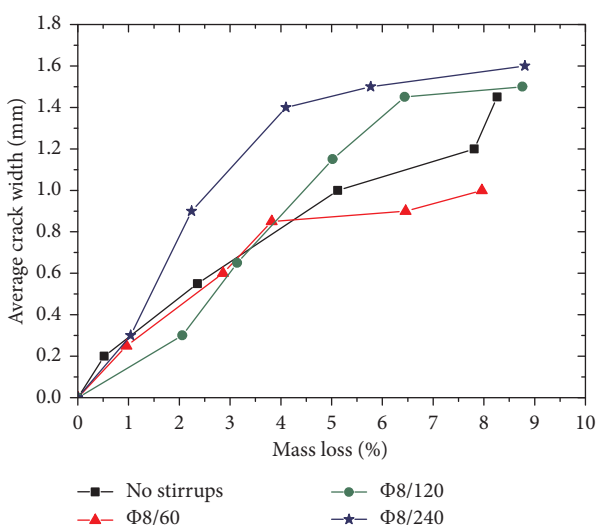

Figure 8: Correlation of average crack width on concrete surface and of percentage mass loss of steel bar (cover thickness 40 mm).

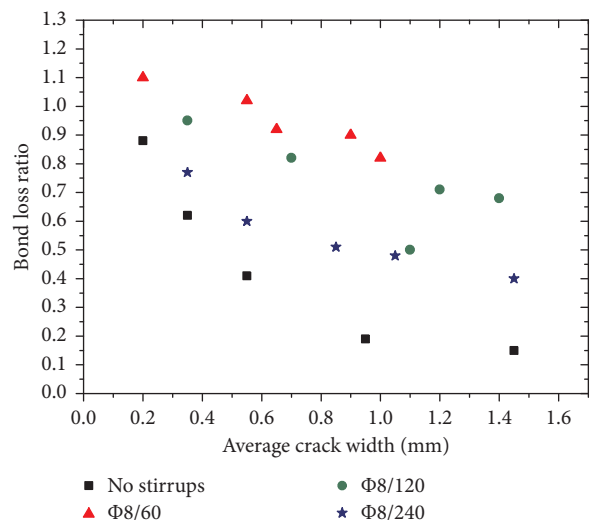

Figure 9: Correlation of bond strength loss and average crack width (cover thickness 25 mm).

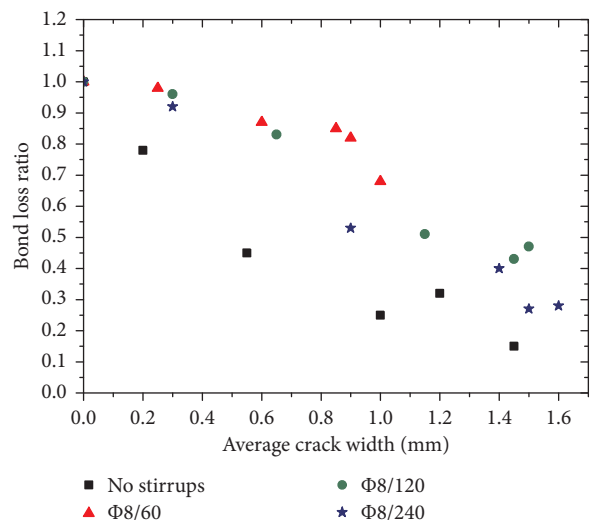

Figure 10: Correlation of bond strength loss and average crack width (cover thickness 40 mm).

model (depending on the case of cover thickness and the presence of stirrups), as they were derived from the regression analysis, as well as the corresponding values of the R^2 coefficient.

4. Discussion

All 48 specimens did not exhibit any surface cracking after their concreting and 28 days of maintenance. Thus, the recorded surface crack widths were solely due to corrosion of steel reinforcement. The loss of passive steel protection resulted in rapid corrosion and thereby in linear development of various range cracking of concrete along the steel bars. Diagrams of correlation between percentage mass loss of steel bar and surface cracking of concrete depicted the following.

The group of specimens with concrete cover thickness equal to 25 mm (Figure 7), up to a mass loss percentage of 3%, showed a common range of surface cracking for those specimens with stirrups. Despite the fact that initially the specimens with stirrups Φ8/60 mm recorded higher ranges of cracking—justified by the high percentage of steel—subsequently these specimens clearly demonstrated development constraints of surface cracking. In contrast, specimens without stirrups originally showed low-range cracking as a result of low percentage of steel. Following that, the highest growth rate of average cracking is observed, hardly surprising due to concrete embedding absence of specimens.

In the group of specimens with concrete cover thickness equal to 40 mm (Figure 8), those with stirrups Φ8/60 mm and Φ8/120 mm and those without stirrups, for a mass loss percentage of 3%, showed approximately common range of

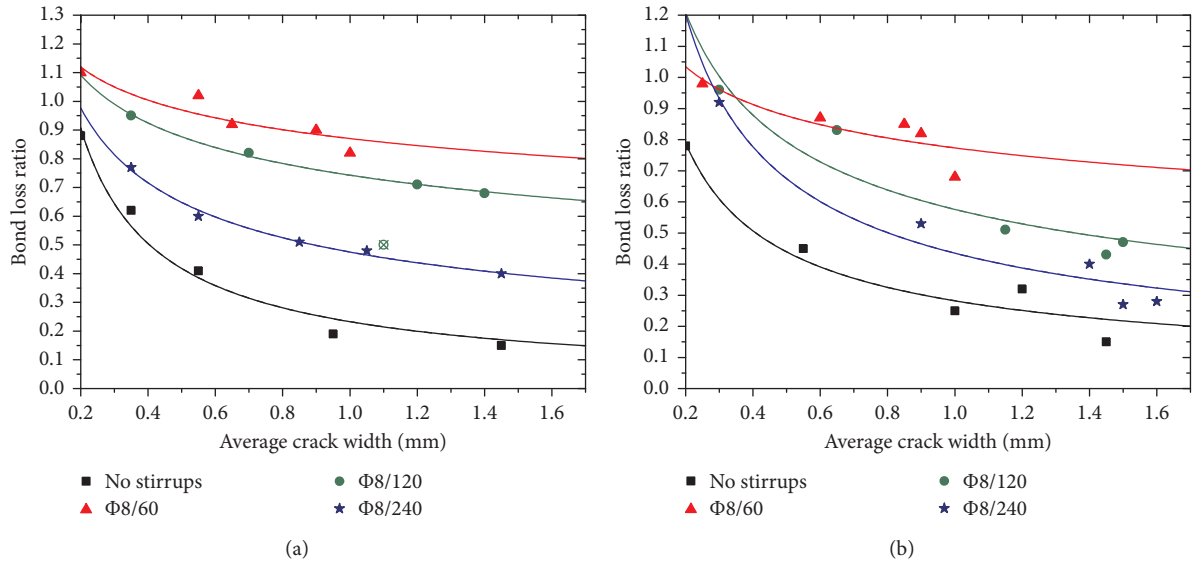

Figure 11: Allometric predictive model of bond loss as a function of average crack width, cover 25 mm (a) and cover 40 mm (b).

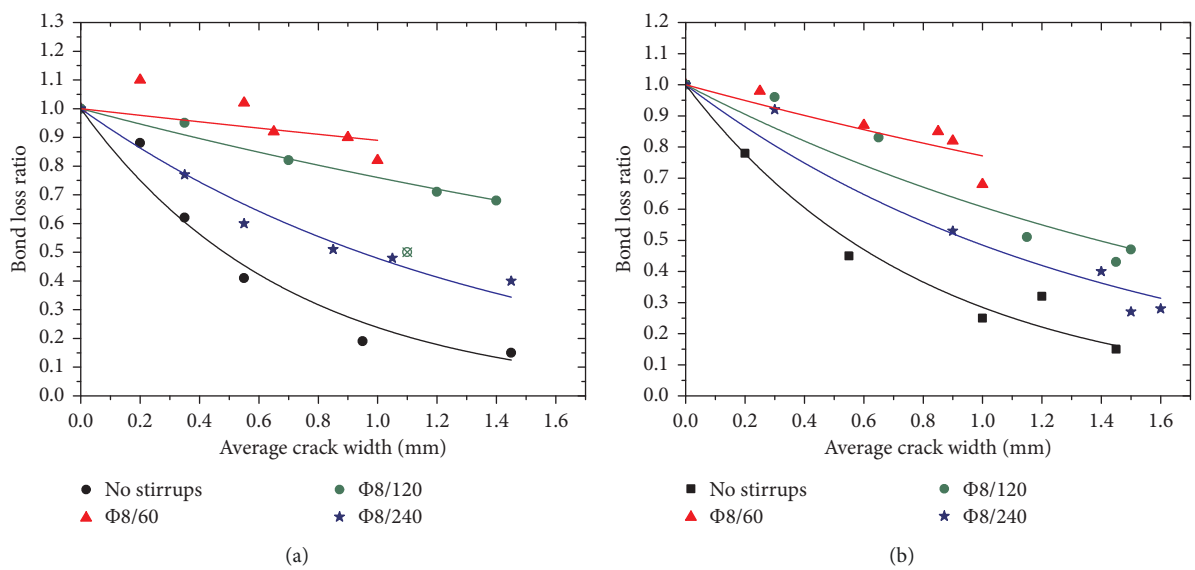

Figure 12: Exponential predictive model of bond loss as a function of average crack width, cover 25 mm (a) and cover 40 mm (b).

Table 3: Parameters by regression analysis for the allometric predictive model.

	Cover 25 mm				Cover 40 mm			
	No stirrups	Φ8/240	Φ8/120	Φ8/60	No stirrups	Φ8/240	Φ8/120	Φ8/60
α	0.233	0.475	0.743	0.870	0.282	0.435	0.576	0.773
β	−0.845	−0.448	−0.239	−0.156	−0.640	−0.633	−0.461	−0.181
R^2 (%)	97.3	98.7	99.4	79.3	93.0	94.0	87.1	62.1

Table 4: Parameters by regression analysis for the exponential predictive model.

	Cover 25 mm				Cover 40 mm			
	No stirrups	Φ8/240	Φ8/120	Φ8/60	No stirrups	Φ8/240	Φ8/120	Φ8/60
A	1.435	0.736	0.274	0.117	1.257	0.724	0.499	0.260
R^2 (%)	96.2	96.5	97.7	45.9	97.5	96.0	91.9	80.1

surface cracking. The specimens with stirrups Φ8/240 mm recorded rapidly significant high range of cracking. In this specimens' group with concrete cover of 40 mm, the confined cross section is smaller contrary to the group with concrete cover of 25 mm. Thus, the poor confinement in conjunction with the initiation of corrosion affects the (uncontrolled) impetuous propagation of surface cracking.

However, as corrosion increases, specimens with stirrups Φ8/60 mm recorded a remarkable curtailment of surface cracking development. The remarkable differentiation of specimens with stirrups Φ8/60 mm has been (about) equivalently observed for both groups, the one with concrete cover thickness of 25 mm and the one of 40 mm; since for mass loss percentage between 8.5% and 9%, an average range of cracking of only 1 mm has been recorded.

In addition, observing the bond loss drop of corroded specimens, Figures 9 and 10 depict that the change of bond strength between concrete and steel bar is in line with range cracking increase, following a rapid deterioration, which is more specified as follows:

In both groups of steel specimens, concrete cover thickness of 25 mm and 40 mm (Figures 9 and 10), is confirmed that the increase of the average range of surface cracking brought a dramatic decrease of bond strength between concrete and steel bar.

In the same groups of specimens, it is obvious form Figures 9 and 10 that densification of stirrups considerably slows down the bond loss. More specific, in specimens with concrete cover thickness of 25 mm and in the presence of stirrups Φ8/60 mm, the bond strength performance, although initially increased, up to an average range of cracking equal to 0.60 mm remained stable just as in noncorroded specimens. In the same range of cracking, all other groups of specimens recorded reduced bond strength performance by 57%, 35%, and 15%, percentages corresponding to specimens without stirrups, those in the presence of stirrups Φ8/240 mm, and those with stirrups Φ8/120 mm, respectively.

Between the two groups of specimens regarding the concrete cover thickness, the change of bond strength recorded in the first group (cover thickness equal to 25 mm) was clearly foreseeable than the second one.

The rare fitting of stirrups by 240 mm (group of specimens with cover thickness of 25 mm) does not seem to affect bond strength performance at percentages less than 40%, contrary to the absence of stirrups (Figure 9), where for a range of 1.45 mm, bond strength performance reaches a percentage of 16-17%. The abovementioned results transposed to former practices, where in the existing building stock, the use of stirrups refers as four pieces per linear meter, i.e., Φ8/250 mm. Herein, the strong loss of bond strength between concrete and steel bar seems to be inevitable.

In the case of cover thickness of 40 mm (Figure 10), the absence of stirrups deteriorates rapidly bond strength contrary to the dense fitting of stirrups (Φ8/60 mm) where this benefits, thereby delaying bond strength degradation.

Between the two groups of specimens, those with stirrups Φ8/60 mm and Φ8/120 mm, a rapid degradation of bond strength occurs in specimens with cover thickness of 40 mm against compared to those with cover thickness of 25 mm. There is a significant reason for this behavior; given the same total dimensions of specimens, on one hand, the concrete cover of 40 mm is associated with smaller effective cross section and on the other hand, in case of thicker concrete cover, more extensive damage occurs due to the inner development of oxide in concrete on grounds of corrosion of steel reinforcement. Specimens with stirrups per 240 mm for both groups of cover thickness do not show signs of same behavior. A possible explanation of this differentiation could be synergy of various factors such as the scale of specimen and the incurred reduced corrosion damage of sparse stirrups.

The bond strength between concrete and steel shows obviously a significant decrease by increasing the range of surface cracking of concrete. Both Figures 9 and 10 depict that a reduction of threshold is observed as the range of surface cracking increases. The results are in a good agreement with results of former studies, such as Lin et al. [34], Almusallam et al. [36], Rodriguez et al. [37], and Fischer and Ožbolt [38].

The knowledge of bond strength between concrete and steel bar is a very important aspect in the mechanical behavior of RC structures, both in new structures' design and in the assessment of existing ones. In the existing literature, there are various predictive models of bond strength loss of corroded RC specimens that provide linear or exponential bond loss [46–51]. A model of linear decrease of bond strength loss on the basis of the corrosion level of steel reinforcement is proposed by Cabrera [46], based on pull-out tests in a semiembedded steel bar of Φ12 nominal diameter at the center of a cubic specimen of 150 mm edge. Yalciner et. al. [47] proposed a model of exponential bond strength loss by reference not only to the corrosion level, but also to the compressive strength of concrete f_c as well as to the ratio of concrete cover thickness to nominal diameter of the steel bar c/D. Lin and Zhao [48] also proposed an exponential bond strength loss model, examining the thickness of concrete cover, the current of corrosion, and the distance between the stirrups. From the aforementioned, it becomes obvious that the proposed prediction models, in their vast majority, associate the degradation of bond strength with the corrosion level of steel reinforcement.

Thus, the evaluation of corrosion level of existing structures is a really complicated issue. Steel reinforcement is rarely visible or accessible, and the corrosion damage is uneven along the steel bars. The evaluation of corrosion damage of steel bars in experimental studies is calculated through mass loss of random length's part. Hence, the measured mass loss has no local characteristics at the position of maximum loss of the cross-sectional area, but an average uniform mass loss along the steel bar. Against this background, it becomes obvious that a more suitable technique of correlation between damage corrosion and degradation of bond strength concrete steel should be adopted. As it is well known, surface cracks indicate the presence of corrosion of steel reinforcement. Fischer and Ožbolt [38] point out the particular importance of recording and measuring surface cracks' width, as an indicator of bond strength evaluation.

Table 5: Review parameters of bond strength loss from existing studies and present experimental study.

Study	Test	f_c (MPa)	Steel bar diameter (mm)	Cover (mm)	Stirrups
Almusallam et al. [36]	Pull-out	30	12	63.5	No
Rodriguez et al. [37]	Beam end	40	16	24	Φ8/100
Zandi and Coronelli [39]	Beam end	34–38	20	30	Φ8/48
Fischer and Ožbolt [38]	Beam end	41	12, 1 6	20, 35	No
Zhao et al. [40]	Pull-out/Beam end	41.9	18	66	No/Φ8/100
Tahershamsi et al. [33]	Beam end	37–49	2 × 16 (bundled)	30–70	Φ8/300
					Φ8/60
Present study	*Pull-out*	**30**	**16**	**25, 40**	**Φ8/120**
					Φ8/240

Referring to the literature, it emerged that studies associating bond strength loss with crack width are limited. In contrast, as correlation indexes are sometimes determined the corrosion level of steel bar and sometimes the depth of chlorides' penetration and their percentage concentration. Tahershamsi et al. [33], Almusallam et al. [36], Rodriguez et al. [37], Fischer and Ožbolt [38], Zandi and Coronelli [39], and Zhao et al. [40] investigated the degradation of bond strength in relation to the surface crack width by carrying out pull-out or beam end experiments.

Given this tendency to approach the issue of bond strength between concrete and steel, the developing predictive models of the current study linked the bond strength loss of corroded specimens to the average width of concrete surface cracking. As it is demonstrated, the equation of prediction chosen was allometric in the first model and exponential in the second. Even though in literature are met linear predictive models of corrosion ongoing in relation to crack width, such as by Cabrera [46], in the current manuscript, this type of model showed no satisfactory results. Observing the characteristics of bond loss (Figures 9 and 10), it was concluded that curve function, such as equations (1) and (2), is in accordance with the experimental results. As Figures 11 and 12 show, both predictive models remain close to the issue of bond strength loss, followed by large values R^2. After the detailed examination of Figures 11(a) and 11(b), it is clearly demonstrated that the allometric equation is in good agreement with bond loss, after recording microcracks of 0.2 mm, as in smaller crack values, leading to zero, bond strength takes ultrahigh values leading to overestimation. On the other hand, Figures 12(a) and 12(b) show that the exponential equation approaches adequately the phenomenon of bond strength loss. In parallel, this approach reaches an agreement with former researches [36, 37] proposing the exponential bond strength loss as corrosion evolves. Therefore, such a methodology of bond loss assessment begins to emerge and strengthen, not by measuring the content of chlorides, but only by measuring the surface cracking.

In the case of presence of stirrups Φ8/60 mm, in both predictive models, a decrease of factor R^2 prevails. This fact is due to the feebleness of the predictive models' equations to follow the increasing stress of bond strength at the initial corrosion level (up to 2% mass loss).

In this paper, through its efforts to validate and correlate the experimental results with those of the literature, appears that the experimental ones display large dispersion with each other and with those from the literature, due to various parameters such as concrete category, nominal diameter of steel reinforcement, concrete cover thickness, presence or absence of stirrups. As shown in Table 5, it is noteworthy that despite the differences of tested parameters referential in all comparative studies in the experimental literature, exponential models are proposed on the prediction of bond behavior of corroded RC elements in recent researches.

Even though mass loss of steel reinforcement due to corrosion about 8-9% and corresponding cracks up to 1.4 mm–1.6 mm displayed dramatic decrease of bond strength, often the encountered surface crack widths in existing structures present larger values. From this point of view, the present session will expand with further running experiments, so as to extend to wider cracks.

5. Conclusions

In the present study, an extensive experimental study was conducted on reinforced concrete elements, where the corrosion damage of the steel reinforcement was correlated with the average crack width on surface of concrete and the bond strength loss between steel and concrete. From this investigation, the following outcomes were obtained:

(i) The corrosion damage of steel reinforcement causes surface cracking width on concrete, which is closely related both to the existence and amount of stirrups and to the cover thickness of concrete.

(ii) The use of dense stirrups Φ8/60 mm, in the case of cover thickness $c = 25$ mm, increases the bond strength between steel and concrete in the initial corrosion stages of up to 1.5%–2% relative to the reference specimens.

(iii) The development of surface cracking in concrete with an average width up to 1.60 mm is associated with an exponential reduction of bonding forces steel reinforcement concrete.

(iv) In both cases of concrete cover (25 mm and 40 mm), the presence of dense connectors, Φ8/60 mm, was accompanied by a clear limitation of the surface cracking development up to 0.90 mm of width, corresponding to an average mass loss of about 8.5%–9%.

(v) The densification of stirrups (through the confinement) contributes positively to maintaining bond between steel reinforcement and concrete.

(vi) Prediction of bond loss was made by an allometric and exponential function. Predictive results through the exponential function were found to be in good agreement with the approximation of contemporary corresponding studies in the literature.

Data Availability

No data were used to support this study.

Conflicts of Interest

The authors declare that they have no conflicts of interest.

References

[1] B. Valdez, J. Ramirez, A. Eliezer, M. Schorr, R. Ramos, and R. Salinas, "Corrosion assessment of infrastructure assets in coastal seas," *Journal of Marine Engineering & Technology*, vol. 15, no. 3, pp. 124–134, 2016.

[2] G. Koch, J. Varney, N. Thompson et al., *International Measures of Prevention, Application, and Economics of Corrosion Technologies Study*, NACE International, Houston, TX, USA, 2016.

[3] B. Hou, X. Li, X. Ma et al., "The cost of corrosion in China," *npj Materials Degradation*, vol. 1, no. 1, pp. 1–10, 2017.

[4] Y. Liu and R. E. Weyers, "Modeling the time-to-corrosion cracking in chloride contaminated reinforced concrete structures," *ACI Materials Journal*, vol. 95, no. 6, pp. 675–681, 1998.

[5] C. A. Apostolopoulos and M. P. Papadopoulos, "Tensile and low cycle fatigue behavior of corroded reinforcing steel bars S400," *Construction and Building Materials*, vol. 21, no. 4, pp. 855–864, 2007.

[6] C. A. Apostolopoulos, S. Demis, and V. G. Papadakis, "Chloride-induced corrosion of steel reinforcement - mechanical performance and pit depth analysis," *Construction and Building Materials*, vol. 38, pp. 139–146, 2013.

[7] C. Apostolopoulos, G. Diamantogiannis, and A. Apostolopoulos, "Assessment of the mechanical behavior in dual-phase steel $B400_C$, $B450_C$ and $B500_B$ in a marine environment," *Journal of Materials in Civil Engineering*, vol. 28, no. 2, article 04015097, 2016.

[8] C. A. Apostolopoulos and V. G. Papadakis, "Consequences of steel corrosion on the ductility properties of reinforcement bar," *Construction and Building Materials*, vol. 22, no. 12, pp. 2316–2324, 2008.

[9] A. Elbusaefi, *The effect of steel bar corrosion on the bond strength of concrete manufactured with cement replacement materials*, Ph.D. thesis, School of Engineering, Cardiff University, Cardiff, Wales, 2014.

[10] EN-1992-1-1, *Eurocode 2–Design of Concrete Structures. Part 1–1: General Rules and Rules for Buildings*, Comité Européen de Normalisation (CEN), Brussels, Belgium, 2008.

[11] X. Fu and D. D. L. Chung, "Effect of corrosion on the bond between concrete and steel rebar," *Cement and Concrete Research*, vol. 27, no. 12, pp. 1811–1815, 1997.

[12] K. Stanish, "Corrosion effects on bond strength in reinforcement in concrete," M.Sc. thesis, Department of Civil Engineering, University of Toronto, Toronto, Canada, 1997.

[13] ACI 408R-03, *Bond and Development of Straight Reinforcing Bars in Tension*, ACI, Farmington Hills, MI, USA, 2012.

[14] S. Tastani and S. Pantazopoulou, "Direct tension pullout bond test: experimental results," *Journal of Structural Engineering*, vol. 136, no. 6, pp. 731–743, 2009.

[15] P. Desnerck, J. M. Lees, and C. T. Morley, "Bond behaviour of reinforcing bars in cracked concrete," *Construction and Building Materials*, vol. 94, pp. 126–136, 2015.

[16] C. Fang, K. Lundgren, L. Chen, and C. Zhu, "Corrosion influence on bond in reinforced concrete," *Cement and Concrete Research*, vol. 34, no. 11, pp. 2159–2167, 2004.

[17] C. Q. Li and J. J. Zheng, "Propagation of reinforcement corrosion in concrete and its effects on structural deterioration," *Magazine of Concrete Research*, vol. 57, no. 5, pp. 261–271, 2005.

[18] M. Maslehuddin, I. Allam, G. Al-Sulaimani, A. Al-Mana, and S. Abduljauwad, "Effect of rusting of reinforcing steel on its mechanical properties and bond with concrete," *ACI Materials Journal*, vol. 87, no. 5, pp. 496–502, 1990.

[19] Y. Auyeung, *Bond properties of corroded reinforcement with and without confinement*, Ph.D. thesis, New Brunswick Rutgers, The State University of New Jersey, Newark, NJ, USA, 2001.

[20] K. Lundgren, "Effect of corrosion on the bond between steel and concrete: an overview," *Magazine of Concrete Research*, vol. 59, no. 6, pp. 447–461, 2007.

[21] ACI 318M-14, *Building Code Requirements for Structural Concrete*, ACI, Farmington Hills, MI, USA, 2014.

[22] ACI 201.2R-01, *Guide to durable concrete*, American Concrete Institute, Farmington Hills, MI, USA, 2001.

[23] AS 1379, *Specification and Supply of Concrete*, Australian Standard, Sydney, Australia, 2007.

[24] CSA, CSA A23.1-09/A23.2-09, *Concrete Materials and Methods of Concrete Constr./Test Methods and Standard Practices for Concrete*, CSA Group, Ontario, Canada, 2009.

[25] ASTM C1202, *Standard Test Method for Electrical Indication of Concrete's Ability to Resist Chloride Ion Penetration*, American Society for Testing and Materials, West Conshohocken, PA, USA, 2012.

[26] BS EN 206, *Concrete-Specification Performance Production and Conformity*, British Standards Institution, London, UK, 2013.

[27] Bureau of Indian Standard (BIS), *Plain and Reinforced Concrete-Code of Practice, IS 456*, Bureau of Indian Standard, New Delhi, India, 4th edition, 2000.

[28] BS 8110, *Structural Use of Concrete-Part 1: Code of Practice for Design and Construction*, British Standards Institution, London, UK, 1997.

[29] NZS 3101-Part 1, *Concrete Structures Standard, Part 1-The Design of Concrete Structures*, NZS, Wellington, New Zealand, 2006.

[30] A. A. Torres-Acosta, S. Navarro-Gutierrez, and J. Teran-Guillen, "Residual flexure capacity of corroded reinforced concrete beams," *Engineering Structures*, vol. 29, no. 6, pp. 1145–1152, 2007.

[31] A. A. Torres-Acosta and M. Martínez-Madrid, "Residual life of corroding reinforced concrete structures in marine environment," *Journal of Materials in Civil Engineering*, vol. 15, no. 4, pp. 344–353, 2003.

[32] C. Andrade, A. Cesetti, G. Mancini, and F. Tondolo, "Estimating corrosion attack in reinforced concrete by means of crack opening," *Structural Concrete*, vol. 17, no. 4, pp. 533–540, 2016.

[33] M. Tahershamsi, I. Fernandez, K. Lundgren, and K. Zandi, "Investigating correlations between crack width, corrosion level and anchorage capacity," *Structure and Infrastructure Engineering*, vol. 13, no. 10, pp. 1294–1307, 2017.

[34] H. Lin, Y. Zhao, J. Ožbolt, and R. Hans-Wolf, "Bond strength evaluation of corroded steel bars via the surface crack width induced by reinforcement corrosion," *Engineering Structures*, vol. 152, pp. 506–522, 2017.

[35] H. J. Zhou, Y. F. Zhou, Y. N. Xu, Z. Y. Lin, and F. Xing, "Regression analysis of bond parameters between corroded rebar and concrete based on reposted test data," *International Journal of Corrosion*, vol. 2018, Article ID 5309243, 18 pages, 2018.

[36] A. Almusallam, A. Al-Gahtani, A. Aziz et al., "Effect of reinforcement corrosion on bond strength," *Construction and Building Materials*, vol. 10, no. 2, pp. 123–129, 1996.

[37] J. Rodriguez, L. M. Ortega, and A. M. Garda, "Assessment of structural elements with corroded reinforcement," in *Proceedings of International Conference Corrosion and Corrosion Protection of Steel in Concrete*, vol. 1, pp. 172–185, University of Sheffield, Sheffield, England, July 1994.

[38] C. Fischer and J. Ožbolt, "An appropriate indicator for bond strength degradation due to reinforcement corrosion," in *Proceedings of the 8th International Conference on Fracture Mechanics of Concrete and Concrete Structures (FraMCoS)*, pp. 1828–1835, Toledo, Spain, March 2013.

[39] K. Zandi and D. Coronelli, "Anchorage capacity of corroded reinforcement: eccentric pull-out tests on beam-end specimens," Report No. 2010-06, Department of Civil and Environmental Engineering, Chalmers University of Technology, Goteborg, Sweden, 2010.

[40] Y. Zhao, H. Lin, K. Wu et al., "Bond behaviour of normal/recycled concrete and corroded steel bars," *Construction and Building Materials*, vol. 48, pp. 348–359, 2013.

[41] C. Fang, K. Lundgren, M. Plos, and K. Gylltoft, "Bond behaviour of corroded reinforcing steel bars in concrete," *Cement and Concrete Research*, vol. 36, no. 10, pp. 1931–1938, 2006.

[42] J. X. Jia, G. Song, and A. Atrens, "Boundary element method predictions of the influence of the electrolyte on the galvanic corrosion of AZ91D coupled to steel," *Materials and Corrosion*, vol. 56, no. 4, pp. 259–270, 2005.

[43] J. X. Jia, A. Atrens, G. Song, and T. H. Muster, "Simulation of galvanic corrosion of magnesium coupled to a steel fastener in NaCl solution," *Materials and Corrosion*, vol. 56, no. 7, pp. 468–474, 2005.

[44] C. Apostolopoulos, A. Drakakaki, and M. Basdeki, "Seismic assessment of a reinforced concrete column under seismic loads," *International Journal of Structural Integrity*, 2018, In press.

[45] ASTM C234-91a, *Standard Test Method for Comparing Concretes on the Basis of the Bond Developed with Reinforcing Steel (Withdrawn 2000)*, ASTM International, West Conshohocken, PA, USA, 1991.

[46] J. G. Cabrera, "Deterioration of concrete due to reinforcement steel corrosion," *Cement and Concrete Composites*, vol. 18, no. 1, pp. 47–59, 1996.

[47] H. Yalciner, O. Eren, and S. Sensoy, "An experimental study on the bond strength between reinforcement bars and concrete as a function of concrete cover, strength and corrosion level," *Cement and Concrete Research*, vol. 42, no. 5, pp. 643–655, 2012.

[48] H. Lin and Y. Zhao, "Effects of confinements on the bond strength between concrete and corroded steel bars," *Construction and Building Materials*, vol. 118, pp. 127–138, 2016.

[49] Y. Auyeung, P. Balaguru, and L. Chung, "Bond behavior of corroded reinforcement bars," *ACI Materials Journal*, vol. 97, no. 2, pp. 214–221, 2000.

[50] H. Lee, T. Noguchi, and F. Tomosawa, "Evaluation of the bond properties between concrete and reinforcement as a function of the degree of reinforcement corrosion," *Cement and Concrete Research*, vol. 32, no. 8, pp. 1313–1318, 2002.

[51] A. Kivell, "Effects of bond deterioration due to corrosion on seismic performance of reinforced concrete structures," Master Thesis, University Canterbury, Christchurch, New Zealand, 2012.