Hindawi
Advances in Civil Engineering
Volume 2019, Article ID 5198583, 7 pages
https://doi.org/10.1155/2019/5198583

Research Article

Prediction of the Strength of Rubberized Concrete by an Evolved Random Forest Model

Yuantian Sun,[1] **Guichen Li**,[1] **Junfei Zhang**,[2] **and Deyu Qian**[1]

[1]*School of Mines, Key Laboratory of Deep Coal Resource Mining, Ministry of Education of China, China University of Mining and Technology, Xuzhou 221116, China*
[2]*Department of Civil, Environmental and Mining Engineering, The University of Western Australia, Perth 6009, Australia*

Correspondence should be addressed to Guichen Li; liguichen@cumt.edu.cn and Junfei Zhang; junfeizhang2010@163.com

Received 8 November 2019; Accepted 5 December 2019; Published 28 December 2019

Guest Editor: Binh Thai Pham

Rubberized concrete (RC) has attracted more attention these years as it is an economical and environmental-friendly construction material. Normally, the uniaxial compressive strength (UCS) of RC needs to be evaluated before application. In this study, an evolutionary random forest model (BRF) combining random forest (RF) and beetle antennae search (BAS) algorithms was proposed, which can be used for establishing the relationship between UCS of RC and its key variables. A total number of 138 cases were collected from the literature to develop and validate the BRF model. The results showed that the BAS can tune the RF effectively, and therefore, the hyperparameters of RF were obtained. The proposed BRF model can accurately predict the UCS of RC with a high correlation coefficient (0.96). Furthermore, the variable importance was determined, and the results showed that the age of RC is the most significant variable, followed by water-cement ratio, fine rubber aggregate, coarse rubber aggregate, and coarse aggregate. This study provides a new method to access the strength of RC and can efficiently guide the design of RC in practice.

1. Introduction

Concrete has been the most widely used construction material in civil engineering, and its demand still increases quickly due to the rapid growth in urbanization and industrialization. Reducing costs and maximizing the strength and durability of concrete are quite challenging issues [1]. Hence, recycled aggregate concrete (RAC) containing some recycling materials, such as plastic materials [2, 3], construction and demolition (C&D) wastes [4, 5], and waste tire rubber [6], has been a hot research area. Given the rapid growth of tire rubber waste and its harmful effect on the environment, using rubber as a substitute in concrete not only contributes to economic growth but also benefits the environment [7]. Considering its ductility and strain behavior, rubber is normally utilized as fine aggregates (FAs) and coarse aggregates (CAs) in concrete, and therefore, the new cementitious composites, namely, rubberized concrete (RC), can be applied in civil engineering.

RC has some special advantages such as reducing CO_2 emissions and decreasing construction costs, and therefore, it attracts many concerns of scholars recently [8–11]. To evaluate the applicability of RC, some mechanical properties including compressive strength and elastic modulus have been studied [12–15]. Moreover, the uniaxial compressive strength (UCS) is the key indicator that has been commonly used for assessing the strength property of RC. Normally, with the increase in the content of rubber in RC, the compressive strength decreases. Some models considering the laboratory tests or compiled databases of previous studies have been proposed to predict the UCS of RC [16–18]. However, due to the limitations of input parameters and the small number of obtained results, these models are not generalizable and not convenient for application. Consequently, systematical investigations are necessary to evaluate the compressive strength of RC by more economic and efficient techniques as per a compressive database including various input parameters.

Nowadays, machine learning methods are considerably used for the prediction of the mechanical properties of cementitious materials [19–21]. The estimation of the mechanical strength of RAC has also been considered. For

example, the multilinear and nonlinear regression models were proposed and used for evaluating the UCS of RAC [22]. The artificial neural network (ANN) methods were applied to assess the strength of RAC [23–25]. Genetic programming (GA) methods were also introduced for nonlinear regression in predicting mechanical properties of RAC [26, 27]. However, to the authors' knowledge, there were no reports of the prediction of RC by artificial intelligence approaches. In addition, though the mentioned machine learning algorithms (ANN, GA, etc.) were used for prediction in concrete, they still had some limitations such as lower efficiency, time-consuming, and indefinite structures. Therefore, more robust and simple machine learning models need to be proposed and utilized in predicting the compressive strength of RC. Nowadays, the random forest (RF) approach has been employed in predicting the mechanical parameters of concrete due to its excellent performance on nonlinear regression and classification [28, 29]. However, no relative studies to date used RF to predict the strength of RC. It should be pointed out that some hyperparameters still need to be optimized to reach its best predictive ability. In this paper, a high-efficiency global optimization algorithm called the beetle antennae search (BAS) algorithm was applied to obtain the best parameters of RF [30].

Therefore, a robust machine learning technique (evolved random forest, namely, BRF) was proposed for the evaluation of the UCS of RC. Several contributions to the literature are as follows:

(1) The random forest (RF) and beetle antennae search (BAS) algorithms were combined to form the BRF model

(2) The strength of rubberized concrete (RC) was, for the first time, predicted and analyzed considering 9 key influencing variables

(3) The variable importance that affected the UCS of RC was first revealed

The proposed method can be a fast tool for estimating the strength of RC and efficiently guide the design and application of RC in practice.

2. Materials and Methods

2.1. Model of Evolved Random Forest (BRF). As mentioned above, the BRF is the combination of RF and BAS, in which the RF was applied to obtain the nonlinear relationship in datasets, while the BAS was used for hyperparameter tuning of RF. In this part, the RF and BAS were introduced as follows.

2.1.1. Random Forest (RF). Random forest is a classification algorithm that employs an ensemble of classification trees, each of which is established by applying a bootstrap sample of the data [31]. For tree building, the variables are selected randomly as the candidate set of variables at each split. The other way is to use bagging which can combine unstable learners successfully. The random forest has outstanding performance in classification tasks such as strong robustness in terms of large feature sets, incorporation of interactions among predictor variables, and high quality and free implementations [32]. The diagram of the structure of RF is shown in Figure 1. This method has been widely used for dealing with the questions of classification and regression in civil engineering.

2.1.2. Beetle Antennae Search (BAS). BAS algorithm is proposed recently, which can be efficiently used for optimizing the global problems and has been used for selecting the optimum parameters of algorithms such as BPNN and SVM [33, 34]. It simulates the behavior of beetles that utilize two antennae to explore nearby areas randomly and turn to a higher concentration of odor. The flowchart of beetle antennae search algorithms is depicted in Figure 2.

2.2. Performance Validation and Evaluation Methods. In this paper, the proposed model was trained and validated on the 70% dataset and tested on the other 30% dataset [21]. During the training and testing processes, all data were split randomly. In addition, the predictive effect on the dataset was assessed by the correlation coefficient (R) and root-mean-square error (RMSE), which were widely used in the previous literature. The relevant equations are as follows:

$$R = \frac{\sum_{i=1}^{N}\left(y_i^* - \overline{y^*}\right)\left(y_i - \overline{y}\right)}{\sqrt{\sum_{i=1}^{N}\left(y_i^* - \overline{y^*}\right)^2}\sqrt{\sum_{i=1}^{N}\left(y^i - \overline{y}\right)^2}},$$
$$\mathrm{RMSE} = \sqrt{\frac{1}{N}\sum_{i=1}^{N}\left(y_i^* - y_i\right)^2}, \tag{1}$$

where N denotes the numbers in the collected dataset; y_i^* and y_i are the expected values and real values, respectively; and $\overline{y}$ and $\overline{y^*}$ indicate the mean predicted values and mean actual values, respectively.

Furthermore, to minimalize the bias, a 10-fold cross-validation method was introduced [35]. Specifically, the samples in the training dataset were divided into 10 subsets. Then one of the 10 subsets was selected for validating the overall performance of the proposed model, while the other 9 subsets were applied to train. This process would be repeated for 10 times.

2.3. Procedures of Hyperparameter Tuning. To obtain the best structure of RF, the hyperparameter tuning is necessary. In this paper, two key parameters (i.e., the number of the trees (tree_num) and the minimum required samples at a leaf node (min_sample_leaf) in RF) were tuned by BAS. By the described 10-folder cross-validation method, the 9 subsets as training sets were used for searching the ideal hyperparameters of RF by BAS for 50 times. The smallest RMSE in terms of the validation set can be chosen after 50 iterations, which represents the best RF model in this fold. Therefore, the best RF model and its corresponding optimum hyperparameters (tree_num and min_sample_leaf) were chosen after 10-folds. The performance of the RF model should be verified by evaluating the test set due to the possibility of

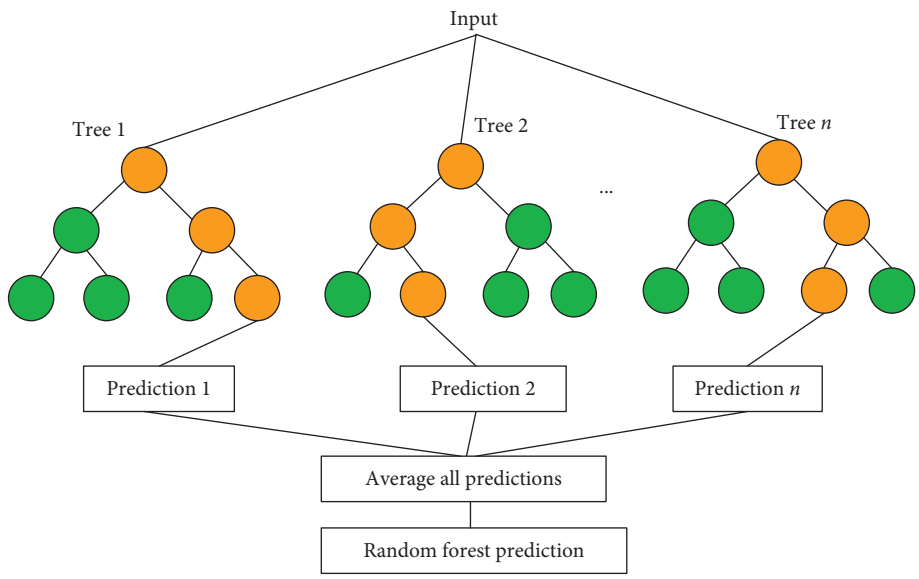

Figure 1: General structure of the RF model.

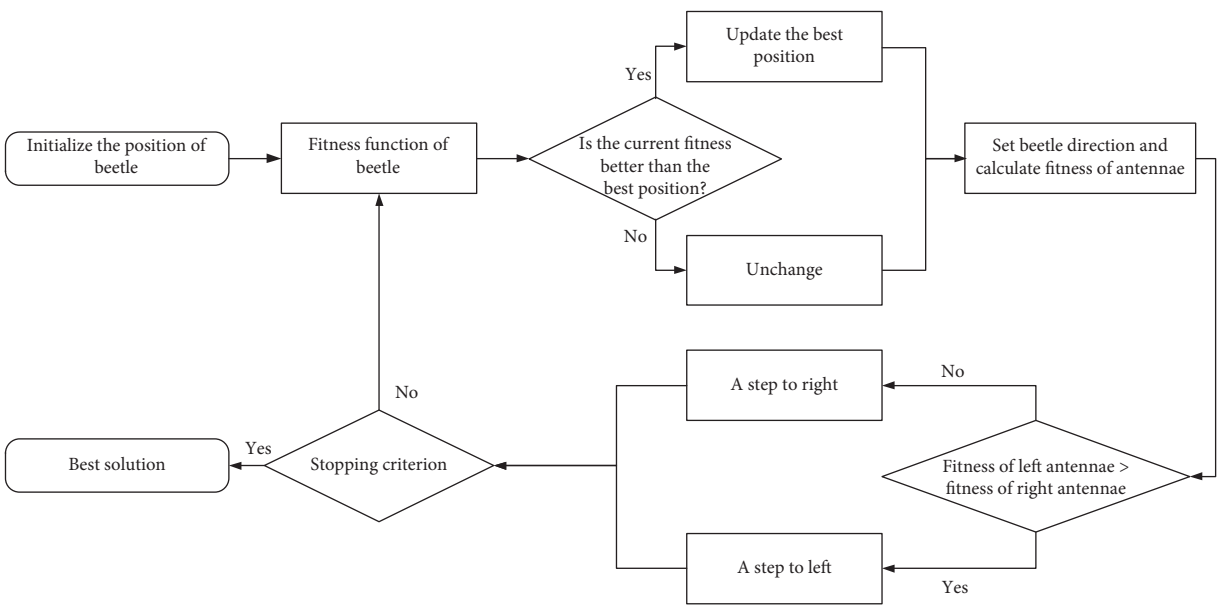

Figure 2: The flowchart of beetle antennae search algorithm.

overfitting problems. The flowchart of hyperparameter tuning of RF by BAS in training and testing is shown in Figure 3.

2.4. Dataset Description. The dataset of RC was collected from the literature [13, 15, 18, 36–38], which was used for establishing and validating the BRF model for strength prediction. A total number of 138 valid samples with 9 key influencing variables were assembled in this study. Generally, depending on the different sizes of rubber, the crumb rubber is used for replacing the fine aggregate (FA) in concrete, while the tire chips are used for replacing coarse aggregate (CA). The compressive strength normally decreased with different rates by replacing various contents of rubber and different rubber types. Therefore, it is necessary to distinguish the rubber into two types in RC, i.e., fine rubber aggregate (FRA) and coarse rubber aggregate (CRA). Moreover, the influencing variables and their description in statistics are given in Table 1. The main objectives are to predict the UCS of RC that is determined by its influencing variables. The relative importance of variables is to be further analyzed. To improve the efficiency of the model, the collected data were normalized into [0, 1]. According to the percentage split of the dataset, 97 samples were randomly chosen as the

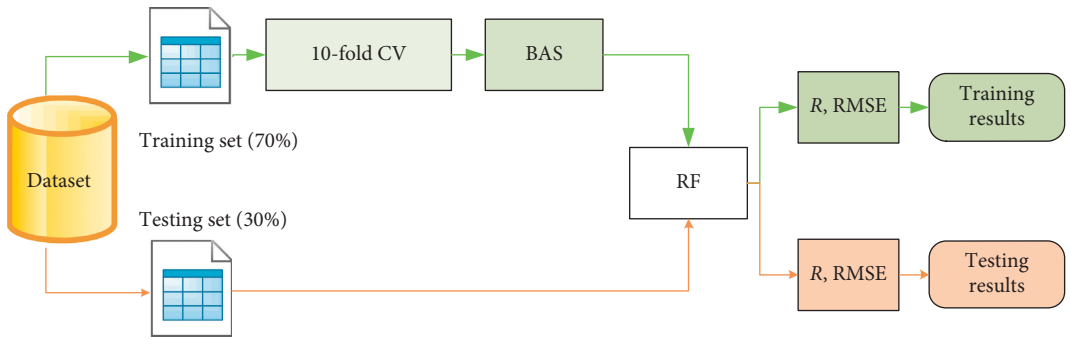

Figure 3: The flowchart of hyperparameter tuning of RF by BAS.

Table 1: The input influencing variables in the BRF model.

No.	Influencing variables	Min	Max	Average	Standard deviation
1	Cement (kg/m^3)	131	550	368.1	73.9
2	Water (kg/m^3)	150	225	187.6	24.3
3	[a]SCMs (kg/m^3)	0	357.5	71.0	125.3
4	Superplasticizer (%)	0	7.8	1.76	2.9
5	[b]CA (kg/m^3)	0	1202.8	999.8	238.3
6	[c]CRA (kg/m^3)	0	1160	63.1	186.7
7	[d]FA (kg/m^3)	0	942	619.4	165.1
8	[e]FRA (kg/m^3)	0	630	49.9	98.3
9	Ages (d)	1	91	26.6	25.7

[a]Supplementary cementitious materials; [b]coarse aggregate; [c]fine aggregate; [d]coarse rubber aggregate; [e]fine rubber aggregate.

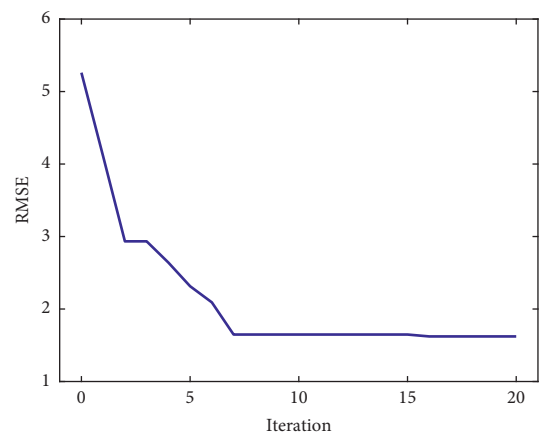

Figure 4: RMSE versus iterations.

training set and the remaining 41 samples were set as the test set.

3. Results and Discussion

3.1. Results of Hyperparameter Tuning. In this study, according to the RMSE obtained from 10-fold cross-validation, the hyperparameters were tuned on the testing set. The RMSE versus iterations during BAS tuning is shown Figure 4. As can be seen, the RMSE decreased considerably, revealing that the BAS can tune the RF effectively. Then, the RMSE became stable at 15 iterations. Here, only 20 iterations were shown. The final hyperparameters of RF are given in Table 2.

3.2. Assessment of the Established Model. The comparison of the predicted UCS of RC by the BRF model and actual UCS of RC in datasets is depicted in Figure 5. As can be seen, the predicted UCS values of RC were rather close to the actual UCS, indicating that the BRF can establish the nonlinear relationship between UCS of RC and input variables successfully, and therefore, the model can predict the strength accurately. In addition, the high R values for the training set and test set were 0.985 and 0.959, respectively. The low RMSE values of 2.24 in the training set and 3.90 in the testing set were observed. Overall, the above results showed that there is no underfitting or overfitting phenomena by the proposed BRF model.

Table 2: The obtained hyperparameters of RF.

Parameters	Empirical scope	Initial	Results
tree_num	[1, 10]	6	8
min_sample_leaf	[1, 10]	6	1

3.3. Variable Importance of RC. Furthermore, the relative importance of the input variables is shown in Figure 6. As can be seen, the age of RC was the most important variable with an important score of 1.42, and this result was consistent with the strength development of cementitious materials reported in the previous studies [12, 39]. The water-cement ratio also played a crucial role in the strength of RC, and the superposition effect of water and cement in this study was similar to the age. This agrees well with some studies that the water-cement ratio affects the strength considerably [40, 41]. As can be seen, the FA ranked third with an importance score of 1.23, which was more sensitive than CA (importance score of 0.49) in RC. Correspondingly, the FRA had a relatively larger influence on the UCS of RC than CRA. It should be pointed out that both the FRA and CRA affect the strength of RC obviously, and therefore, more attention should be paid when adding rubber materials to RC in practice. The admixture of SP and SCMs had the least influence on the strength of RC with the importance score of 0.27 and 0.24, respectively. The obtained results can guide the design of RC effectively and select the proper parameters

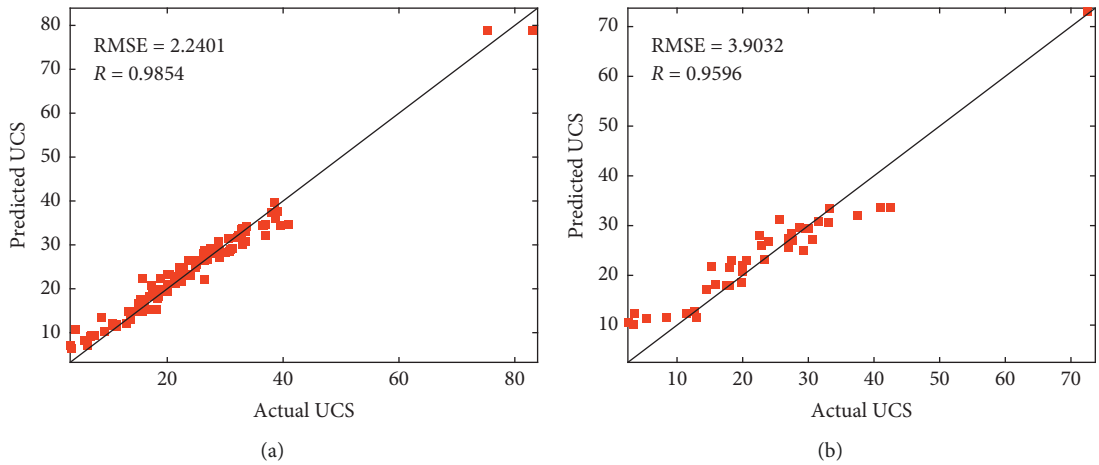

Figure 5: Comparison of UCS values. (a) Training dataset. (b) Testing dataset.

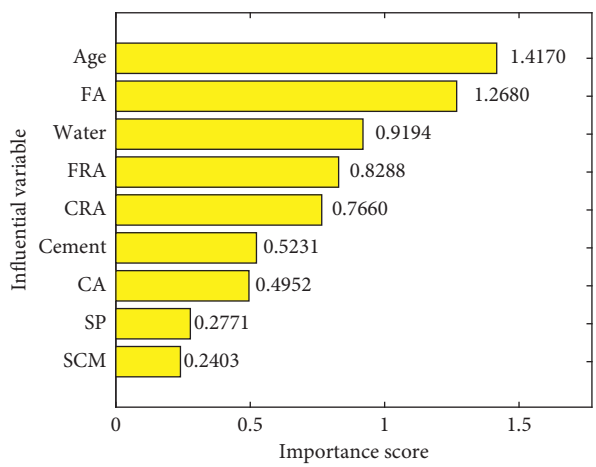

Figure 6: Variable importance of RC based on the BRF.

for optimizing RC. The results can guide the accurate design of RC and boost the application of RC.

4. Conclusions

This paper presented an evolved random forest algorithm, namely, BRF, for evaluating the UCS of RC. Based on the 138 samples collected from the previous literature and 9 key influencing variables, the compressive strength of RC can be determined by the independent variables by BRF. The hyperparameters of RF were tuned by using the BAS algorithm and validated by 10-fold cross-validation. In addition, the performance of optimized BRF was examined by R and RMSE. The variable importance was first revealed and discussed. The main results are as follows: BAS can efficiently tune the hyperparameters of RF and can be used in evolved RF to establish the BRF prediction model; the proposed BRF model can accurately predict the strength of RC, which can guide the design of RC; on the testing set, R and RMSE were 0.96 and 3.9, respectively, meaning that the proposed BRF model has a good prediction on the collected RC data; the age of RC is the most significant variable for the strength, followed by the cement ratio, FRA, CRA, and CA; the SP and SCMs have the least influence on the strength of RC.

It should be pointed out that the results were limited by the amount of the samples. If the larger dataset was obtained, the more accurate results would be derived. In the future, we would collect more samples and design a bigger dataset for analysis by machine learning methods, which can significantly promote the application of RC in the field.

Data Availability

The Microsoft Excel Worksheet data used to support the findings of this study are available from the corresponding author upon request.

Conflicts of Interest

The authors declare that there are no conflicts of interest.

Acknowledgments

This study was financially supported by the National Key Research and Development Program (Grant no. 2016YFC0600901), National Natural Science Foundation of China (Grant nos. 51574224 and 51704277), and Natural Science Fundamental Research Program Enterprise United Fund of Shaanxi Province of China (Grant no. 2019JLZ-04). The authors are grateful to Huaibei Mining (Group) Co. Ltd. Special thanks are due to Dr Zuqi Wang for her encouragement and help.

References

[1] T. Xie, A. Gholampour, and T. Ozbakkaloglu, "Toward the development of sustainable concretes with recycled concrete aggregates: comprehensive review of studies on mechanical properties," *Journal of Materials in Civil Engineering*, vol. 30, no. 9, Article ID 04018211, 2018.

[2] R. Siddique, J. Khatib, and I. Kaur, "Use of recycled plastic in concrete: a review," *Waste Management*, vol. 28, no. 10, pp. 1835–1852, 2008.

[3] Z. Z. Ismail and E. A. Al-Hashmi, "Use of waste plastic in concrete mixture as aggregate replacement," *Waste Management*, vol. 28, no. 11, pp. 2041–2047, 2008.

[4] G. Dimitriou, P. Savva, and M. F. Petrou, "Enhancing mechanical and durability properties of recycled aggregate concrete," *Construction and Building Materials*, vol. 158, pp. 228–235, 2018.

[5] S.-C. Kou, C.-S. Poon, and H.-W. Wan, "Properties of concrete prepared with low-grade recycled aggregates," *Construction and Building Materials*, vol. 36, pp. 881–889, 2012.

[6] F. Azevedo, F. Pacheco-Torgal, C. Jesus, J. L. Barroso de Aguiar, and A. F. Camões, "Properties and durability of HPC with tyre rubber wastes," *Construction and Building Materials*, vol. 34, pp. 186–191, 2012.

[7] Z. Zhang, H. Ma, and S. Qian, "Investigation on properties of ECC incorporating crumb rubber of different sizes," *Journal of Advanced Concrete Technology*, vol. 13, no. 5, pp. 241–251, 2015.

[8] A. S. Hameed and A. P. Shashikala, "Suitability of rubber concrete for railway sleepers," *Perspectives in Science*, vol. 8, pp. 32–35, 2016.

[9] R. Pacheco-Torres, E. Cerro-Prada, F. Escolano, and F. Varela, "Fatigue performance of waste rubber concrete for rigid road pavements," *Construction and Building Materials*, vol. 176, pp. 539–548, 2018.

[10] P. Asutkar, S. B. Shinde, and R. Patel, "Study on the behaviour of rubber aggregates concrete beams using analytical approach," *Engineering Science and Technology, an International Journal*, vol. 20, no. 1, pp. 151–159, 2017.

[11] A. Grinys, H. Sivilevičius, and M. Daukšys, "Tyre rubber additive effect on concrete mixture strength," *Journal of Civil Engineering and Management*, vol. 18, no. 3, pp. 393–401, 2012.

[12] I. B. Topçu, "The properties of rubberized concretes," *Cement and Concrete Research*, vol. 25, no. 2, pp. 304–310, 1995.

[13] B. S. Thomas, R. C. Gupta, P. Kalla, and L. Cseteneyi, "Strength, abrasion and permeation characteristics of cement concrete containing discarded rubber fine aggregates," *Construction and Building Materials*, vol. 59, pp. 204–212, 2014.

[14] Z. K. Khatib and F. M. Bayomy, "Rubberized portland cement concrete," *Journal of Materials in Civil Engineering*, vol. 11, no. 3, pp. 206–213, 1999.

[15] L. Zheng, X. S. Huo, and Y. Yuan, "Strength, modulus of elasticity, and brittleness index of rubberized concrete," *Journal of Materials in Civil Engineering*, vol. 20, no. 11, pp. 692–699, 2008.

[16] F. Aslani, "Mechanical properties of waste tire rubber concrete," *Journal of Materials in Civil Engineering*, vol. 28, no. 3, Article ID 4015152, 2015.

[17] T.-C. Ling, "Prediction of density and compressive strength for rubberized concrete blocks," *Construction and Building Materials*, vol. 25, no. 11, pp. 4303–4306, 2011.

[18] W. H. Yung, L. C. Yung, and L. H. Hua, "A study of the durability properties of waste tire rubber applied to self-compacting concrete," *Construction and Building Materials*, vol. 41, pp. 665–672, 2013.

[19] C. Qi, A. Fourie, Q. Chen, and Q. Zhang, "A strength prediction model using artificial intelligence for recycling waste tailings as cemented paste backfill," *Journal of Cleaner Production*, vol. 183, pp. 566–578, 2018.

[20] C. Qi, A. Fourie, and Q. Chen, "Neural network and particle swarm optimization for predicting the unconfined compressive strength of cemented paste backfill," *Construction and Building Materials*, vol. 159, pp. 473–478, 2018.

[21] J. Zhang, G. Ma, Y. Huang, J. Sun, F. Aslani, and B. Nener, "Modelling uniaxial compressive strength of lightweight self-compacting concrete using random forest regression," *Construction and Building Materials*, vol. 210, pp. 713–719, 2019.

[22] K. H. Younis and K. Pilakoutas, "Strength prediction model and methods for improving recycled aggregate concrete," *Construction and Building Materials*, vol. 49, pp. 688–701, 2013.

[23] Z. H. Duan, S. C. Kou, and C. S. Poon, "Prediction of compressive strength of recycled aggregate concrete using artificial neural networks," *Construction and Building Materials*, vol. 40, pp. 1200–1206, 2013.

[24] N. Deshpande, S. Londhe, and S. Kulkarni, "Modeling compressive strength of recycled aggregate concrete by artificial neural network, model tree and non-linear regression," *International Journal of Sustainable Built Environment*, vol. 3, no. 2, pp. 187–198, 2014.

[25] K. Sahoo, P. Sarkar, and P. Robin Davis, "Artificial Neural Networks for Prediction of Compressive Strength of Recycled Aggregate Concrete," *International Journal of Research in Chemical, Metallurgical and Civil Engineering*, vol. 3, no. 1, 2016.

[26] I. González-Taboada, B. González-Fonteboa, F. Martínez-Abella, and J. L. Pérez-Ordóñez, "Prediction of the mechanical properties of structural recycled concrete using multivariable regression and genetic programming," *Construction and Building Materials*, vol. 106, pp. 480–499, 2016.

[27] A. Gholampour, A. H. Gandomi, and T. Ozbakkaloglu, "New formulations for mechanical properties of recycled aggregate concrete using gene expression programming," *Construction and Building Materials*, vol. 130, pp. 122–145, 2017.

[28] L. Breiman, "Random forests," *Machine Learning*, vol. 45, no. 1, pp. 5–32, 2001.

[29] E. Scornet, "On the asymptotics of random forests," *Journal of Multivariate Analysis*, vol. 146, pp. 72–83, 2016.

[30] X. Jiang and S. Li, "BAS: beetle antennae search algorithm for optimization problems," *International Journal of Robotics and Control*, vol. 1, no. 1, pp. 1–3, 2018.

[31] A. Liaw and M. Wiener, "Classification and regression by random forest," *R News*, vol. 2, no. 3, pp. 18–22, 2002.

[32] S. Janitza, G. Tutz, and A.-L. Boulesteix, "Random forest for ordinal responses: prediction and variable selection," *Computational Statistics & Data Analysis*, vol. 96, pp. 57–73, 2016.

[33] Y. Sun, J. Zhang, G. Li, Y. Wang, J. Sun, and C. Jiang, "Optimized neural network using beetle antennae search for predicting the unconfined compressive strength of jet grouting coalcretes," *International Journal for Numerical and Analytical Methods in Geomechanics*, vol. 43, no. 4, pp. 801–813, 2019.

[34] Y. Sun, J. Zhang, G. Li et al., "Determination of Young's modulus of jet grouted coalcretes using an intelligent model," *Engineering Geology*, vol. 252, pp. 43–53, 2019.

[35] J. Sun, J. Zhang, Y. Gu, Y. Huang, Y. Sun, and G. Ma, "Prediction of permeability and unconfined compressive strength of pervious concrete using evolved support vector regression," *Construction and Building Materials*, vol. 207, pp. 440–449, 2019.

[36] M. M. Reda Taha, A. S. El-Dieb, M. A. Abd El-Wahab, and M. E. Abdel-Hameed, "Mechanical, fracture, and microstructural investigations of rubber concrete," *Journal of Materials in Civil Engineering*, vol. 20, no. 10, pp. 640–649, 2008.

[37] S.-F. Wong and S.-K. Ting, "Use of recycled rubber tires in normal-and high-strength concretes," *ACI Materials Journal*, vol. 106, no. 4, p. 325, 2009.

[38] Q. Dong, B. Huang, and X. Shu, "Rubber modified concrete improved by chemically active coating and silane coupling agent," *Construction and Building Materials*, vol. 48, pp. 116–123, 2013.

[39] F. Valadares, M. Bravo, and J. de Brito, "Concrete with used tire rubber aggregates: mechanical performance," *ACI Materials Journal*, vol. 109, no. 3, p. 283, 2012.

[40] Z. Chen, Y. Zhang, J. Chen, and J. Fan, "Sensitivity factors analysis on the compressive strength and flexural strength of recycled aggregate infill wall materials," *Applied Sciences*, vol. 8, no. 7, p. 1090, 2018.

[41] J. Tinoco, A. Gomes Correia, and P. Cortez, "Application of data mining techniques in the estimation of the uniaxial compressive strength of jet grouting columns over time," *Construction and Building Materials*, vol. 25, no. 3, pp. 1257–1262, 2011.