Hindawi
Advances in Civil Engineering
Volume 2021, Article ID 6733402, 12 pages
https://doi.org/10.1155/2021/6733402

Research Article

Flexural Behaviour of RC Beams with a Circular Opening at the Flexural Zone and Shear Zone Strengthened Using Steel Plates

J. Branesh Robert,[1] **R. Angeline Prabhavathy**,[1] **P. S. Joanna**,[1] **S. Christopher Ezhil Singh**,[2] **Sivaraj Murugan**,[3] **S. Rajkumar**,[3] **and Shubham Sharma**[4]

[1]*Department of Civil Engineering, Hindustan Institute of Technology and Science, Padur, Chennai, Tamil Nadu 603103, India*
[2]*Department of Mechanical Engineering, Vimal Jyothi Engineering College, Kannur, Kerala 670632, India*
[3]*Department of Mechanical Engineering, Faculty of Manufacturing, Hawassa University, Hawassa, Ethiopia*
[4]*Department of Mechanical Engineering, IK Gujral Punjab Technical University, Main Campus, Kapurthala 144603, India*

Correspondence should be addressed to Sivaraj Murugan; msivaraj2014@gmail.com

Received 6 July 2021; Revised 29 September 2021; Accepted 8 October 2021; Published 2 December 2021

Academic Editor: Wenjie Ge

In this paper, an investigation on the behaviour of RC beams with circular openings in the flexural zone and shear zone strengthened using steel plates is presented. Totally seven beams were cast: a control beam, one beam with a circular opening of size of one-third the depth of the beam (100 mmϕ) in the flexural zone, one beam with opening strengthened using the steel plate, one beam with a circular opening of size of 100 mmϕ in the shear zone, one beam with an opening in the shear zone strengthened using the steel plate, one beam with two circular openings of size of 100 mmϕ in the shear zone, and another beam with two openings in the shear zone strengthened using the steel plate. The experiments were conducted in a loading frame of 400 kN capacity. The beams were subjected to two-point loading. The ultimate load carrying capacity reduced marginally by 1.78% and 2.8% compared to that of the control beam when a circular opening of 100 mmϕ was provided in the flexural zone and shear zone, respectively, and when the opening was strengthened with steel plates, it reduced by 3.04% and 25%, respectively, but the ductility increased when steel plates were provided. Beams with an opening of size of one-third the depth of the beam (100 mmϕ) in the flexural zone strengthened with the steel plate can be provided, as the load carrying capacity is only marginally reduced compared to the control beam, and the ductility is more when compared with beams with unstrengthened openings.

1. Introduction

In high-rise framed structures, providing service ducts is necessary for various purposes. If the ducts placed under the beams are covered by a false ceiling, the height of each floor increases, resulting in a considerable increase of the total height. The service ducts are provided through openings in RC beams. As a result, the stiffness decreases, which reduces the load carrying capacity and causes excessive deflection under the service load. Many researchers have studied the strengthening of RC beam with openings which increased the load capacity effectively. In order to enhance the shear capacity and regain the strength of the beams with openings, numerous strengthening techniques were suggested. FRP can play a key part in reinforcing and strengthening the structures. The reinforced concrete beams with openings can be strengthened by CFRP sheets, GFRP sheets, laminates, rods, fabrics, and so forth with different strengthening schemes. The load carrying capacity of the reinforced concrete beams with openings increases when strengthened externally with CFRP sheets in RC T-section deep beams [1], fibre reinforced polymer sheets in RC beams [2], unidirectional CFRP fabrics in RC T-beams [3], and NSM (near surface mounted) GFRP rods saturated with epoxy in RC self-compacting concrete deep beams [4]. CFRP laminates fully wrapped around the openings in RC beams with large openings [5], CFRP and GFRP sheets both around and inside the opening [6], CFRP strips with different

orientation and axis in RC deep beams [7], inclined and vertical configurations of bonding steel plate in beams with circular opening at the shear zone [8], and end anchor system with epoxy [9] are used. The reinforced concrete beam with openings strengthened by CFRP laminates at the flexural region increases the stiffness of beam [9]. Fibre reinforced concrete beams with opening indicate that the location of opening, web reinforcement, and fibre content affect the shear strength, tensile strength, and the behaviour of deep beams [10]. The FRC specimens with strengthened boundaries attain higher strength compared to the design load and exhibit ductile failure [11]. The shear capacity of the beam increases when the openings are strengthened with mild steel strips that are 3 mm thick in reinforced concrete T-beams. The beam deflection significantly reduced in RC beams, when inclined and vertical configurations of bonding steel plate were used for strengthening the circular opening at the shear zone [8] and the CFRP sheets were used in the openings [2]. The midspan deflection at the initial stage is not affected by the size of the openings but the formation of diagonal cracks near the opening affects the beam [12].

The strengthening techniques that are very effective in preventing and controlling the formation of cracks around the opening in reinforced concrete beams with openings are externally installed FRP rods placed diagonally in full length [13], strengthening with fibre reinforced polymer sheets, strengthening with glass fibre reinforced polymer wrapping around the opening [14], and strengthening by CFRP strips with different orientation [7].

Shear compression failure occurs in RC T-section deep beams strengthened externally with CFRP sheets due to partial elimination of CFRP sheets and U-wrapped anchorage CFRP sheets [15]. The steel fibre reinforced concrete beams with openings and high moment-to-shear ratio demonstrate ductile behaviour. The beams with low moment-to-shear ratio fail due to shear cracking [16]. Steel fibre reinforced concrete deep beams with large openings and the boundary regions near the supports of specimens strengthened with steel cages formed by steel reinforced bars exhibit a ductile mode of failure [17]. Strengthening using the inclined configuration of the bonding steel plate instead of the vertical configuration in RC beams with circular opening at the shear zone changes the mode of failure from shear mode to flexural mode. The FRC specimens with strengthened boundaries exhibit ductile failure [11]. Sudden failure due to the formation of diagonal shear cracks in the top and bottom chords of the opening and detachment of CFRP wrapper from the concrete surface occur in reinforced concrete deep beams with openings strengthened by CFRP sheets [18].

Many retrofitting techniques are used in reinforced concrete beams without openings. Few of them are discussed and they can be used for reinforced concrete beams with openings in the future. A relatively thin reinforced U-shaped concrete jacket made of self-compacting concrete to repair the shear damaged RC beams restores the load carrying capacity with respect to the initial samples, enhances the overall structural performance, and alters their failure mode to a more ductile one. Jacketed beams exhibit pure flexural and enhanced ductile behaviour, whereas the corresponding initially tested beams demonstrate typical brittle shear response [19]. Another study presents a simpler approach for analysing the interface slippage distribution for jacketed RC beams that can be manipulated by engineers to accurately plot the load-deflection curves of jacketed RC beams taking into account slip impact [20]. A new retrofitting technique to upgrade the structural behaviour of shear-critical rectangular and T-shaped reinforced concrete (RC) deep beams without steel stirrups using CFRP ropes as shear reinforcement exhibits increased capacity and significant improvement in the overall behaviour compared to the control beams. The catastrophic brittle failure of the beams is prevented by altering the shear failure to a ductile flexural one [21]. The repair of heavily damaged shear-critical reinforced concrete beams jacketed with mild steel small diameter U-shaped transverse stirrups examined experimentally in thin, U-shaped cement mortar jacketing showed reduced brittleness and increased deflections at failure up to six times compared to the initially tested specimens and can alter the failure mode from brittle shear to ductile flexural under certain circumstances [22]. The beam retrofitting technique by injecting grout infilled prefabricated fibre reinforced polymer (FRP) jacket is better to repair flexural components with damage on the top rather than at the bottom of the member [23]. A promising strengthening approach is the application of externally bonded fibre reinforced polymer (EB-FRP) as a shear transverse enhancement used in vulnerable reinforced concrete (RC) beams [15]. U-jacketing in shear-critical T-beams seems to undergo premature debonding failures, resulting in significant reduction of the predictable strength. Strengthening RC beams with the U-jacketing technique using galvanised welded steel wire mesh (SWM) and thin self-compacting concrete layer is one of the most recent techniques. It is found that the utilisation of SWM has a significant influence on ductility [24]. A reinforced concrete shear-critical beam with continuous rectangular spiral reinforcement as transverse reinforcement enhances the bearing capacity and improves the shear performance. An advanced rectangular spiral reinforcement with inclined vertical links as shear reinforcement improves the postpeak deformation ductility compared to the control beams [25].

Numerical analysis using 3D finite element (FE) modelling can be used as an engineering tool, as accurate results can be obtained in a relatively short time. A smeared crack model for the postcracking behaviour of slender and deep flexural and shear-critical steel fibre reinforced concrete (SFRC) beams under tension, using the fracture characteristics of the composite material, accurately predicts the load versus deformation cyclic envelope and the influence of the fibres on the overall hysteretic performance [26]. A new constitutive hypoelastic-brittle model of concrete based on the smeared cracking approach and a method including the tension stiffening effect in connection with the bond properties between concrete and steel (TS) are developed, which accurately predict the ultimate load capacity [27]. A parametric study on reinforced concrete beams with openings in the shear zone strengthened using orthotropic

CFRP analysed by finite element method (ANSYS9) taking the maximum strain values for concrete and steel at failure loads of different opening sizes shows that the proposed model is efficient [28]. The brittle crack model offers an approximate but reliable way for modelling of concrete. The FE simulation (ABAQUS) results are favourable when compared to those observed in experiments. A study was performed by beams with spiral reinforcement under monotonic loading. However, these beams showed a rather ductile response, whereas the other beams showed brittle shear failure [29].

The literatures pertaining to the repair and retrofitting of reinforced concrete beams, deep beams, and strengthening of reinforced concrete beams with openings using different techniques like steel fibres, FRP, CFRP, GFRP, stirrups, and the finite element modelling of reinforced concrete beams with openings and their comparison with the experimental investigation are reviewed. All the strengthening methods are practically very difficult, very expensive, and time consuming and require interruption of use of the structure, while works are being carried out. Hence, there is an urgent need for the development of an improved, low cost, less disruptive technique, which makes the necessary strengthening of structures economically viable.

Almost all the researchers investigated about the external reinforcement or externally strengthened beams with openings. Some literatures discuss the use of steel plates placed externally in the form of strips to strengthen the beams with openings. Hence, strengthening to the openings in reinforced concrete beams with steel plates kept inside the openings during casting and connected using shear connectors was proposed.

No research has been conducted on RC beams with circular openings strengthened using steel plates in the flexural zone and shear zone and such beams are investigated to study their behaviour with respect to the ultimate load capacity, load-deflection behaviour, and the mode of failure.

Besides, there is no proper finite element analysis carried out on strengthened beams with openings. Therefore, this paper presents the finite element modelling of beams with openings strengthened with steel plates kept inside the openings using ABAQUS software.

A new method has been developed for strengthening the RC beams with circular openings in the flexural zone and shear zone using steel plates connected using shear connectors around the openings placed during casting of the beam. The use of steel plates around the openings for strengthening the RC beams with circular openings has not been reported so far. The outcome of this work represents promising data for further studies to be conducted in large scale to improve the load capacity of the RC beams with openings in construction works.

2. Experimental Investigations

2.1. Materials. In this study, cement OPC (grade no.53) meeting the requirements of IS 12269 and having specific gravity of 3.15 was used. The fine aggregate used in the concrete mix was M sand. Blue granite crushed stone aggregates of 20 mm size were used as coarse aggregate. Potable water without any suspended particles and impurities was used for the purpose of mixing of concrete. The mechanical properties such as specific gravity of the materials and gradation of soil were found out conducting the specific gravity test and the sieve analysis. The most commonly used grade of concrete in construction M20 grade concrete and Fe 415 steel were used. The mix design of concrete was carried out as per IS code 10262.

2.2. Test Specimen Details. In this experimental programme, totally seven beams were cast with the same cross section which included a control beam, one beam with circular opening of size of one-third the depth of the beam (100 mmϕ) in the flexural zone, one beam with opening (100 mmϕ) strengthened using steel plate, one beam with an opening (100 mmϕ) in the shear zone, one beam with an opening (100 mmϕ) in the shear zone strengthened using steel plate, one beam with two openings of size of 100 mmϕ in the shear zone, and one beam with two openings (100 mmϕ) in the shear zone strengthened using steel plate. The test specimens were of rectangular cross section having the dimensions of 150 mm width, 300 mm depth, and 2000 mm length tested under two-point loading. Each beam had a longitudinal reinforcement of 3 numbers of 12 mm dia. bars at the bottom, 2 numbers of 10 mm dia. bars at the top, and 8 mm dia. stirrups at 200 mm centre to centre spacing used as shear reinforcement. The reinforcement details of the test specimens are shown in Figure 1. 4 mm thick steel plates with shear connectors were used for strengthening the opening region. The circular opening was created by a circular steel plate inserted in the beam before casting of concrete. The details of the test specimens are shown in Table 1. Figure 2 shows the moulding, casting, and curing of beam specimens.

2.3. Test Setup. The test setup consists of a loading frame of 400 kN capacity with a hydraulic jack and a strain indicator. The edges of the beams were simply supported on roller supports placed 100 mm away from the face of the support. The beams were subjected to two concentrated static loads and subsequently increased till failure. Instrumentation included linear variable differential transducers (LVDT) with 0.01 mm accuracy for deflection measurement at the midspan of the beam and at 2 positions at a distance of 400 mm from the midspan on either side. The load was measured by a load cell with 0.05 kN accuracy attached to the hydraulic jack and used for the measurement of applied loads. The load and corresponding deflection measurements were recorded continuously during the performed tests. The strain gauges were placed at the midspan and around the openings to measure the strains in the beams. Figure 3 shows the schematic diagram of the test setup. The test setup for the reinforced concrete beam without openings is shown in Figure 4.

3. Results and Discussion

3.1. Effect of Providing the Circular Opening with and without the Steel Plate in Beams on the Load-Deflection Behaviour. The load-deflection behaviour of control beam and beams with openings of 100 mm ϕ (D/3 size) strengthened with

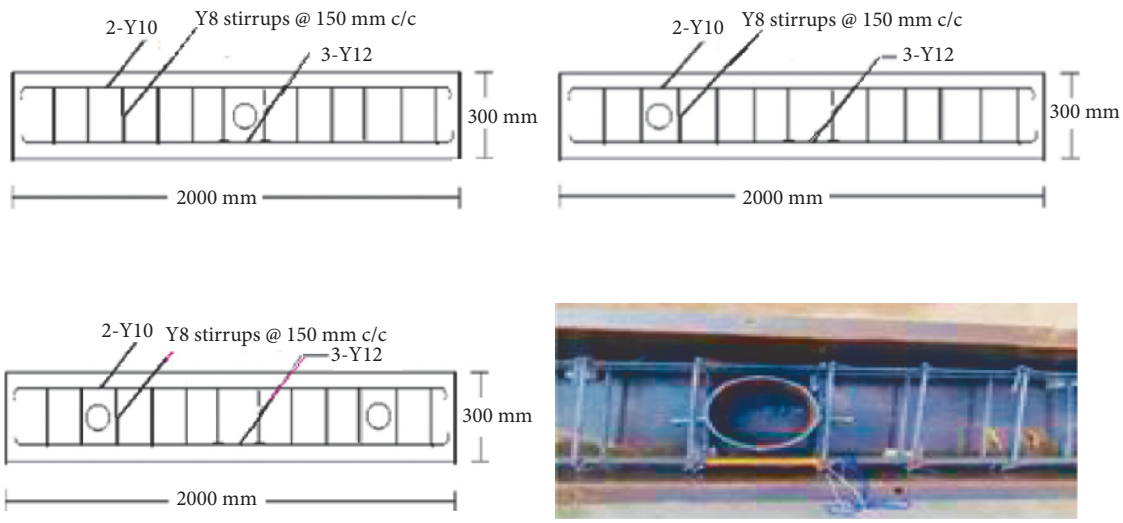

Figure 1: Reinforcement details of the beam with a circular opening.

Table 1: Details of beam specimens.

S. no.	Specimen details	Name of the specimen	Opening size
1	Control beam	CB	—
2	Beam with an opening at the flexural zone	BCOF	100 mm
3	Beam with an opening at the shear zone	BCOS1	100 mm
4	Beam with 2 openings at the shear zone	BCOS2	100 mm
5	Beam with an opening at the flexural zone (strengthened by the steel plate)	BCFSP	100 mm
6	Beam with an opening at the shear zone (strengthened by the steel plate)	BCSSP1	100 mm
7	Beam with 2 openings at the shear zone (strengthened by the steel plate)	BCSSP2	100 mm

(a)

(b)

Figure 2: Moulding, casting, and curing of beams. (a) Reinforcement detailing with steel plates for strengthening the opening, casting, and curing. (b) Cast beam specimens with an opening.

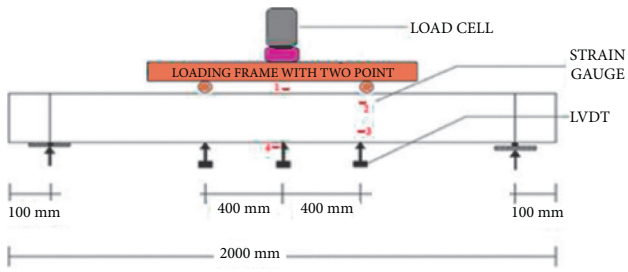

Figure 3: Test setup of the beams.

Figure 4: Test setup of the control beam.

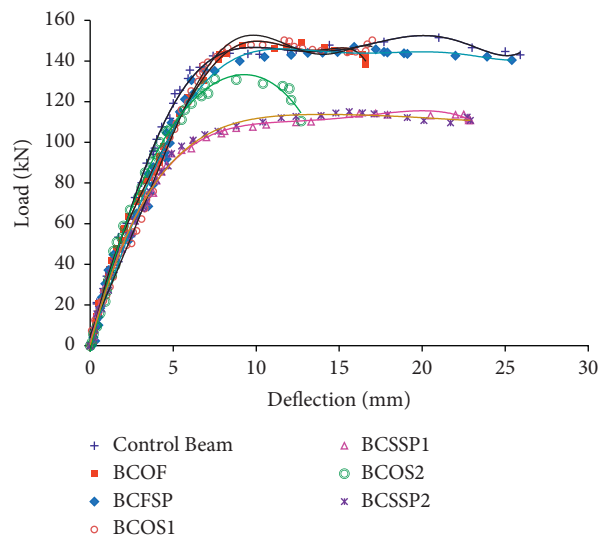

Figure 5: Load versus deflection behaviour of beams with the opening (100 mmϕ) in the flexural and shear zones with and without steel plates.

steel plates in the flexural and shear zones is shown in Figure 5.

From Figure 5, it can be seen that the beams with openings when strengthened with steel plates exhibit more ductility and the load capacity of beams with opening (100 mm ф) in the flexural and shear zones was higher compared to beams strengthened with steel plates but the ductility was less.

3.2. Effect of Providing the Circular Opening in the Flexural Zone and Shear Zone of the Beam. The load versus deflection behaviour of the beams with opening (100 mmϕ) in the flexural and shear zones is shown in Figure 6. When 2 circular openings of 100 mmϕ were provided near the supports, the ultimate load was reduced by 13.2% compared to the control beam, whereas provision of a small opening in the flexural zone as well as an opening in the shear zone marginally decreased the ultimate load.

The ultimate loads, crack load, and deflection of the control beam and RC beams having opening (100 mmϕ) are shown in Table 2.

3.3. Effect of Providing the Circular Opening with the Steel Plate in the Flexural Zone and Shear Zone. The control beam carries an ultimate load of 151.5 kN and the maximum deflection is 21 mm. Figure 7 shows the load versus deflection behaviour of beams with opening (100 mmϕ) in the flexural and shear zones with steel plates. The beams with steel plates did not fail in a brittle manner. The beam BCFSP showed a marginal reduction in the load capacity compared to control beam and the ductility is more when compared with other beams with unstrengthened openings.

3.4. Effect of Providing the Steel Plate in the Opening (100 mmϕ) Provided at the Midspan (Flexural Zone) of the Beam. The load-deflection behaviour of beams with

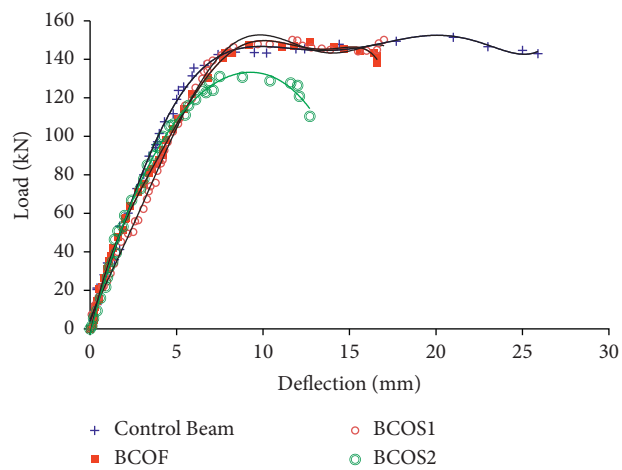

Figure 6: Load versus deflection behaviour of beams with the opening (100 mmϕ) in the flexural and shear zones.

opening (100 mmϕ) at the midspan (flexural zone) strengthened with steel plate is shown in Figure 8. The ultimate load of beam BCOF is 148.8 kN and, in beam BCFSP, when the opening was strengthened using steel plate, the ultimate load is 146.9 kN. When a circular opening of 100 mmϕ was provided at the flexural zone, for beam BCOF, the ultimate load reduced marginally (1.78%) compared to control beam and, for beam BCFSP, it reduced by 3.04%.

3.5. Effect of Providing the Steel Plate in the Opening (100 mmϕ) Provided at the Shear Zone. The ultimate load of beam with opening (100 mmϕ) at the shear zone strengthened with steel plate was reduced by 1.26% compared to the beam without strengthening because of the formation of cracks in the flexural zone due to the provision of steel plate

Table 2: Load and deflection results.

S. no.	Beam description	Crack load (kN)	Ultimate load (kN)	Deflection (mm)
1	Control beam (CB)	34.5	151.5	21
2	BCOF	41.8	148.8	12.7
3	BCFSP	37.2	146.9	15.9
4	BCOS1	29.5	150.1	17
5	BCSSP1	22.1	114.2	17.2
6	BCOS2	29.8	131.5	15.7
7	BCSSP2	21.7	115.1	15.6

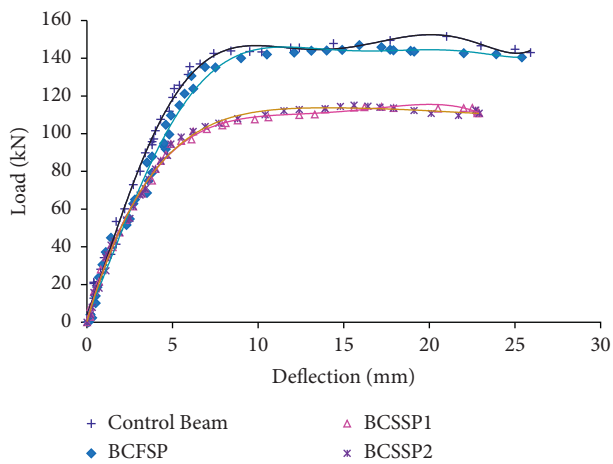

Figure 7: Load versus deflection behaviour of beams with the opening (100 mmϕ) in the flexural and shear zones strengthened with the steel plate.

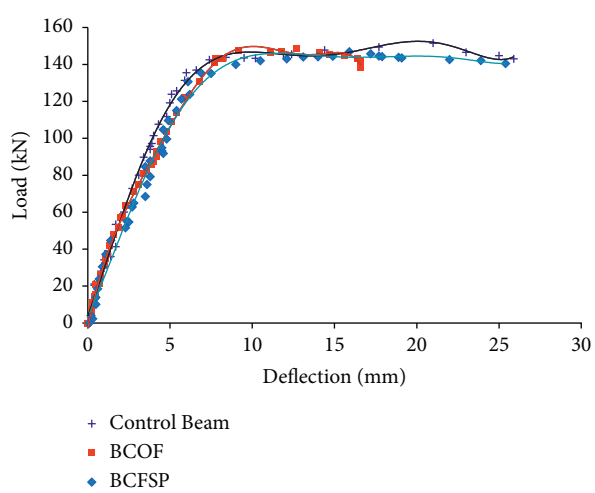

Figure 8: Load versus deflection behaviour of beams with the opening (100 mmϕ) provided at the midspan (flexural zone) of the beam.

around the opening at the shear zone. Figure 9 shows the load versus deflection behaviour of beams with an opening (100 mmϕ) in the shear zone with steel plates. The ultimate load of the beam with opening (100 mmϕ) near the support (BCOS1) was 147.2 kN and when the opening was strengthened using steel plate (BCSSP1), the ultimate load was 113.5 kN. The ultimate load reduced marginally by 2.8% for beam BCOS1 and reduced by 25% when the opening was

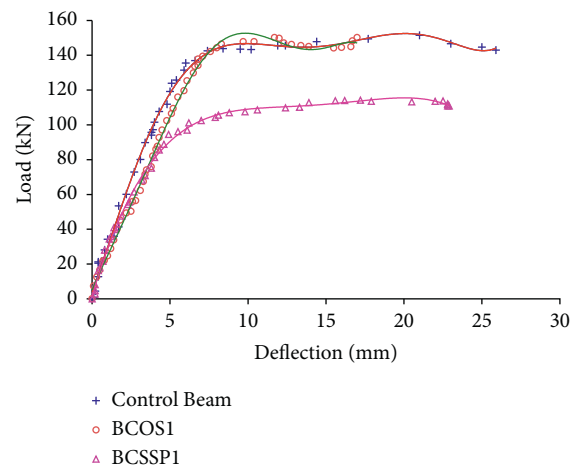

Figure 9: Load versus deflection behaviour of beams with the opening (100 mmϕ) provided at the shear zone with steel plates.

strengthened with steel plates, compared to the control beam. The ultimate load reduced marginally by 23% for beam BCSSP1 compared to the beam without strengthening as flexural cracks were formed earlier at the midspan due to strengthening of the openings in the shear zone.

3.6. Effect of Providing the Steel Plate for 2 Circular Openings (100 mmϕ) Provided at the Shear Zone of the Beam. The ultimate load of the beam with 2 openings (100 mmϕ) near the support (BCOS2) is 131.5 kN and, for beam BCSSP2, the ultimate load is 115.1 kN. Figure 10 shows the load versus deflection behaviour of beams BCOS2 and BCSSP2.

When 2 circular openings of 100 mmϕ were provided in the shear zone, the ultimate load reduced by 13.2% compared to the control beam and when the openings were strengthened with steel plates, it was reduced by 24% because flexural cracks were formed in the flexural zone.

When steel plates were provided around the openings in the shear zone, the diagonal shear cracks around the openings reduced to a larger extent and the flexural cracks appeared. The load carrying capacity of the beam reduced due to the earlier formation of flexural cracks but the ductility of the beams increases when steel plates are provided around the openings.

3.7. Failure Patterns of the Control Beam, BCOF, and BCFSP. Two modes of failure were observed in the tested beam specimens. The first mode is a diagonal breakup that happens when the diagonal crack originates from the opening

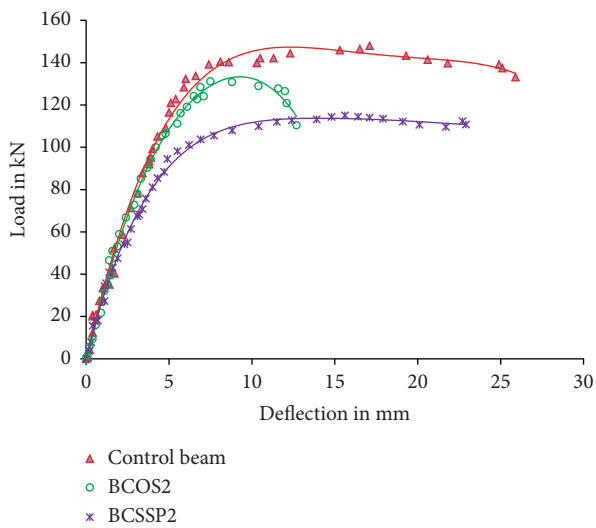

Figure 10: Load versus deflection behaviour of beams BCOS2 and BCSSP2.

corners and spreads in the direction of the load and support provided. The second mode is the shear compressive failure that occurs when the diagonal fracture is formed in the shear span, leading to excessive tension in the openings.

Figures 11 and 12 show the failure pattern of the control beam and the beam BCOF, respectively. The flexural cracks were formed first in the tension zone at a load of 34.5 kN for control beam and 41.8 kN for BCOF and propagated vertically.

Figure 13 shows the failure pattern of the beam BCFSP. For the beam BCFSP, the first crack appeared in the tension zone at a load of 37.2 kN. Steel plates provided around the openings resist the concentration of stress at the sides of the openings leading to reduction in crack formation in the flexural zone. However, diagonal shear cracks were formed in the shear zone because the flexural zone was strengthened using steel plate.

3.8. Failure Pattern of Beams BCOS1 and BCSSP1. The first crack appeared in the tension zone at a load of 23.5 kN for BCOS1 and diagonal shear cracks were noticed on the sides of the opening as shown in Figure 14. For the beam BCSSP1, when the opening was strengthened with steel plate in the shear zone, the first crack appeared in the tension zone at a load of 22.1 kN and flexural cracks occurred in the beam as shown in Figure 14, which resulted in considerable reduction in the load carrying capacity. There was a considerable reduction of diagonal cracks around the openings when the opening was strengthened in the shear zone using steel plate.

3.9. Modelling and Analysis of Beams with Circular Openings. The FEM package ABAQUS was used to create the models of the tested specimens. A nonlinear 3D FE analysis has been performed to predict the response of RC beams with circular openings in the flexural and shear zones subjected to static loading.

Concrete was assumed to be homogeneous and isotropic. Eight-node isoparametric element was used for idealisation of concrete. The reinforcement was represented by two-node truss element.

This model uses the fracture characteristics of the material taking into account the constitutive laws. The constitutive model used for concrete is formulated for stress and strain increments and it can be considered as a hypoelastic-brittle model proposed to characterise concrete deformability. The constitutive model used for steel is generalised elastic-plastic with tension stiffening effect. At first, the beam was modelled as a 3D deformable model. The element type used to model concrete was solid continuum, 3-dimensional, 8-node C3D8 element. Then the longitudinal reinforcement was also modelled as a 3D deformable model using simple truss elements. The 3-dimensional 2-node truss elements (T3D2) were selected for the simulation of main reinforcement (longitudinal steel bars) and transverse reinforcement (stirrups). The top reinforcement 2 nos. of Y10 bars, bottom reinforcement 3 nos. of Y12 bars, and the 6 mm dia. stirrups were also modelled using the 3D truss element. The steel plates were modelled as the 3D deformable shell element.

The material properties employed in the model are defined in ABAQUS, such as the properties of concrete and steel reinforcement. The ABAQUS model of concrete mainly consists of two material modelling techniques, concrete damaged plasticity (CDP) model and concrete smeared cracking. For plain and reinforced concrete models, both can be employed. In this work, the plasticity model for concrete damage is utilised to simulate the concrete.

The material properties were defined in the beam models. For concrete, the mass density, Young's modulus, and Poisson's ratio values were assigned. The values of the steel modulus of elasticity Es, yield stress, corresponding plastic strain, and Poisson's ratio were also used in the FE analysis according to the test data of the steel reinforcement. Modelling of steel reinforcement such as stirrups and steel longitudinal bars was done taking the modulus of elasticity and Poisson's ratio as 200×10^3 MPa and 0.3, respectively. The yield stress "fy" and the ultimate stress "fu" are defined in the model. The steel plates and supporting plates are designed as linear isotropic material with the elasticity modulus of steel equivalent to 200×10^3 MPa. The thickness of the steel plate was assigned. A section was created for every part given in the model, the profile names were given, and the material names were assigned.

3.9.1. Boundary Conditions. Every element's node has three degrees of freedom with x, y, and z (global coordinate system) translation. The supports were positioned at a particular distance from each edge and the edges remained free. The boundary conditions were taken as one end roller supported and another end simply supported. Concerning the boundary conditions for the supports, a line of nodes was constrained in the Ux, Uy, and Uz directions at the left side while at the right support, the translation in the X and Y directions was limited and hence functions as a roller.

Figure 11: Failure pattern of the control beam.

Figure 12: Failure pattern of beam BCOF.

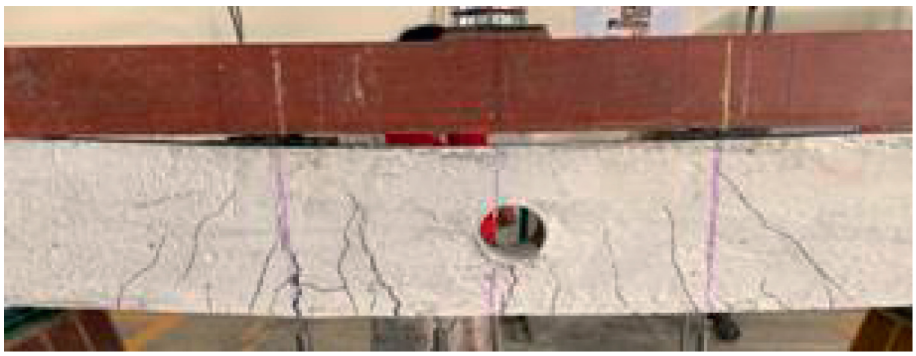

Figure 13: Failure pattern of beam BCFSP.

3.9.2. Modelling of Interfaces. In order to ensure the correct interfacial activity between the two different surfaces concrete and steel plate, the interfacial element is employed. Embedded contact is regarded for the interaction between reinforcement and concrete. The bond between reinforcement and concrete is modelled using the embedded option, the ABAQUS feature "truss in solid" for which solid and truss element nodes do not have to be in the same location. Hence, regular and coarse meshes can be used in the analysis.

Normally, the mesh size is taken in proportion to the aggregate size. Meshing depends on the type of element. The mesh was taken as 10 mm for the reinforcement bars as the element part was small and for beams, the bigger solid element, the mesh size adopted was 20 mm for the solid element.

Every part in the model was assembled, the type of analysis was taken as static and the increments and the loads as mechanical and the load type as pressure were assigned. The data are checked for error and finally submitted for analysis. Using this model, the failure pattern of the beam with openings and the deflection values were obtained.

The modes of failure observed in the models of the beam specimens are diagonal crack which originates from the opening and spreads in the direction of the load and flexural failure in the tension zone of the beam models. Figure 15 shows the simulation of FE models for steel reinforcement and steel plates in the models using the FE software ABAQUS, the deflection pattern and the failure pattern of the control beam, and the beams with circular opening in the flexural zone and the shear zone.

The analytical loads, analytical deflection, experimental deflection, and ratio of analytical and experimental deflection of the control beam and RC beams having opening (100 mmϕ) are shown in Table 3.

The finite element results demonstrate that the beam's actual behaviour is observed in the finite element models. Furthermore, the results show that the experimental beams can anticipate likely fractures occurring in the FE model to a high degree of accuracy. In addition, comparison of the experimental and the numerical results shows that, in both linear and nonlinear parts of the behaviour, the numerical models with strengthened openings are stiffer than the tested beams with strengthened openings. There is a good

(a)

(b)

Figure 14: Failure pattern of beams (a) BCOS1 and (b) BCSSP1.

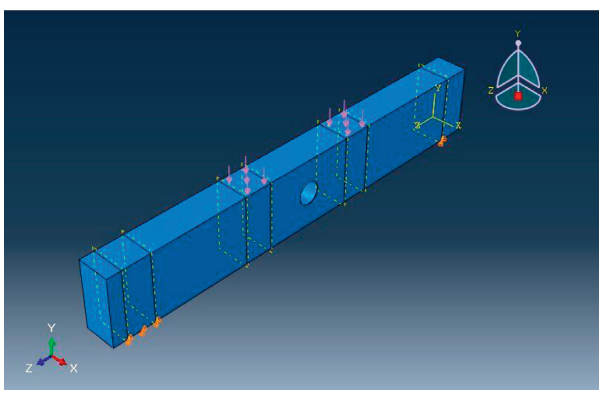

(a)

(b)

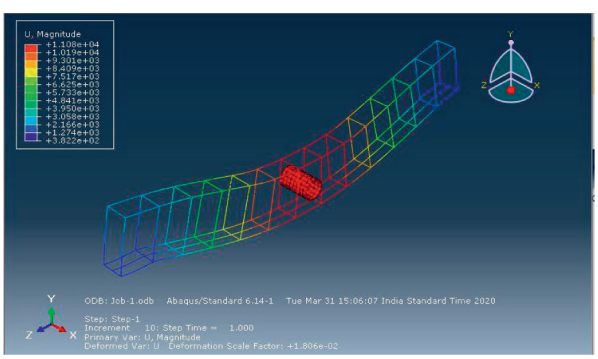

(c)

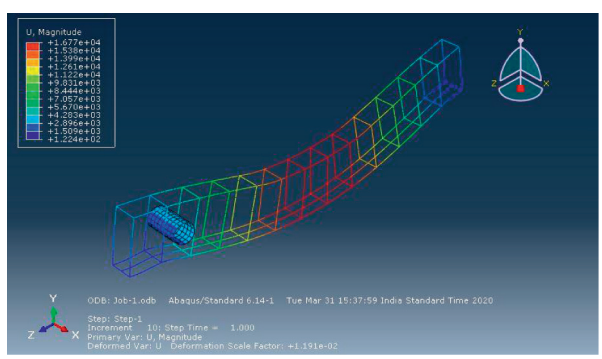

(d)

Figure 15: Continued.

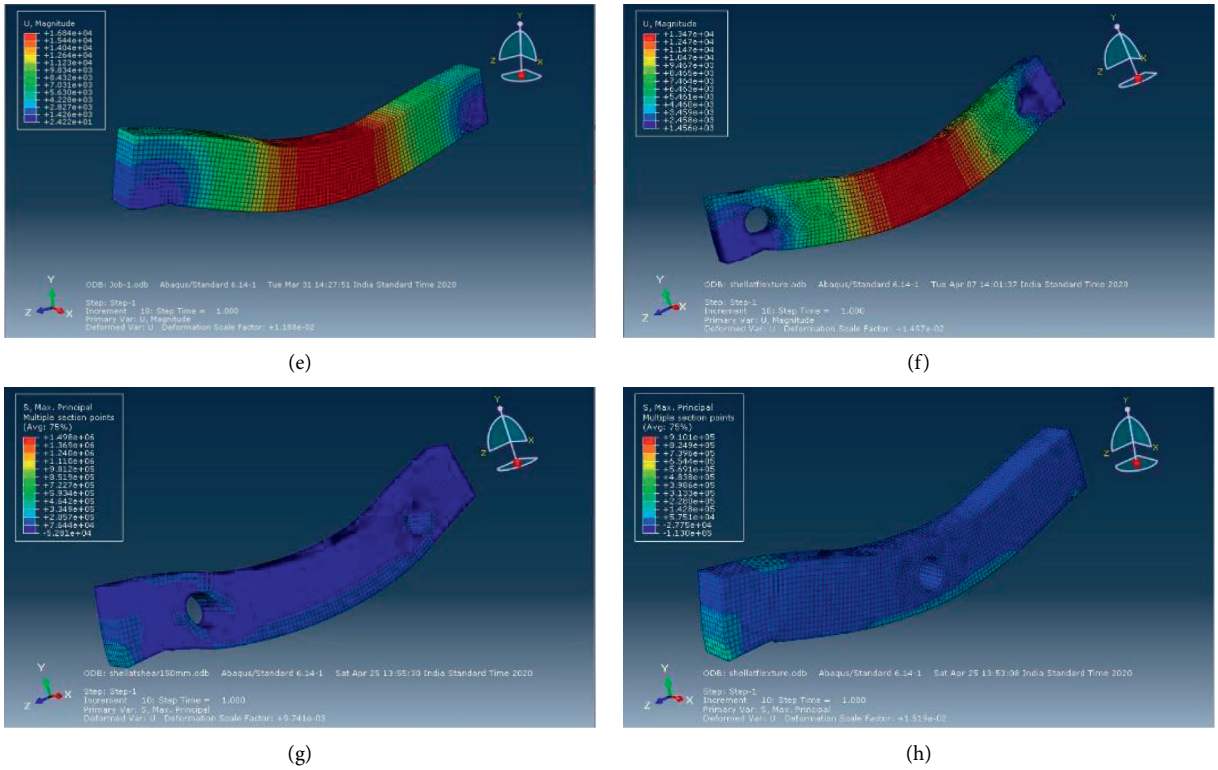

(e) (f)

(g) (h)

Figure 15: Analytical modelling of beams with circular openings in the flexural and shear zone. (a) Model with load points and supports. (b) Meshed model. (c) Reinforcement model of beam BCFSP. (d) Reinforcement model of beam BCOS1. (e) Deflection pattern for the control beam. (f) Deflection pattern for beam BCOS2. (g) Failure pattern for beam BCOS2. (h) Failure pattern for beam BCOF.

Table 3: Comparison of analytical and experimental deflection.

S. no.	Beam description	Load $P_{\text{Anal.}}$	Analytical deflection $\delta_{\text{Anal. (mm)}}$	Exper. deflection $\delta_{\text{Exp. (mm)}}$)	Ratio of $\delta_{\text{Anal}}/\delta_{\text{Exp}}$
1	CB	151.1	18.5	21	0.88
2	BCOF	148.8	13.3	12.7	1.05
3	BCFSP	146.9	14.1	15.9	0.89
4	BCOS1	147.2	17.15	16.9	1.02
5	BCSSP1	114.5	16.65	16.2	1.03
6	BCOS2	131.5	15.13	15.7	0.96
7	BCSSP2	115.1	14.75	15.6	0.95

agreement between the experimental and analytical models which allows the use of the finite element models for parametric studies related to beams with openings.

3.9.3. Effect of Providing Steel Plates around the Opening. Generally steel plates enhance the beam capacity. Earlier, when the experiments were conducted in beams using river sand, having circular opening strengthened using steel plates, an increase in the load capacity of 1.4 times and 70% was observed when two openings were provided in the shear zone and one opening was provided in the flexural zone, respectively, compared to the unstrengthened beams. When M sand was used instead of river sand, the first flexural crack occurred earlier, and the failure loads were reduced for the beams with circular openings in the shear zone strengthened using steel plates when compared to beams with unstrengthened openings in the shear zone. This may be due to M sand which was attributed to the earlier cracking of the beam in the flexural zone and caused the reduction in the load bearing capacity of the beam strengthened with steel plates. When the number of openings is raised from one to two as well, further reduction in the load carrying capacity was observed. However, steel plates improved the ductility of the beams before failure of the beams. The location of the opening affects the strength of the member to a greater extent.

This leads to the conclusion that the beams with circular opening of size of one-third the depth of the beam (100 mmϕ) in the flexural zone strengthened with steel plate can be provided as the load carrying capacity is marginally reduced when compared to the control beam and the ductility is increased by 103% when compared with the beam with unstrengthened opening.

4. Conclusion

(i) When a circular opening of one-third the depth of the beam (100 mmϕ) was provided in the flexural zone, the ultimate load reduced marginally by 1.78% and when the beam with opening was strengthened with steel plate, it reduced by 3.04%, when compared to the control beam.

(ii) Cracks formed were lesser in the case of beams with openings strengthened using steel plate when compared to the beams with openings without steel plate.

(iii) When the openings in the shear zone were strengthened with steel plates, the beams exhibited more ductility but resulted in the occurrence of flexural cracks leading to a considerable reduction in the load carrying capacity.

(iv) The finite element results demonstrate that the beam's actual behaviour is found in the finite element models. Furthermore, the results show that the experimental beams can anticipate likely fractures occurring in the FE model to a high degree of accuracy. In addition, comparison of the experimental and the numerical results shows that, in both linear and nonlinear parts of the behaviour, the numerical models with strengthened openings are stiffer than the tested beams with strengthened openings. There is a good agreement between the experimental model and the analytical model which allows the use of the finite element models for parametric studies related to beams with openings.

(v) Beam strength is greatly impacted by the number of openings.

(vi) It is concluded that the beam with opening of one-third the depth of the beam (100 mmϕ) in the flexural zone strengthened with steel plate can be provided as the load carrying capacity is marginally reduced when compared to the control beam and the ductility is increased by 103% when compared with the beam with unstrengthened opening.

Data Availability

The data used to support the findings of this study are available from the corresponding author upon request.

Conflicts of Interest

The authors declare that they have no conflicts of interest.

References

[1] H. K. Lee, S. H. Cheong, S. K. Ha, and C. G. Lee, "Behaviour and performance of RC T-section deep beams externally strengthened in shear with CFRP sheets," *Composite Structures*, vol. 93, no. 2, 2010.

[2] H. A. Abdalla, A. M. Torkey, H. A. Haggag, and A. F. Abu-Amira, "Design against cracking at openings in reinforced concrete beams strengthened with composite sheets," *Composite Structures*, vol. 60, no. 2, pp. 197–204, 2003.

[3] S. A. G. Aly, Y. H. Hammad, G. T. Abdel-Rahman, and M. Said, "Behavior of RC beams with strengthened openings in D-region," in *Proceedings of the 9th Arab Structural Engineering Conference*, pp. 163–174, Abu Dhabi, UAE, December 2003.

[4] K. M. Heiza, N. N. Meleka, and N. Y. Elwkad, "Shear strengthening of self-compacting reinforced concrete deep beams with external bonded layers," *Concrete Research Letters*, vol. 3, no. 4, pp. 507–527, 2012.

[5] S. C. Chin, N. Shafiq, and M. F. Nuruddin, "Strengthening of RC beams with large openings in shear by CFRP laminates: experiment and 2D nonlinear finite element analysis," *Research Journal of Applied Sciences, Engineering and Technology*, vol. 4, no. 9, pp. 1172–1180, 2012.

[6] R. Diggikar, S. Mangalgi, and R. Harsoor, "Behavior of RCC beam with rectangular opening strengthened by CFRP and GFRP sheets," in *Proceedings of the International conference on recent innovations in civil engineering*, pp. 25–27, Delhi, India, October 2013.

[7] B. S. Abduljalil, "Shear resistance of reinforced concrete deep beams with opening strengthened by CFRP strips," *Journal of Engineering and Development*, vol. 18, no. 1, pp. 14–32, 2014.

[8] G. Hassein Abed, *Effects of Temperature on the Adhesive Bonding in Steel Beams Reinforced with CFRP Composites*, Doctoral dissertation, University of Southampton, Southampton, England, 2012.

[9] A. Y. Ali, A. A. Ibrahim, and R. F. Yousif, "Analysis of reinforced concrete beams with openings and strengthened by (CFRP) laminates," *Univ Babylon Mag*, vol. 19, no. 3, pp. 1098–1113, 2011.

[10] V. Vengatachalapathy and R. Ilangovan, "A study on steel fiber reinforced concrete deep beams with and without openings," *International Journal of Civil and Structural Engineering*, vol. 1, no. 3, pp. 509–517, 2010.

[11] M. A. Mansur, "Effect of openings on the behaviour and strength of R/C beams in shear," *Cement and Concrete Composites*, vol. 20, no. 6, pp. 477–486, 1998.

[12] B. Aykac, I. Kalkan, S. Aykac, and Y. E. Egriboz, "Flexural behavior of RC beams with regular square or circular web openings," *Engineering Structures*, vol. 56, pp. 2165–2174, 2013.

[13] A. Pimanmas, "Strengthening R/C beams with opening by externally installed FRP rods: behavior and analysis," *Composite Structures*, vol. 92, no. 8, pp. 1957–1976, 2010.

[14] S. Mondal, J. N. Bandyapadhya, and C. P. Gautam, "Strengthening and rehabilitation of reinforced concrete beams with opening," *International Journal of Civil and Structural Engineering*, vol. 2, no. 1, pp. 127–137, 2011.

[15] C. E. Chalioris, A. G. Zapris, and C. G. Karayannis, "U-Jacketing applications of fiber-reinforced polymers in reinforced concrete T-beams against shear-tests and design," *Fibers*, vol. 8, no. 2, p. 13, 2020.

[16] X. F. Nie, S. S. Zhang, J. G. Teng, and G. M. Chen, "Experimental study on RC T-section beams with an FRP-strengthened web opening," *Composite Structures*, vol. 185, pp. 273–285, 2018.

[17] D. R. Sahoo Carlos, A. Flores, and S.-H. Chao, "Behaviour of steel fibre-reinforced concrete deep beams with large opening," *ACI Structural Journal*, vol. 109, no. 2, pp. 193–204, 2012.

[18] T. El Maaddawy and S. Sherif, "FRP composites for shear strengthening of reinforced concrete deep beams with openings," *Composite Structures*, vol. 89, no. 1, pp. 60–69, 2009.

[19] C. E. Chalioris and C. N. Pourzitidis, "Rehabilitation of shear-damaged reinforced concrete beams using self-compacting concrete jacketing," *International Scholarly Research Notices*, vol. 2012, Article ID 816107, 2012.

[20] M. M. A. Alhadid and M. A. Youssef, "Analysis of reinforced concrete beams strengthened using concrete jackets," *Engineering Structures*, vol. 132, pp. 172–187, 2017.

[21] C. Chalioris, P.-M. Kosmidou, and N. Papadopoulos, "Investigation of a new strengthening technique for RC deep beams using carbon FRP ropes as transverse reinforcements," *Fibers*, vol. 6, no. 3, p. 52, 2018.

[22] C. Chalioris, V. Kytinou, M. Voutetaki, and N. Papadopoulos, "Repair of heavily damaged RC beams failing in shear using U-shaped mortar jackets," *Buildings*, vol. 9, no. 6, p. 146, 2019.

[23] A. A. Mohammed, A. C. Manalo, G. B. Maranan et al., "Effectiveness of a novel composite jacket in repairing damaged reinforced concrete structures subject to flexural loads," *Composite Structures*, vol. 233, Article ID 111634, 2020.

[24] M. A. Abu Maraq, B. A. Tayeh, M. M. Ziara, and R. Alyousef, "Flexural behavior of RC beams strengthened with steel wire mesh and self-compacting concrete jacketing - experimental investigation and test results," *Journal of Materials Research and Technology*, vol. 10, pp. 1002–1019, 2021.

[25] C. G. Karayannis and C. E. Chalioris, "Shear tests of reinforced concrete beams with continuous rectangular spiral reinforcement," *Construction and Building Materials*, vol. 46, pp. 86–97, 2013.

[26] V. Kytinou, C. Chalioris, C. Karayannis, and A. Elenas, "Effect of steel fibers on the hysteretic performance of concrete beams with steel reinforcement-Tests and analysis," *Materials*, vol. 13, no. 13, p. 2923, 2020.

[27] S. Dudziak, "Numerically efficient three-dimensional model for non-linear finite element analysis of reinforced concrete structures," *Materials*, vol. 14, no. 7, p. 1578, 2021.

[28] A. M. Mahmoud, "Strengthening of concrete beams having shear zone openings using orthotropic CFRP modeling," *Ain Shams Engineering Journal*, vol. 3, no. 3, pp. 177–190, 2012.

[29] C. G. Karayannis, C. E. Chalioris, and P. D. Mavroeidis, "Shear capacity of RC rectangular beams with continuous spiral transversal reinforcement," *WIT Transactions on Modelling and Simulation*, vol. 41, 2005.