Hindawi Publishing Corporation
Advances in High Energy Physics
Volume 2013, Article ID 253985, 15 pages
http://dx.doi.org/10.1155/2013/253985

*Research Article*

# Energy Conditions in a Generalized Second-Order Scalar-Tensor Gravity

**M. Sharif and Saira Waheed**

*Department of Mathematics, University of the Punjab, Quaid-e-Azam Campus, Lahore 54590, Pakistan*

Correspondence should be addressed to M. Sharif; msharif.math@pu.edu.pk

Received 27 November 2012; Accepted 27 January 2013

Academic Editor: Piero Nicolini



The study of energy conditions has many significant applications in general relativistic and cosmological contexts. This paper explores the energy conditions in the framework of the most general scalar-tensor theory with field equations involving second-order derivatives. For this purpose, we use flat FRW universe model with perfect fluid matter contents. By taking power law ansatz for scalar field, we discuss the strong, weak, null, and dominant energy conditions in terms of deceleration, jerk, and snap parameters. Some particular cases of this theory like $k$-essence model, modified gravity theories and so forth. are analyzed with the help of the derived energy conditions, and the possible constraints on the free parameters of the presented models are determined.

## 1. Introduction

"The increasing rate of cosmic expansion in current phase" is one of the primal facts in modern cosmology that is supported by some sorts of energy with negative pressure as well as hidden characteristics refereed to dark energy (DE) (its existence is affirmed by the recent data of many astronomical observations) [1–4]. The investigation of this hidden unusual nature of DE has been carried out in two ways: one approach utilizes the modified matter sources, that is, different models like Chaplygin gas [5], quintessence [6–9], $k$-essence [10–12], cosmological constant [13, 14], and so forth which are introduced in the usual matter contents within the gravitational framework of general relativity (GR), while in second approach, GR framework is modified by the inclusion of some extradegrees of freedom [15, 16]. Examples of some well-known modified gravity theories include $f(R)$ gravity [17, 18], scalar-tensor theories like Brans-Dicke (BD) gravity [19, 20], Gauss-Bonnet gravity [21, 22], $f(T)$ theory [23, 24], and $f(R,T)$ gravity [25]. Modified matter sources are rather interesting but each faces some difficulties and hence could not prove to be very promising. Modified gravitational theories being large-distance modifications of gravity have brought a fresh insight in modern cosmology. Among these, scalar-tensor theories are considered to be admirable efforts for the investigation of DE characteristics, which are obtained by adding an extra scalar degree of freedom in Einstein-Hilbert action.

Scalar field provides a basis for many standard inflationary models, leading to an effective candidate of DE. In literature [26–28], many inflationary models have been constructed like chaotic inflation, small/large inflation, $k$-inflation, Dirac-Born-Infeld (DBI) inflation, single field $k$-inflation, and so forth. All of these are some peculiar extensions of the $k$-essence models. Although the $k$-essence scalar models are considered to be the general scalar field theories described by the Lagrangian in terms of first-order scalar field derivatives, that is, $L = L(\phi, \nabla\phi)$. However, Lagrangian with higher-order scalar field derivatives ($L = L(\phi, \nabla\phi, \nabla\nabla\phi)$ can be taken into account which fixes the equations of motion (obtained by metric and scalar field variations of the Lagrangian density) to second-order [29, 30]. Horndeski [29] was the pioneer to discuss the concept of most general Lagrangian with single scalar field. Recently, this action is discussed by introducing a covariant Galilean field with second-order equations of motion [30]. Kobayashi et al. [31] developed a correspondence between these Lagrangians. This theory has fascinated many researchers and much work has been done in this context, for example, [31–35].

The energy conditions have many significant theoretical applications like Hawking Penrose singularity conjecture that is based on the strong energy condition [36], while the dominant energy condition is useful in the proof of positive mass theorem [37]. Furthermore, null energy condition is a basic ingredient in the derivation of second law of black hole thermodynamics [38]. On the cosmological grounds, Visser [39] discussed various cosmological terms like distance modulus, look back time, deceleration, and statefinder parameters in terms of red shift using energy condition constraints. These conditions are originally formulated in the context of GR and then extended to modified theories of gravity. Many authors have explored these energy conditions in the framework of modified gravity and found interesting results [40–43].

Basically, modified gravity theories contain some extra-functions like higher-order derivatives of curvature term or some functions of Einstein tensor or scalar field, and so forth. Thus it is a point of debate that how one can constrain the added extra degrees of freedom consistently with the recent observations. The energy conditions can be used to put some constraints on these functions that could be consistent with those already found in the cosmological arena. Recently, these energy conditions have been discussed in $f(T)$ [44] and $f(R,T)$ [45] theories.

In this paper, we study the energy condition bounds in a most general scalar-tensor theory. The paper is designed in the following layout. Next section defines the energy conditions in GR as well as in a general modified gravitational framework. Section 3 provides basic formulation of the most general scalar-tensor theory. In the same section, we formulate the energy conditions in terms of some cosmological parameters within such modified framework. In Section 4, we provide some specific cases of this theory and discuss the corresponding constraints. Finally, we summarize and present some general remarks.

## 2. Energy Conditions

In this section, we discuss the energy conditions in GR framework and then express the respective conditions in a general modified gravity. In GR, the energy conditions come from a well-known purely geometric relationship known as Raychaudhuri equation [38, 46] together with the lineament of gravitational attractiveness. In a spacetime manifold with vector fields $u^\mu$ and $k^\mu$ as tangent vectors to timelike and null-like geodesics of the congruence, the temporal variation of expansion for the respective curves is described by the Raychaudhuri equation as

$$\begin{aligned} \frac{d\theta}{d\tau} &= -\frac{1}{3}\theta^2 - \sigma_{\mu\nu}\sigma^{\mu\nu} + \omega_{\mu\nu}\omega^{\mu\nu} - R_{\mu\nu}u^\mu u^\nu, \\ \frac{d\theta}{d\tau} &= -\frac{1}{2}\theta^2 - \sigma_{\mu\nu}\sigma^{\mu\nu} + \omega_{\mu\nu}\omega^{\mu\nu} - R_{\mu\nu}k^\mu k^\nu. \end{aligned} \tag{1}$$

Here $R_{\mu\nu}$, $\theta$, $\sigma^{\mu\nu}$, and $\omega^{\mu\nu}$ represent the Ricci tensor, expansion, shear, and rotation, respectively, related with the congruence of timelike or null-like geodesics.

The characteristic of the gravity that is attractive leads to the condition $d\theta/d\tau < 0$. For infinitesimal distortions and vanishing shear tensor $\omega_{\mu\nu} = 0$, that is, zero rotation (for any hypersurface of orthogonal congruence), we ignore the second-order terms in Raychaudhuri equation, and consequently integration leads to $\theta = -\tau R_{\mu\nu}u^\mu u^\nu = -\tau R_{\mu\nu}k^\mu k^\nu$. It further implies that

$$R_{\mu\nu}u^\mu u^\nu \geq 0, \qquad R_{\mu\nu}k^\mu k^\nu \geq 0. \tag{2}$$

Since GR and its modifications lead to a relationship of the matter contents, that is energy-momentum tensor in terms of Ricci tensor through the field equations, therefore the respective physical conditions on the energy-momentum tensor can be determined as follows:

$$\begin{aligned} R_{\mu\nu}u^\mu u^\nu &= \left(T_{\mu\nu} - \frac{T}{2}g_{\mu\nu}\right)u^\mu u^\nu \geq 0, \\ R_{\mu\nu}k^\mu k^\nu &= \left(T_{\mu\nu} - \frac{T}{2}g_{\mu\nu}\right)k^\mu k^\nu \geq 0, \end{aligned} \tag{3}$$

where $T_{\mu\nu}$ and $T$ are the energy-momentum tensor and its trace, respectively. For perfect fluid with density $\rho$ and pressure $p$ defined by

$$T_{\mu\nu} = (\rho + p)\, u_\mu u_\nu - p g_{\mu\nu}, \tag{4}$$

the strong and null energy conditions, respectively, are defined by the inequalities $\rho + 3p \geq 0$ and $\rho + p \geq 0$, while the weak and dominant energy conditions are defined, respectively, by $\rho \geq 0$ and $\rho \pm p \geq 0$.

Raychaudhuri equation being a geometrical statement works for all gravitational theories. Therefore, its interesting features like focussing of geodesic congruences as well as the attractiveness of gravity can be used to derive the energy constraints in the context of modified gravity. In case of modified gravity, we assume that the total matter contents of the universe act like perfect fluid, and consequently these conditions can be defined in terms of effective energy density and pressure (matter sources get modified, and we replace $T_{\mu\nu}$ and $T$ in (3) by $T^{\text{eff}}_{\mu\nu}$ and $T^{\text{eff}}$, resp.). These conditions can be regarded as an extension of the respective conditions in GR given by [43]

$$\begin{aligned} &\text{NEC}: \ \rho^{\text{eff}} + p^{\text{eff}} \geq 0, \\ &\text{SEC}: \ \rho^{\text{eff}} + p^{\text{eff}} \geq 0, \quad \rho^{\text{eff}} + 3p^{\text{eff}} \geq 0, \\ &\text{WEC}: \ \rho^{\text{eff}} \geq 0, \quad \rho^{\text{eff}} + p^{\text{eff}} \geq 0, \\ &\text{DEC}: \ \rho^{\text{eff}} \geq 0, \quad \rho^{\text{eff}} \pm p^{\text{eff}} \geq 0. \end{aligned} \tag{5}$$

For a detailed discussion, we suggest the readers to study a recent paper [47].

The DE requires negative EoS parameter $\omega \leq -1/3$, for the explanation of cosmic expansion. Indeed, for cosmological purposes, we are curious for a source with $\rho \geq 0$; in that case, all of the energy conditions require $\omega \geq -1$ [48]. The role of possible DE candidates with $\omega < -1$ was pointed out by Caldwell, who referred to null DEC violating sources as phantom components. It is argued that DE models with $w \geq -1$ such as the cosmological constant

and the quintessence satisfy the NEC, but the models with $\omega < -1$ (predicted for instance by the phantom theory), where the kinetic term of the scalar field has a wrong (negative) sign, does not satisfy. However, quintom models can also satisfy NEC as they yield the phantom era for a very short period of time [49]. Usually, the discussions on energy conditions for cosmological constant are available in literature by introducing it in some other type of matter like electromagnetic field [50]. The cosmological constant will trivially satisfy all these energy conditions except SEC.

## 3. Energy Conditions in the Most General Scalar-Tensor Gravity

The most general scalar-tensor theory in 4 dimensions is given by the action [31–35]

$$\begin{aligned} S = & \int d^4x\sqrt{-g} \\ & \times \Big[K(\phi, X) - G_3(\phi, X)\Box\phi + G_4(\phi, X)R \\ & + G_{4X}\left\{(\Box\phi)^2 - \left(\nabla_\mu\nabla_\nu\phi\right)\left(\nabla^\mu\nabla^\nu\phi\right)\right\} \\ & + G_5(\phi, X)G_{\mu\nu}\left(\nabla^\mu\nabla^\nu\phi\right) - \frac{1}{6}G_{5X} \\ & \times \Big\{(\Box\phi)^3 - 3(\Box\phi)\left(\nabla_\mu\nabla_\nu\phi\right)\left(\nabla^\mu\nabla^\nu\phi\right) \\ & \quad + 2\left(\nabla^\mu\nabla_\alpha\phi\right)\left(\nabla^\alpha\nabla_\beta\phi\right)\left(\nabla^\beta\nabla_\mu\phi\right)\Big\} + L_m\Big], \end{aligned} \tag{6}$$

where $\phi$ is the scalar field, $g$ is the determinant of the metric tensor, $L_m$ denotes the matter part of the Lagrangian, and $X$ represents the kinetic energy term defined by $X = -(1/2)\partial^\mu\phi\partial_\mu\phi$. Moreover, $G_{\mu\nu}$ is the Einstein tensor, $R$ is the Ricci scalar, $\nabla_\mu$ is the covariant derivative operator, and $\Box = \nabla_\mu\nabla^\mu$ is the de'Alembertian operator. The functions $K(\phi, X)$ and $G_i(\phi, X)$; $i = 3, 4, 5$ are all arbitrary functions and $G_{iX} = \partial G_i/\partial X$. In this action, the term $G_3(\phi, X)\Box\phi$ is the Galilean term, $G_4(\phi, X)R$ can yield the Einstein-Hilbert term and $G_5(\phi, X)$ leads to the interaction with Gauss-Bonnet term. This indicates that it covers not only several DE proposals like $k$-essence, $f(R)$ gravity, BD theory and Galilean gravity models, but it also contains 4-dimensional Dvali, Gabadadze, and Poratti (DGP) model (modified), the field coupling with Gauss-Bonnet term, and the field derivative coupling with Einstein tensor as its particular cases.

By varying the action (6) with respect to the metric tensor, the gravitational field equation can be written as

$$G_{\mu\nu} = \frac{1}{G_4}\Theta^{\text{eff}}_{\mu\nu} = \frac{1}{G_4}\left[T^m_{\mu\nu} + T^\phi_{\mu\nu}\right], \tag{7}$$

where $\Theta^{\text{eff}}_{\mu\nu}$ is the modified energy-momentum tensor, $T^m_{\mu\nu}$ is the source of usual matter field that can be described by the perfect fluid, while $T^\phi_{\mu\nu}$ provides the matter source due to scalar field and hence yields the source of DE, defined in the Appendix. The scalar wave equation for such modified gravity has been described in the literature [32–35].

By inverting (7), the Ricci tensor can be expressed in terms of effective energy-momentum tensor and its trace as follows:

$$R_{\mu\nu} = T^{\text{eff}}_{\mu\nu} - \frac{1}{2}g_{\mu\nu}T^{\text{eff}}, \tag{8}$$

where the effective energy-momentum tensor $T^{\text{eff}}_{\mu\nu}$ and its trace $T^{\text{eff}}$ are

$$\begin{aligned} T^{\text{eff}}_{\mu\nu} = & T_{\mu\nu} + \frac{1}{2}K_X\nabla_\mu\phi\nabla_\nu\phi - \frac{1}{2}G_{3X}\Box\phi\nabla_\nu\phi\nabla_\mu\phi \\ & - \nabla_{(\mu}G_3\nabla_{\nu)}\phi + \frac{1}{2}G_{4X}\times R\nabla_\mu\phi\nabla_\nu\phi + \frac{1}{2}G_{4XX} \\ & \times\left[(\Box\phi)^2 - \left(\nabla_\alpha\nabla_\beta\phi\right)^2\right]\nabla_\mu\phi\nabla_\nu\phi \\ & + G_{4X}\Box\phi\times\nabla_\mu\nabla_\nu\phi - G_{4X}\nabla_\lambda\nabla_\mu\phi\nabla^\lambda\nabla_\nu\phi \\ & - 2\nabla_\lambda G_{4X}\nabla^\lambda\nabla_{(\mu}\phi\nabla_{\nu)}\phi + \nabla_\lambda G_{4X}\times\nabla^\lambda\phi\nabla_\mu\nabla_\nu\phi \\ & - 2\left[G_{4X}R_{\lambda(\mu}\nabla_{\nu)}\phi\nabla^\lambda\phi - \nabla_{(\mu}G_{4X}\nabla_{\nu)}\phi\Box\phi\right] \\ & - G_{4X}\times R_{\mu\alpha\nu\beta}\nabla^\alpha\phi\nabla^\beta\phi + G_{4\phi}\nabla_\mu\nabla_\nu\phi \\ & + G_{4\phi\phi}\nabla_\mu\phi\nabla_\nu\phi - 2G_{4X\phi}\nabla^\lambda\phi\times\nabla_\lambda\nabla_{(\mu}\phi\nabla_{\nu)}\phi \\ & + G_{4XX}\nabla^\alpha\phi\nabla_\alpha\nabla_\mu\phi\nabla^\beta\phi\nabla_\beta\nabla_\nu\phi \\ & - G_{5X}R_{\alpha\beta}\nabla^\alpha\phi\times\nabla^\beta\nabla_{(\mu}\phi\nabla_{\nu)}\phi \\ & + G_{5X}R_{\alpha(\mu}\nabla_{\nu)}\phi\nabla^\alpha\phi\Box\phi + \frac{1}{2}G_{5X}R_{\alpha\beta}\nabla^\alpha\phi\nabla^\beta\phi \\ & \times\nabla_\mu\nabla_\nu\phi + \frac{1}{2}G_{5X}R_{\mu\alpha\nu\beta}\nabla^\alpha\phi\nabla^\beta\phi\Box\phi \\ & - G_{5X}R_{\alpha\lambda\beta(\mu}\nabla_{\nu)}\phi\nabla^\lambda\phi\nabla^\alpha\nabla^\beta\phi \\ & - G_{5X}R_{\alpha\lambda\beta(\mu}\nabla_{\nu)}\nabla^\lambda\phi\nabla^\alpha\phi\nabla^\beta\phi \\ & + \frac{1}{2}\nabla_{(\mu}\left[G_{5X}\nabla^\alpha\phi\right]\nabla_\alpha\nabla_{\nu)}\phi\Box\phi - \frac{1}{2} \\ & \times\nabla_{(\mu}\left[G_{5\phi}\nabla_{\nu)}\phi\right]\Box\phi + \nabla_\lambda\left[G_{5\phi}\nabla_{(\mu}\phi\right]\nabla_{\nu)}\nabla^\lambda\phi \\ & - \frac{1}{2}\left[\nabla_\lambda\left(G_{5\phi}\nabla^\lambda\phi\right) - \nabla_\alpha\left(G_{5X}\nabla_\beta\phi\right)\nabla^\alpha\nabla^\beta\phi\right] \\ & \times\nabla_\mu\nabla_\nu\phi - \nabla^\alpha G_5\nabla^\beta\phi R_{\alpha(\mu\nu)\beta} \\ & + \nabla_{(\mu}G_5R_{\nu)\lambda}\times\nabla^\lambda\phi - \frac{1}{2}\nabla_{(\mu}G_{5X}\nabla_{\nu)}\phi \\ & \times\left[(\Box\phi)^2 - \left(\nabla_\alpha\nabla_\beta\phi\right)^2\right] + \nabla^\lambda G_5R_{\lambda(\mu}\nabla_{\nu)}\phi \\ & - \nabla_\alpha\left[G_{5X}\nabla_\beta\phi\right]\nabla^\alpha\nabla_{(\mu}\phi\nabla^\beta\nabla_{\nu)}\phi + \nabla_\beta G_{5X} \\ & \times\left[\Box\phi\nabla^\beta\nabla_{(\mu}\phi - \nabla^\alpha\nabla^\beta\phi\nabla_\alpha\times\nabla_{(\mu}\phi\right]\nabla_{\nu)}\phi \\ & - \frac{1}{2}\nabla^\alpha\phi\nabla_\alpha G_{5X}\left[\Box\phi\nabla_\mu\nabla_\nu\phi - \nabla_\beta\nabla_\mu\phi\nabla_\beta\nabla_\nu\phi\right] \end{aligned}$$

$$+\frac{1}{2}G_{5X}\times G_{\alpha\beta}\nabla^{\alpha}\nabla^{\beta}\phi\nabla_{\mu}\phi\nabla_{\nu}\phi+\frac{1}{2}G_{5X}\Box\phi$$
$$\times\nabla_{\alpha}\nabla_{\mu}\phi\nabla^{\alpha}\nabla_{\nu}\phi-\frac{1}{2}G_{5X}(\Box\phi)^{2}\times\nabla_{\mu}\nabla_{\nu}\phi$$
$$-\frac{1}{12}G_{5XX}\left[(\Box\phi)^{3}-3(\Box\phi)\left(\nabla_{\alpha}\nabla_{\beta}\phi\right)^{2}+2\left(\nabla_{\alpha}\nabla_{\beta}\phi\right)^{3}\right]$$
$$\times\nabla_{\mu}\phi\times\nabla_{\nu}\phi-\frac{1}{2}\nabla_{\lambda}G_{5}R_{\mu\nu}\nabla^{\lambda}\phi, \tag{9}$$

$$\begin{aligned}
T^{\text{eff}} = {} & K+\nabla_{\lambda}G_{3}\nabla^{\lambda}\phi-2\left(G_{4\phi}\Box\phi-2XG_{4\phi\phi}\right)\\
& -2\Big\{-2G_{4X\phi}\nabla_{\alpha}\nabla_{\beta}\phi\nabla^{\alpha}\phi\nabla^{\beta}\phi+G_{4XX}\nabla_{\alpha}\nabla_{\lambda}\phi\\
& \quad\times\nabla_{\beta}\nabla^{\lambda}\phi\nabla^{\alpha}\phi\nabla^{\beta}\phi+\frac{1}{2}G_{4X}\left[(\Box\phi)^{2}-\left(\nabla_{\alpha}\nabla_{\beta}\phi\right)^{2}\right]\Big\}\\
& +2\left[G_{4X}\times R^{\alpha\beta}\nabla_{\alpha}\phi\nabla_{\beta}\phi-\nabla_{\lambda}G_{4X}\nabla^{\lambda}\phi\Box\phi\right]\\
& -\frac{1}{2}R\nabla_{\lambda}G_{5}\nabla^{\lambda}\phi\\
& -2\Big\{-\frac{1}{6}G_{5X}\left[(\Box\phi)^{3}-3\Box\phi\left(\nabla_{\alpha}\nabla_{\beta}\phi\right)^{2}+2\left(\nabla_{\alpha}\nabla_{\beta}\phi\right)^{3}\right]\\
& \quad+\nabla_{\alpha}G_{5}R^{\alpha\beta}\nabla_{\beta}\phi-\frac{1}{2}\nabla_{\alpha}G_{5\phi}\nabla^{\alpha}\phi\Box\phi+\frac{1}{2}\nabla_{\alpha}G_{5\phi}\\
& \quad\times\nabla_{\beta}\phi\nabla^{\alpha}\nabla^{\beta}\phi-\frac{1}{2}\nabla_{\alpha}G_{5X}\nabla^{\alpha}X\Box\phi+\frac{1}{2}\nabla_{\alpha}G_{5X}\\
& \quad\times\nabla_{\beta}X\nabla^{\alpha}\nabla^{\beta}\phi-\frac{1}{4}\nabla^{\lambda}G_{5X}\nabla_{\lambda}\phi\left[(\Box\phi)^{2}-\left(\nabla_{\alpha}\nabla_{\beta}\phi\right)^{2}\right]\\
& \quad+\frac{1}{2}G_{5X}R_{\alpha\beta}\nabla^{\alpha}\phi\nabla^{\beta}\phi\Box\phi-\frac{1}{2}G_{5X}\times R_{\alpha\lambda\beta\rho}\nabla^{\alpha}\phi\\
& \quad\times\nabla^{\beta}\phi\nabla^{\lambda}\phi\nabla^{\rho}\phi\Big\}+T+\frac{1}{2}K_{X}\left(\nabla_{\mu}\phi\right)^{2}\\
& -\frac{1}{2}G_{3X}\Box\phi\left(\nabla_{\mu}\phi\right)^{2}-\nabla_{\mu}G_{3}\nabla_{\mu}\phi+\frac{1}{2}G_{4X}R\left(\nabla_{\mu}\phi\right)^{2}\\
& +\frac{1}{2}G_{4XX}\left[(\Box\phi)^{2}-\left(\nabla_{\alpha}\nabla_{\beta}\phi\right)^{2}\right]\left(\nabla_{\mu}\phi\right)^{2}\\
& +G_{4X}\Box\phi\nabla_{\mu}\nabla_{\mu}\phi-G_{4X}\nabla_{\lambda}\nabla_{\mu}\phi\nabla^{\lambda}\nabla_{\mu}\phi\\
& -2\nabla_{\lambda}G_{4X}\nabla^{\lambda}(\nabla\phi)^{2}+\nabla_{\lambda}G_{4X}\times\nabla^{\lambda}\phi\nabla_{\mu}\nabla_{\mu}\phi\\
& -2\left[G_{4X}R_{\lambda\mu}\nabla_{\mu}\phi\nabla^{\lambda}\phi-\nabla_{\mu}G_{4X}\nabla_{\mu}\phi\Box\phi\right]\\
& -G_{4X}R_{\mu\alpha\mu\beta}\nabla^{\alpha}\phi\nabla^{\beta}\phi+G_{4X}\nabla_{\mu}\nabla_{\mu}\phi+G_{4\phi\phi}\left(\nabla_{\mu}\phi\right)^{2}\\
& -2G_{4X\phi}\nabla^{\lambda}\phi\times\nabla_{\lambda}\left(\nabla_{\mu}\phi\right)^{2}+G_{4XX}\nabla^{\alpha}\phi\nabla_{\alpha}\\
& \times\nabla_{\mu}\phi\nabla^{\beta}\phi\nabla_{\beta}\nabla_{\mu}\phi-G_{5X}R_{\alpha\beta}\nabla^{\alpha}\phi\nabla^{\beta}\left(\nabla_{\mu}\phi\right)^{2}\\
& +G_{5X}R_{\alpha(\mu}\nabla_{\mu)}\phi\nabla^{\alpha}\phi\Box\phi+\frac{1}{2}G_{5X}R_{\alpha\beta}\nabla^{\alpha}\phi\nabla^{\beta}\\
& \times\phi\nabla_{\mu}\nabla_{\mu}\phi+\frac{1}{2}G_{5X}\times R_{\mu\alpha\mu\beta}\nabla^{\alpha}\phi\nabla^{\beta}\phi\Box\phi\\
& -G_{5X}R_{\alpha\lambda\beta\mu}\nabla_{\mu}\phi\nabla^{\lambda}\phi\nabla^{\alpha}\nabla^{\beta}\phi-G_{5X}R_{\alpha\lambda\beta\mu}\\
& \times\nabla_{\mu}\nabla^{\lambda}\phi\nabla^{\alpha}\phi\nabla^{\beta}\phi+\frac{1}{2}\nabla_{(\mu}\left[G_{5X}\nabla^{\alpha}\phi\right]\nabla_{\alpha}\nabla_{\mu)}\phi\Box\phi\\
& -\frac{1}{2}\nabla_{(\mu}\left[G_{5\phi}\nabla_{\mu)}\phi\right]\Box\phi+\nabla_{\lambda}\left[G_{5\phi}\nabla_{(\mu}\phi\right]\nabla_{\mu)}\nabla^{\lambda}\phi\\
& -\frac{1}{2}\left[\nabla_{\lambda}\left(G_{5\phi}\nabla^{\lambda}\phi\right)-\nabla_{\alpha}\left(G_{5X}\nabla_{\beta}\phi\right)\nabla^{\alpha}\nabla^{\beta}\phi\right]\\
& \times\nabla_{\mu}\nabla_{\mu}\phi-\nabla^{\alpha}G_{5}\nabla^{\beta}\phi R_{\alpha\mu\mu\beta}+\nabla_{\mu}G_{5}R_{\mu\lambda}\nabla^{\lambda}\phi\\
& -\frac{1}{2}\nabla_{\mu}G_{5X}\times\nabla_{\mu}\phi\left[(\Box\phi)^{2}-\left(\nabla_{\alpha}\nabla_{\beta}\phi\right)^{2}\right]\\
& +\nabla^{\lambda}G_{5}R_{\lambda\mu}\nabla_{\mu}\phi-\nabla_{\alpha}\left[G_{5X}\nabla_{\beta}\phi\right]\nabla^{\alpha}\nabla_{\mu}\phi\times\nabla^{\beta}\nabla_{\mu}\phi\\
& +\nabla_{\beta}G_{5X}\left[\Box\phi\nabla^{\beta}\nabla_{(\mu}\phi-\nabla^{\alpha}\nabla^{\beta}\phi\nabla_{\alpha}\nabla_{(\mu}\phi\right]\nabla_{\mu)}\phi\\
& -\frac{1}{2}\nabla^{\alpha}\phi\times\nabla_{\alpha}G_{5X}\left[\Box\phi\nabla_{\mu}\nabla_{\mu}\phi-\nabla_{\beta}\nabla_{\mu}\phi\nabla_{\beta}\nabla_{\mu}\phi\right]\\
& +\frac{1}{2}G_{5X}G_{\alpha\beta}\nabla^{\alpha}\nabla^{\beta}\phi\left(\nabla_{\mu}\phi\right)^{2}+\frac{1}{2}G_{5X}\Box\phi\nabla_{\alpha}\nabla_{\mu}\phi\nabla^{\alpha}\nabla_{\mu}\phi\\
& -\frac{1}{2}G_{5X}(\Box\phi)^{2}\nabla_{\mu}\nabla_{\mu}\phi-\frac{1}{12}G_{5XX}\\
& \times\Big[(\Box\phi)^{3}-3(\Box\phi)\left(\nabla_{\alpha}\nabla_{\beta}\phi\right)^{2}\\
& \quad+2\left(\nabla_{\alpha}\nabla_{\beta}\phi\right)^{3}\Big]\left(\nabla_{\mu}\phi\right)^{2}-\frac{1}{2}\nabla_{\lambda}G_{5}R\nabla^{\lambda}\phi\\
& +\frac{1}{2}\nabla_{\alpha}G_{5X}\nabla_{\beta}X\nabla^{\alpha}\nabla^{\beta}\phi\\
& -\frac{1}{4}\nabla^{\alpha}G_{5X}\nabla_{\lambda}\phi\left[(\Box\phi)^{2}-\left(\nabla_{\alpha}\nabla_{\beta}\phi\right)^{2}\right]\\
& +\frac{1}{2}G_{5X}R_{\alpha\beta}\nabla^{\alpha}\phi\nabla^{\beta}\phi\Box\phi-\frac{1}{2}G_{5X}R_{\alpha\lambda\beta\rho}.
\end{aligned} \tag{10}$$

Evaluating the temporal and spatial components of the effective energy-momentum tensor and its trace defined previously and using these values in (3), we can find the energy conditions for any spacetime.

Let us consider the spatially homogeneous, isotropic, and flat FRW universe model with $a(t)$ as a scale factor described by the metric

$$ds^{2}=-dt^{2}+a^{2}(t)\left(dx^{2}+dy^{2}+dz^{2}\right). \tag{11}$$

The background fluid is taken as perfect fluid given by (4) with $u_{\mu}=(1,0,0,0)$, and the null like vector is taken as $k_{\mu}=(1,a,0,0)$. Furthermore, we assume that the scalar field is a function of time only. The Friedmann equations for the generalized scalar-tensor theory in terms of effective energy density and pressure are given by [32–35]

$$3H^{2}=\frac{\rho^{\text{eff}}}{G_{4}},\qquad -\left(3H^{2}+2\dot{H}\right)=\frac{p^{\text{eff}}}{G_{4}}, \tag{12}$$

where

$$\rho^{\text{eff}} = \frac{1}{2}\left[\rho^m + 2XK_X - K + 6X\dot{\phi}HG_{3X} - 2XG_{3\phi} + 24H^2X \times \left(G_{4X} + XG_{4XX}\right) - 12HX\dot{\phi}G_{4X\phi} - 6H\dot{\phi}G_{4\phi} + 2H^3X\dot{\phi}\left(5G_{5X} + 2XG_{5XX}\right) - 6H^2X\left(3G_{5\phi} + 2XG_{5X\phi}\right)\right], \tag{13}$$

$$p^{\text{eff}} = \frac{1}{2}\left[p^m + K - 2X\left(G_{3\phi} + \ddot{\phi}G_{3X}\right) - 12H^2XG_{4X} - 4H\dot{X}G_{4X} - 8\dot{H}XG_{4X} - 8HX\dot{X}G_{4XX} + 2\left(\ddot{\phi} + 2H\dot{\phi}\right)G_{4\phi} + 4XG_{4\phi\phi} + 4X\left(\ddot{\phi} - 2H\dot{\phi}\right) \times G_{4X\phi} - 2X\left(2H^3\dot{\phi} + 2H\dot{H}\dot{\phi} + 3H^2\ddot{\phi}\right)G_{5X} - 4H^2X^2\ddot{\phi}G_{5XX} + 4HX\left(\dot{X} - HX\right)G_{5X\phi} + 2\left[2(HX)^{\cdot} + 3H^2X\right]G_{5\phi} + 4HX\dot{\phi}G_{5\phi\phi}\right]. \tag{14}$$

Here $G_4$, being an arbitrary function of $\phi$ and $X$, acts as a dynamical gravitational constant, and it should be positive for any gravitational theory. Furthermore, $\rho^m$ and $p^m$ are density and pressure, respectively, for ordinary matter. We shall discuss its different forms in the next section. Using these values in (5), it can be checked that the NEC, WEC, SEC, and DEC require the following conditions to be satisfied:

$$\begin{aligned}
&\text{NEC}: \rho^{\text{eff}} + p^{\text{eff}} \geq 0 \Longrightarrow \\
&\frac{1}{2G_4}\left[\left(\rho^m + p^m\right) + 2XK_X + 6X\dot{\phi}HG_{3X} - 4XG_{3\phi} + 12H^2XG_{4X} + 24H^2X^2G_{4XX} - 20XH\dot{\phi}G_{4X\phi} - 2H\dot{\phi}G_{4\phi} + 6H^3X\dot{\phi}G_{5X} + 4H^3X^2\dot{\phi} \times G_{5XX} - 16H^2X^2G_{5X\phi} - 12H^2XG_{5\phi} - 2X\ddot{\phi}G_{3X} - 4H\dot{X}G_{4X} - 8\dot{H}X \times G_{4X} - 8H\dot{X}XG_{4XX} + 2\ddot{\phi}G_{4\phi} + 4XG_{\phi\phi} + 4X\ddot{\phi}G_{4X\phi} - 2X\left(2H\dot{H}\dot{\phi} + 3H^2\ddot{\phi}\right)G_{5X} - 4H^2X^2\ddot{\phi}G_{5XX} + 4HX\dot{X}G_{5X\phi} + 4(HX)^{\cdot}G_{5\phi} + 4HX\dot{\phi}G_{5\phi\phi}\right] \geq 0, \\
&\text{WEC}: \rho^{\text{eff}} + p^{\text{eff}} \geq 0, \quad \rho^{\text{eff}} \geq 0 \Longrightarrow \\
&\frac{1}{2G_4}\left[\rho^m + 2XK_X - K + 6XH\dot{\phi}G_{3X} - 2XG_{3\phi} + 24H^2X \times \left(G_{4X} + XG_{4XX}\right) - 12XH\dot{\phi} - 6H\dot{\phi}G_{4\phi} + 2H^3X\dot{\phi}\left(5G_{5X} + 2XG_{5XX}\right) - 6H^2X\left(3G_{5\phi} + 2XG_{5X\phi}\right)\right] \geq 0, \\
&\text{SEC}: \rho^{\text{eff}} + p^{\text{eff}} \geq 0, \quad \rho^{\text{eff}} + 3p^{\text{eff}} \geq 0 \Longrightarrow \\
&\frac{1}{2G_4}\left[\left(\rho^m + 3p^m\right) + 2XK_X + 2K + 6XH\dot{\phi}G_{3X} - 8XG_{3\phi} - 6X\ddot{\phi}G_{3X} - 12H^2XG_{4X} + 24H^2X^2 \times G_{4XX} - 36XH\dot{\phi}G_{4X\phi} + 6H\dot{\phi}G_{4\phi} + 6\ddot{\phi}G_{4\phi} - 2H^3X\dot{\phi}G_{5X} + 4H^3X^2\dot{\phi}G_{5XX} - 24H^2X^2G_{5X\phi} + 12HX\dot{X}G_{5X\phi} + 12(HX)^{\cdot}G_{5\phi} + 12HX\dot{\phi}G_{\phi\phi} - 12H^2X^2\ddot{\phi}G_{5XX} - 12XH\dot{H}\dot{\phi}G_{5X} - 18XH^2\ddot{\phi}G_{5X} + 12X\ddot{\phi}G_{4X\phi} - 24HX\dot{\phi}G_{4X\phi} + 12XG_{4\phi\phi} - 24HX\dot{X} \times G_{4XX} - 24\dot{H}XG_{4X} - 12H\dot{X}G_{4X} - 36H^2XG_{4X}\right] \geq 0, \\
&\text{DEC}: \rho^{\text{eff}} \geq 0, \quad \rho^{\text{eff}} + p^{\text{eff}} \geq 0, \quad \rho^{\text{eff}} - p^{\text{eff}} \geq 0 \Longrightarrow \\
&\frac{1}{2G_4}\left[\left(\rho^m - p^m\right) + 2XK_X - 2K + 6XH\dot{\phi}G_{3X} + 2X\ddot{\phi}G_{3X} + 36H^2XG_{4X} + 24H^2XG_{4XX} - 4XH\dot{\phi}G_{4X\phi} - 10H\dot{\phi}G_{4\phi} + 14H^3X\dot{\phi}G_{5X} + 4H^3X^2\dot{\phi} \times G_{5XX} - 24H^2XG_{5\phi} - 4(HX)^{\cdot}G_{5\phi} - 4HX\dot{\phi}G_{\phi\phi} - 8H^2X^2G_{5X\phi} + 4H\dot{X}G_{4X} + 8\dot{H}XG_{4X} + 8HX\dot{X}G_{4XX} - 2\ddot{\phi}G_{4\phi} - 4XG_{4\phi\phi} - 4X\ddot{\phi}G_{4X\phi} + 2X\left(2H\dot{H}\dot{\phi} + 3H^2\ddot{\phi}\right)G_{5X} + 4H^2X^2G_{5XX}\ddot{\phi} - 4HX\dot{X}G_{5X\phi}\right] \geq 0.
\end{aligned} \tag{15}$$

In a mechanical framework, the terms velocity, acceleration, jerk, and snap parameters are based on the first four time derivatives of position. In cosmology, the Hubble,

deceleration, jerk, and snap parameters are, respectively, defined as

$$H = \frac{\dot{a}}{a}, \qquad q = -\frac{1}{H^2}\frac{\ddot{a}}{a}, \qquad j = \frac{1}{H^3}\frac{\dddot{a}}{a}, \qquad s = \frac{1}{H^4}\frac{\ddddot{a}}{a}. \tag{16}$$

In order to have a more precise picture of these conditions (15), we use the relations of time derivatives of Hubble parameter in terms of cosmological quantities like deceleration, snap, and jerk parameters as

$$\dot{H} = -H^2(1+q), \qquad \ddot{H} = H^3(j+3q+2), \qquad \dddot{H} = H^4(s-2j-5q-3). \tag{17}$$

Moreover, we assume that the scalar field evolves as a power of scale factor, that is, $\phi(t) \sim a(t)^{\beta}$ [51, 52], which leads to

$$\dot{\phi} \sim \beta H a^{\beta}, \qquad \ddot{\phi} \sim \beta a^{\beta}\left(\dot{H} + \beta H^2\right) = \beta a^{\beta} H^2 (\beta - 1 - q), \qquad X \sim \frac{\beta^2 H^2 a^{2\beta}}{2}, \qquad \dot{X} \sim \beta^2 H^3 a^{2\beta}(\beta - 1 - q). \tag{18}$$

Here $\beta$ is a nonzero parameter ($\beta = 0$ yields constant scalar field, $\beta > 0$ yields expanding scalar field, and $\beta < 0$ corresponds to contracting scalar field). Clearly, $\phi$ remains as a positive quantity.

Introducing these quantities in the energy conditions given by (15), it follows that

$$\begin{aligned}
&\frac{1}{G_4}\left[K_X - 2G_{3,\phi} + 6H^2 G_{4X} - 6H^2 G_{5\phi} + 2G_{4\phi\phi}\right] \\
&\quad\times \beta^2 H^2 a^{2\beta} + \left[3HG_{3X} - 10HG_{4X\phi} + 3H^3 G_{5X} + 2HG_{5\phi\phi}\right] \\
&\quad\times \beta^3 H^3 a^{3\beta} + \left(6H^2 G_{4XX} - 4H^2 G_{5X\phi}\right) \\
&\quad\times \beta^4 H^4 a^{4\beta} - 2H^2 \beta a^{\beta} G_{4\phi} + H^8 \beta^5 a^{5\beta} G_{5XX} \\
&\quad- \beta^3 H^4 a^{3\beta}(\beta - 1 - q) G_{3X} - 4H^4 a^{2\beta} \beta^2 (\beta - 1 - q) \\
&\quad\times G_{4X} + 4H^4 a^2 \beta \beta^2 (1+q) G_{4X} - 4H^6 \beta^4 a^{4\beta} \\
&\quad\times (\beta - 1 - q) G_{4XX} + 2H^2 a^{\beta}(\beta - 1 - q)\beta G_{4\phi} \\
&\quad+ 2\beta^3 H^4 a^{3\beta}(\beta - 1 - q) G_{4X\phi} + 2H^6 (1+q)\beta^3 a^{3\beta} G_{5X} \\
&\quad- 3H^6 \beta^3 a^{3\beta}(\beta - 1 - q) G_{5X} - H^8 \beta^5 a^{5\beta} \\
&\quad\times (\beta - 1 - q) G_{5XX} + 2H^6 \beta^4 a^{4\beta} \\
&\quad\times (\beta - 1 - q) G_{5X\phi} + 4H^4 \beta^2 a^{2\beta}(\beta - 1 - q) G_{5\phi} \\
&\quad- 2H^4 (1+q)\beta^2 a^{2\beta} G_{5\phi} + (\rho^m + p^m) \geq 0,
\end{aligned}$$

$$\begin{aligned}
&\frac{1}{G_4}\left[\rho^m + 3p^m + 2K + 3\beta^3 a^{3\beta} H^4 G3X - 4\beta^2 H^2\right. \\
&\quad\times a^{2\beta} G_{3\phi} - 3\beta^3 a^{3\beta} H^4 (\beta - 1 - q) G_{3X} \\
&\quad- 6H^4 \beta^2 a^{2\beta} G_{4X} + 3H^6 \beta^4 a^{4\beta} G_{4XX} \\
&\quad- 18H^4 \beta^3 a^{3\beta} G_{X\phi} + 6H^2 \beta \times a^{\beta} G_{4\phi} + 6H^2 \beta a^{\beta} \\
&\quad\times (\beta - 1 - q) G_{4\phi} - H^6 \beta^3 a^{3\beta} G_{5X} \\
&\quad+ 2H^8 \beta^5 a^{5\beta} G_{5XX} - 3H^6 \beta^4 a^{4\beta} G_{5X\phi} + 6H^6 \beta^4 a^{4\beta} \\
&\quad\times (\beta - 1 - q) G_{5X\phi} - 6H^4 \beta^2 a^{2\beta}(1+q) G_{5\phi} \\
&\quad+ 12H^4 \beta^2 a^{2\beta}(\beta - 1 - q) G_{5\phi} + 6H^4 \beta^3 a^{3\beta} G_{5\phi\phi} \\
&\quad- 3H^8 \beta^5 a^{5\beta}(\beta - 1 - q) \times G_{5XX} \\
&\quad+ H^6 \beta^3 a^{3\beta}(1+q) G_{5X} - 9H^6 \beta^3 a^{3\beta}(\beta - 1 - q) G_{5X} \\
&\quad+ 6H^4 \beta^3 a^{3\beta} \times (\beta - 1 - q) G_{4X\phi} \\
&\quad- 12H^4 \beta^3 a^{3\beta} G_{4X\phi} + 6H^2 \beta^2 a^{2\beta} G_{4\phi\phi} \\
&\quad- 12H^6 \beta^4 a^{4\beta} \times (\beta - 1 - q) G_{4XX} + 12H^4 \beta^2 a^{2\beta} \\
&\quad\times (1+q) G_{4X} - 12H^4 \beta^2 a^{2\beta}(\beta - 1 - q) G_{4X} \\
&\quad\left.-18H^4 \beta^2 a^{2\beta} G_{4X} + \beta^2 a^{2\beta} H^2 K_X\right] \geq 0,
\end{aligned}$$

$$\begin{aligned}
&\frac{1}{G_4}\left[H^2 \beta^2 a^{2\beta} K_X - K + 3H^4 \beta^3 a^{3\beta} G_{3X} - H^2 \beta^2 a^{2\beta} G_{3\phi}\right. \\
&\quad+ 12H^4 \beta^2 a^{2\beta} G_{4X} + 6H^6 \beta^4 a^{4\beta} G_{4XX} \\
&\quad- 6H^4 \beta^3 a^{3\beta} G_{X\phi} - 6H^2 \beta a^{\beta} G_{4\phi} \\
&\quad+ 5H^6 \beta^3 a^{3\beta} G_{5X} + H^8 \beta^5 a^{5\beta} G_{5XX} - 9H^4 \\
&\quad\left.\times \beta^2 a^{2\beta} G_{5\phi} - 3H^6 \beta^4 a^{4\beta} G_{4X\phi} + \rho^m\right] \geq 0,
\end{aligned}$$

$$\begin{aligned}
&\frac{1}{G_4}\left[\rho^m - p^m + \beta^2 H^2 a^{2\beta} K_X - 2K + 3H^4 \beta^3 a^{3\beta} G_{3X}\right. \\
&\quad+ \beta^2 H^3 a^{2\beta}(\beta - q - 1) \times G_{3X} + 18\beta^2 H^4 a^{2\beta} G_{4X} \\
&\quad+ 12H^4 \beta^2 a^{2\beta} G_{4XX} - 2H^4 \beta^3 a^{3\beta} G_{4X\phi} - 10H^2 \\
&\quad\times \beta a^{\beta} G_{4\phi} + 7H^6 \beta^3 a^{3\beta} G_{5X} + H^8 \beta^5 a^5 \beta G_{5XX} \\
&\quad- 12H^4 \beta^2 a^{2\beta} G_{5\phi} - 4H^4 \beta^2 \times a^{2\beta} G_{5\phi} \\
&\quad+ 2H^4 \beta^2 a^{2\beta}(1+q) G_{5\phi} - 2H^4 \beta^3 a^{3\beta} G_{5\phi\phi} \\
&\quad- 4H^4 \beta^2 a^{2\beta} G_{X\phi} + 4 \times H^4 \beta^2 \times a^{2\beta}(\beta - q - 1) G_{4X} \\
&\quad- 4H^4 \beta^2 a^{2\beta}(1+q) G_{4X} + 4H^6 \beta^4 a^{4\beta} \\
&\quad\times (\beta - 1 - q) G_{4XX} - 2H^2 a^{\beta} \beta (\beta - 1 - q) G_{4\phi}
\end{aligned}$$

$$
\begin{aligned}
&-2H^2\beta^2a^{2\beta}G_{4\phi\phi}-2H^4\beta^3a^{3\beta}(\beta-q-1)G_{4X\phi}\\
&-2H^6\beta^3a^{3\beta}(1+q)G_{5X}+3H^6\beta^3a^{3\beta}(\beta-1-q)G_{5X}\\
&+H^8\beta^5\times a^{5\beta}(\beta-1-q)G_{5XX}\\
&-2H^6\beta^4a^{4\beta}(\beta-1-q)G_{5X\phi}\Big]\geq 0.
\end{aligned}
\tag{19}
$$

These are the most general energy conditions that can yield the energy conditions for various DE models like $k$-essence and modified theories in certain limits. In order to satisfy these conditions, it must be guaranteed that the function $G_4$ is a positive quantity. However, we have discussed earlier that $G_4$, being a gravitational constant, would be positive in all cases (if it is not so, then we impose this condition and restrict the free parameters). Clearly, these conditions are only dependent on the Hubble, deceleration parameters and arbitrary functions, namely, $K$, $G_3$, $G_4$, and $G_5$. Once these arbitrary functions are specified, the energy bounds on the selected models can be determined by using these conditions.

In order to have a better understanding of these constraints, we can use either the power law ansataz for the scale factor, for example, [45] or we can use the estimation of present values of the respective parameters available in literature. In this study, we consider the present value of the Hubble parameter $H_0 = 0.718$, the scale factor $a_0 = 1$, and the deceleration parameter $q = -0.64$ as suggested by Capozziello et al. [53]. Since it is well known that the energy constraints are satisfied for usual matter contents like perfect fluid, therefore we shall focus on validity of the energy constraints for the scalar field terms only (either we take vacuum case or assume that the energy conditions for ordinary matter hold). It is interesting to mention here that the respective energy conditions in GR can be recovered by taking the arbitrary functions $K, G_3$, and $G_5$ zero with $G_4$ as constant.

## 4. Energy Conditions in Some Particular Cases

Now we discuss application of the derived conditions to some particular cases of this theory. The violation of energy conditions leads to various interesting results. In particular, for a canonical scalar field, violation of these conditions yields instabilities and ghost pathologies. It is important to discuss the violation of these energy conditions in order to check the existence of instabilities in Horndeski theory. The procedure for FRW universe model in most general scalar-tensor theory based on tensor and scalar perturbations is available in literature [31]. By introducing perturbed metric, it has been shown that for the avoidance of ghost and gradient instabilities, the tensor perturbations suggest

$$
\begin{aligned}
\mathcal{F}_T &= 2\left[G_4 - X\left(\ddot{\phi}G_{5X}+G_{5\phi}\right)\right]>0,\\
\mathcal{G}_T &= 2\left[G_4 - 2XG_{4X} - X\left(H\dot{\phi}G_{5X}-G_{5\phi}\right)\right]>0,
\end{aligned}
\tag{20}
$$

while scalar perturbations impose

$$
\begin{aligned}
\mathcal{F}_S &= \frac{1}{a}\frac{d}{dt}\left(\frac{a}{\Theta}\mathcal{G}_T^2\right)-\mathcal{F}_T>0,\\
\mathcal{G}_S &= \frac{\Sigma}{\Theta^2}\mathcal{G}_T^2+3\mathcal{G}_T>0,
\end{aligned}
\tag{21}
$$

where the quantities $\Sigma$ and $\Theta$ are defined in [31]. We simply plug the values in these conditions for the following cases and show that violation of energy conditions leads to the existence of ghost instabilities.

*4.1. k-Essence Models in General Relativity.* The $k$-essence dynamical models of DE play a dominant role in the solution of various problems in cosmological context [54]. The action (6) can be reduced to the action for $k$-essence model in GR framework defined by $S = \int\sqrt{-g}[K(\phi,X)+(M_{pl}^2/2)R+L_m]d^4x$ with the following choice of the functions:

$$
K = K(\phi,X),\qquad G_4=\frac{M_{pl}^2}{2},\qquad G_3=G_5=0,
\tag{22}
$$

where $M_{pl}^2$ is Planck mass. The $k$-essence models can be classified into three forms:

(i) $K(\phi,X)=K_1(X)$ (Kinetic case),
(ii) $K(\phi,X)=K_1(X)B(\phi)$,
(iii) $K(\phi,X)=K_1(X)+B(\phi)$.

For the choice of arbitrary functions given by (22), the energy conditions (15) take the following forms:

$$
\begin{aligned}
&\text{NEC}: \frac{1}{M_{pl}^2}\left[2XK_X+\rho^m+p^m\right]\geq 0,\\
&\text{WEC}: \rho^{\text{eff}}+p^{\text{eff}}\geq 0,\\
&\qquad \frac{1}{M_{pl}^2}\left[2XK_X-K+\rho^m\right]\geq 0,\\
&\text{SEC}: \rho^{\text{eff}}+p^{\text{eff}}\geq 0,\\
&\qquad \frac{1}{M_{pl}^2}\left[2XK_X+2K+\rho^m+3p^m\right]\geq 0,\\
&\text{DEC}: \rho^{\text{eff}}+p^{\text{eff}}\geq 0,\qquad \rho^{\text{eff}}\geq 0,\\
&\qquad \frac{1}{M_{pl}^2}\left[2XK_X-2K+\rho^m-p^m\right]\geq 0.
\end{aligned}
\tag{23}
$$

Here $K(\phi,X)$ is arbitrary.

In order to see how the function $K(\phi,X)$ can be constrained by using the previous energy conditions, we choose a particular model of $k$-essence [55] as follows:

$$
\begin{aligned}
K(\phi,X) = &\frac{1}{2}\left[C_2-C_1-2B\phi^2\right]+\frac{1}{2}(C_1+C_2)X\\
&+\frac{1}{2}M_0^4(X-1)^2,
\end{aligned}
\tag{24}
$$

where $C_1$, $C_2$, $B$, and $M_0$ are arbitrary constants. In this case, WEC requires the following conditions:

$$\frac{1}{M_{pl}^2}\left[\frac{1}{2}X\left(C_1+C_2\right)+2XM_0^4\left(X-1\right)\right.$$
$$\left.-\frac{1}{2}M_0^4(X-1)^2-\frac{1}{2}\left(C_2-C_1-2B\phi^2\right)+\rho^m\right]\geq 0,$$
$$\frac{1}{M_{pl}^2}\left[X\left(C_1+C_2\right)+2M_0^4X\left(X-1\right)+\rho^m+p^m\right]\geq 0, \tag{25}$$

where $M_{pl}^2 > 0$. For the interpretation of the previous inequalities, we consider the power law ansatz for the scalar field $\phi \sim a^\beta$; $\beta \neq 0$, which further yields $X \sim (\beta^2 a^{2\beta} H^2/2)$. Consequently, the WEC (25) turns out to be

$$\left[\frac{1}{2}\frac{\beta^2a^{2\beta}H^2}{2}\left(C_1+C_2\right)+2\frac{\beta^2a^{2\beta}H^2}{2}M_0^4\left(\frac{\beta^2a^{2\beta}H^2}{2}-1\right)\right.$$
$$\left.-\frac{1}{2}M_0^4\left(\frac{\beta^2a^{2\beta}H^2}{2}-1\right)^2-\frac{1}{2}\left(C_2-C_1-2B\phi^2\right)+\rho^m\right]\geq 0, \tag{26}$$

$$\left[\frac{\beta^2a^{2\beta}H^2}{2}\left(C_1+C_2\right)+2M_0^4\frac{\beta^2a^{2\beta}H^2}{2}\right.$$
$$\left.\times\left(\frac{\beta^2a^{2\beta}H^2}{2}-1\right)+\rho^m+p^m\right]\geq 0. \tag{27}$$

It is difficult to find the admissible ranges of all constants $C_1$, $C_2$, $B$, $M_0$, and $\beta$ from the previous conditions. In order to find the constraints on these parameters, we consider that these conditions are satisfied for ordinary matter, that is, $\rho^m > 0$ and $\rho^m + p^m > 0$. Moreover, we take the present value of Hubble parameter and choose some particular values of the constants $C_1$ and $C_2$ to find the ranges of $B$, $M_0$, and $\beta$, consistent with the WEC. It turns out from the graphs that we can take the parameter $\beta$ as follows $\beta > 1.4$, $0 < \beta < 1.4$ and $\beta < 0$, while $B$ and can be positive or negative. For the consistency of condition (27), we restrict the parameter $M_0$ as $0 < M_0 < 1$. From the condition (26), it can be observed that energy conditions are satisfied only when we take $\beta > 1.4$, with arbitrary $B$ and $\beta < 1.4$ with $B > 10$ only. Other choices of these parameters lead to violation of WEC. Figures 1(a) and 1(b) show that WEC is satisfied with these fixed input parameters by taking $\beta > 1.4$, $0 < M_0 < 1$, and $0 < B < 1$.

*4.2. Brans-Dicke Theory.* Brans-Dicke gravity with action $\int\sqrt{-g}[(M_{pl}X\omega/\phi)-V(\phi)+(1/2)M_{pl}R\phi+L_m]d^4x$ can be defined by the following choice of functions:

$$K=\frac{M_{pl}X\omega}{\phi}-V\left(\phi\right),\qquad G_3=G_5=0,$$
$$G_4=\frac{1}{2}M_{pl}\phi. \tag{28}$$

Here $\omega$ is the BD parameter and $V$ is the field potential. The action for general scalar-tensor gravity can be obtained by taking $F(\phi)$ instead of $\phi$ in $G_4$. In this case, the energy conditions take the form

$$\text{NEC}: \frac{1}{M_{pl}}\left[\frac{\dot\phi^2}{\phi^2}M_{pl}\omega-\frac{H\dot\phi}{\phi}M_{pl}+\frac{\ddot\phi}{\phi}M_{pl}+\frac{\rho^m+p^m}{\phi}\right]\geq 0,$$
$$\text{WEC}: \rho^{\text{eff}}+p^{\text{eff}}\geq 0,$$
$$\frac{1}{M_{pl}}\left[\frac{\omega M_{pl}\dot\phi^2}{2\phi^2}+\frac{V\left(\phi\right)}{\phi}-\frac{3H\dot\phi}{\phi}M_{pl}+\frac{\rho^m}{\phi}\right]\geq 0,$$
$$\text{SEC}: \rho^{\text{eff}}+p^{\text{eff}}\geq 0,$$
$$\frac{1}{M_{pl}}\left[2\frac{\dot\phi^2}{\phi^2}M_{pl}\omega-\frac{2V\left(\phi\right)}{\phi}+\frac{3H\dot\phi}{\phi}M_{pl}\right.$$
$$\left.+3\frac{\ddot\phi}{\phi}M_{pl}+\frac{\rho^m+3p^m}{\phi}\right]\geq 0,$$
$$\text{DEC}: \rho^{\text{eff}}+p^{\text{eff}}\geq 0,\quad \rho^{\text{eff}}\geq 0,$$
$$\frac{1}{M_{pl}}\left[2\frac{V\left(\phi\right)}{\phi}-5\frac{H\dot\phi}{\phi}M_{pl}\right.$$
$$\left.-\frac{\ddot\phi}{\phi}M_{pl}+\frac{\rho^m-p^m}{\phi}\right]\geq 0. \tag{29}$$

A suitable choice of the field potential has always been a matter of debate in BD gravity. We use power laws for the scalar field and potential as $\phi = \phi_0 a^\beta$ and $V = V_0\phi^m$, respectively, where $m$ and $\beta$ are nonzero parameters. Consequently, the WEC restricts the parameters as

$$V_0\geq 3H_0^2\beta-\frac{\omega}{2}\beta^2H_0^2,$$
$$\beta^2H_0^2\omega-H_0^2\beta+H_0^2a^\beta\beta^2-a^\beta\beta H_0^2\left(1+q_0\right)\geq 0. \tag{30}$$

For accelerated expanding universe, the observed range of BD parameter is $-2 < \omega < -3/2$ [56]. Clearly, both of these conditions are independent of the parameter $m$ which shows that these conditions are valid for both the positive and inverse power law potentials; however, these conditions depend on the present value of the field potential. Figure 2(a) shows that the condition $\rho^{\text{eff}} \geq 0$ leads to $\beta < 0$, which further yields positive present value of the BD field potential $V_0$. Moreover, the second condition will be satisfied if we take $\beta < 0$ with arbitrary $\omega$ and $\beta > 0$ with $\omega > 0$ only. Figure 2(b) indicates that $\rho^{\text{eff}} + p^{\text{eff}} \geq 0$ is satisfied for a particular choice of $\beta < 0$ and $-2 < \omega < -1.5$. Clearly, the energy condition $\rho^{\text{eff}} + p^{\text{eff}} \geq 0$ is violated for $\beta > 0$ with $\omega < 0$. It is easy to check that this choice of parameters ($\beta = 2$, $\omega = -1.8$)

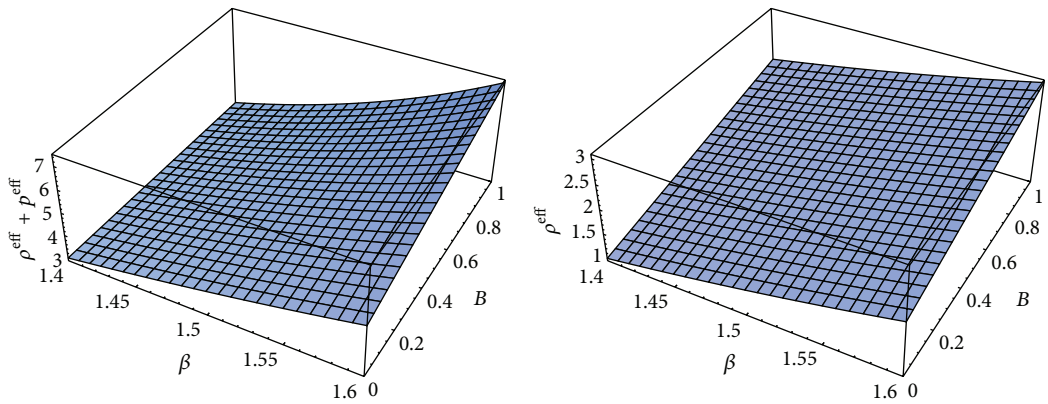


(a) $\rho^{\text{eff}} + p^{\text{eff}} \geq 0$ (b) $\rho^{\text{eff}} \geq 0$

Figure 1: Plot (a) shows $\rho^{\text{eff}} + p^{\text{eff}} \geq 0$ versus $\beta$ and $M_0$. Plot (b) represents $\rho^{\text{eff}} \geq 0$ versus parameters $\beta$ and $B$ with $M_0 = 0.2$. In both cases, we take the present values of cosmological parameters with $C_1 = 1, C_2 = 2$.

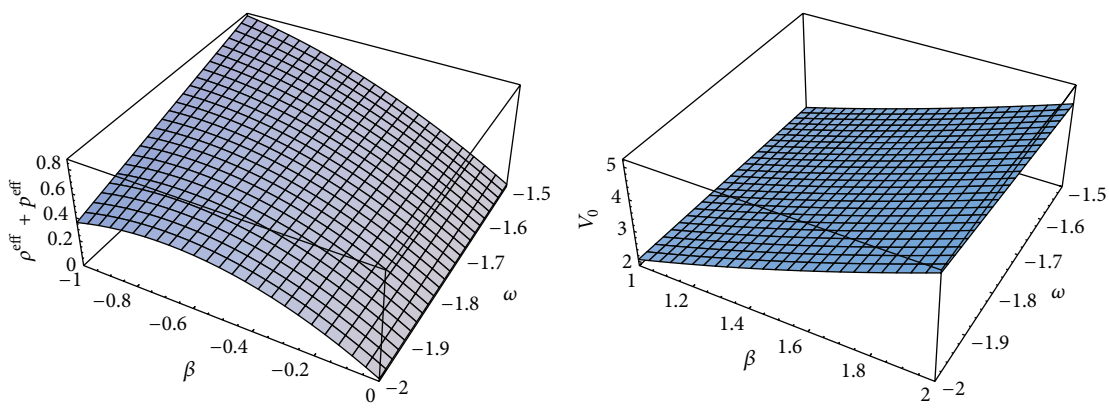


(a) $\rho^{\text{eff}} + p^{\text{eff}} \geq 0$ (b) $\rho^{\text{eff}} \geq 0$ ($V_0 \geq 0$)

Figure 2: Plots (a) and (b) show WEC versus parameters $\omega$ and $\beta$ for $H_0 = 0.718$ and $q_0 = -0.64$.

also leads to the violation of condition imposed by scalar perturbations given by the expression

$$\frac{2H\phi^2 + 4\phi\dot{\phi}}{2H\phi + \dot{\phi}^2} - \frac{2\phi^2\left(2H\dot{\phi} + 2\dot{H}\phi + \ddot{\phi}\right)}{\left(2H\phi + \dot{\phi}^2\right)^2} > a\phi,$$
$$4\phi^2\left(\frac{X\omega/\phi - 3H^2\phi - H\dot{\phi}/2}{\left(2H\phi + \dot{\phi}^2\right)^2}\right) + 3\phi > 0 \tag{31}$$

and consequently yields the ghost instabilities for the model. However, the conditions imposed by tensor perturbation are trivially satisfied.

*4.3. $f(R)$ Gravity.* The action for $f(R)$ gravity described by $S = \int \sqrt{-g}[(M_{pl}^2/2)f(R) + L_m]d^4x$ can be obtained from the action (6) for

$$K = -\frac{M_{pl}^2}{2}\left(Rf_R - f\right), \qquad G_3 = G_5 = 0,$$
$$G_4 = \frac{M_{pl}}{2}\phi, \quad \phi = M_{pl}f_{,R}. \tag{32}$$

Here $f(R)$ is an arbitrary function of the Rici scalar. Using these values in energy conditions (15), we obtain

$$\text{NEC}: \left(\ddot{R} - \dot{R}H\right)f''(R) + \dot{R}^2 f'''(R) + \rho^m + p^m \geq 0,$$

$$\text{WEC}: \rho^{\text{eff}} + p^{\text{eff}} \geq 0,$$

$$\rho^m - \frac{1}{2}\left(f(R) - Rf'(R)\right) - 3H\dot{R}f''(R) \geq 0,$$

$$\begin{aligned}
&\text{SEC}: \rho^{\text{eff}} + p^{\text{eff}} \geq 0,\\
&\quad \left(f(R) - Rf'(R)\right) + 3\left(\ddot{R} + \dot{R}H\right) f''(R)\\
&\quad + 3\dot{R}^2 f'''(R) + \rho^m + 3p^m \geq 0,\\
&\text{DEC}: \rho^{\text{eff}} + p^{\text{eff}} \geq 0, \qquad \rho^{\text{eff}} \geq 0\\
&\quad -\left(5H\dot{R} + \ddot{R}\right) f''(R) - \dot{R}^2 f'''(R)\\
&\quad -\left(f(R) - Rf'(R)\right) + \rho^m - p^m \geq 0,
\end{aligned} \tag{33}$$

where prime denotes the derivative with respect to $R$. Let us consider the example of logarithmic model in $f(R)$ gravity defined by [57]

$$f(R) = R[\log(\alpha R)]^q - R; \quad \alpha < 0,\ q > 0. \tag{34}$$

In this case, the WEC ($\rho^{\text{eff}} \geq 0$) leads to

$$\begin{aligned}
&-6H_0^2(1-q_0)\left[\log\left(-6\alpha H_0^2(1-q_0)\right)\right]^q + 6H_0^2(1-q_0)\\
&+6H_0^2(1-q_0)\\
&\times\left[\left(\log\left(-6\alpha H_0^2(1-q_0)\right)\right)^q\right.\\
&\quad\left.+q\left(\log\left(-6\alpha H_0^2(1-q_0)\right)\right)^{q-1} - 1\right] - 36H_0^4\\
&\times(j_0 - q_0 - 2)\\
&\times\left[\frac{q}{6H_0^2(1-q_0)}\left(\log\left(-6\alpha H_0^2(1-q_0)\right)^q\right)\right.\\
&\quad\left.+\frac{q(q-1)}{6H_0^2(1-q_0)}\times\left(\log\left(-6\alpha H_0^2(1-q_0)\right)\right)^{q-2}\right] \geq 0,
\end{aligned} \tag{35}$$

where we have used $\dot{R} = -6H^2(1-q)$ and the present values of respective parameters. Notice that we have taken only the condition $\rho^{\text{eff}} \geq 0$ as the other condition involves the present value of snap parameter $s$ which is not correctly estimated in the literature yet. Figure 3 shows that the WEC is satisfied for a suitable range of both the parameters $q$ and $\alpha$.

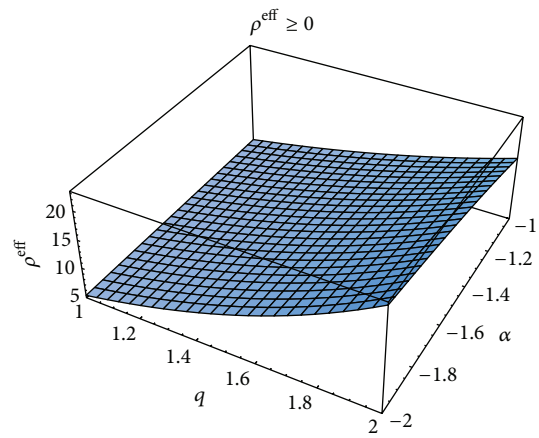


Figure 3: Plot shows WEC versus free parameters $q$ and $\alpha$. Here we take $q_0 = -0.64$, $H_0 = 0.718$, and $j_0 = 1.41$.

*4.4. Kinetic Gravity Braiding Model.* Kinetic gravity braiding is defined by the action [58]

$$\begin{aligned}
S = \int d^4x\sqrt{-g}\Bigg(&K(\phi, X) - G_3(\phi, X)\Box\phi + \frac{M_{pl}^2}{2}R + \frac{M_{pl}^2}{2}\\
&\times\left[(\Box\phi)^2 - \left(\nabla_\mu\nabla_\nu\phi\right)\left(\nabla^\mu\nabla^\nu\phi\right)\right] + L_m\Bigg),
\end{aligned} \tag{36}$$

where the functions $K$ and $G_3$ are arbitrary (while other functions are taken to be zero in action (6)). A particular choice of these functions proposed by Dvali and Turner [59] is given by $K = -X$ and $G_3 = cX^n$, where $c$ and $n$ are constants. For this choice of model, the respective energy conditions turn out to be

$$\begin{aligned}
&\text{NEC}: \frac{1}{M_{pl}^2}\left[-2X + 6ncH\dot{\phi}X^n - 2cnX^n\ddot{\phi} + \rho^m + p^m\right] \geq 0,\\
&\text{WEC}: \rho^{\text{eff}} + p^{\text{eff}} \geq 0, \qquad \frac{1}{M_{pl}^2}\left[-X + 6ncH\dot{\phi}X^n + \rho^m\right] \geq 0,\\
&\text{SEC}: \rho^{\text{eff}} + p^{\text{eff}} \geq 0,\\
&\quad \frac{1}{M_{pl}^2}\left[-4X + 6ncH\dot{\phi}X^n - 6cnX^n\ddot{\phi} + \rho^m + 3p^m\right] \geq 0,\\
&\text{DEC}: \rho^{\text{eff}} + p^{\text{eff}} \geq 0, \qquad \rho^{\text{eff}} \geq 0,\\
&\quad \frac{1}{M_{pl}^2}\left[6ncH\dot{\phi}X^n + 2cnX^n\ddot{\phi} + \rho^m - p^m\right] \geq 0.
\end{aligned} \tag{37}$$

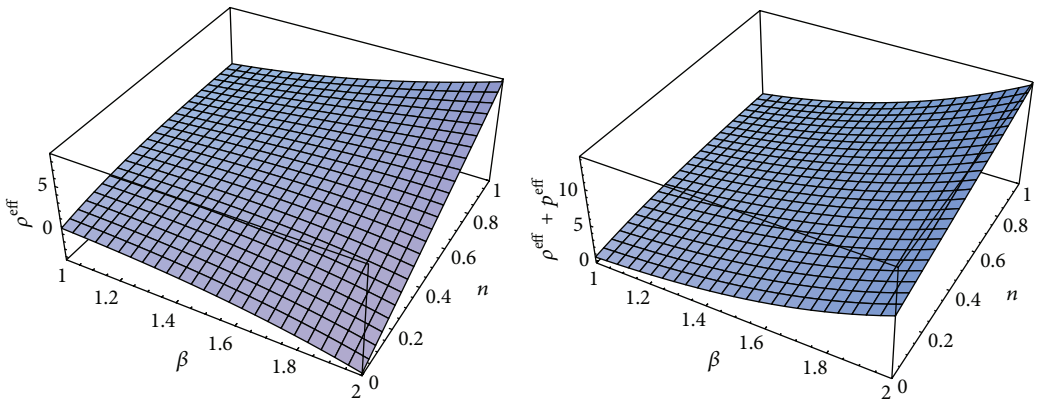


(a) $\rho^{\text{eff}} \geq 0$ (b) $\rho^{\text{eff}} + p^{\text{eff}} \geq 0$

Figure 4: Plots (a) and (b) show WEC, namely, $\rho^{\text{eff}} \geq 0$ and $\rho^{\text{eff}} + p^{\text{eff}} \geq 0$ versus parameters $n$ and $\beta$.

By taking the power law evolution of the scalar field, WEC yields

$$\left[-\frac{\beta^2 a^{2\beta} H^2}{2} + 6ncH\dot{\phi}\left(\frac{\beta^2 a^{2\beta} H^2}{2}\right)^n\right] \geq 0,$$
$$\left[-2\frac{\beta^2 a^{2\beta} H^2}{2} + 6ncH\dot{\phi}\left(\frac{\beta^2 a^{2\beta} H^2}{2}\right)^n - 2cn\left(\frac{\beta^2 a^{2\beta} H^2}{2}\right)^n \ddot{\phi}\right] \geq 0. \tag{38}$$

Here we have taken the present values of the ordinary density and pressure to be zero. Using the present values of the Hubble parameter and the scale factor, WEC can be satisfied only when both the parameters $n$ and $\beta$ remain positive as indicated in Figure 4, where we have taken $0 < n < 1$ and $1 < \beta < 2$. In this case, scalar perturbations lead to the following constraints:

$$H^2(2+q) - \frac{cnHX^n\dot{\phi}}{a} + cn^2X^{n-1}\dot{X}\dot{\phi} + cnX^n\ddot{\phi} > \left(H - cnX^n\dot{\phi}\right)^2,$$
$$\left(\frac{-X + 12cnHX^n\dot{\phi} + 6nc(n-1)HX^n\dot{\phi} - 3H^2M_{pl}^2}{\left(HM_{pl}^2 - cnX^n\dot{\phi}\right)^2}\right) \times M_{pl}^2 > -3. \tag{39}$$

It is easy to check that the energy conditions are violated for $0.6 < n < 1$ and negative range of $\beta$ (e.g., $\beta = -10$). For this choice of parameters, the previous constraints are also violated, and hence the ghost instabilities occur. However, constraints imposed by tensor perturbations are trivially satisfied as $M_{pl}^2\phi > 0$.

*4.5. Covariant Galilean Model.* In the absence of potential, the covariant Galilean model [59] is defined by the following choice of parameters in action (6):

$$K = -c_2X, \qquad G_3 = \frac{c_3}{M^3}X, \qquad G_4 = \frac{M_{pl}^2}{2} - \frac{c_4}{M^6}X^2, \qquad G_5 = \frac{3c_5}{M^9}X^2, \tag{40}$$

where $c_2$, $c_3$, $c_4$, and $c_5$ are dimensionless constants, while $M$ is constant with dimensions of mass. Using these values in (15), it follows that

$$\text{NEC}: \frac{1}{2\left(\left(M_{pl}^2/2\right) - \left(c_4/M^6\right)X^2\right)} \times \left[-2Xc_2 + 6XH\dot{\phi}\frac{c_3}{M^3} - 72H^2X^2\frac{c_4}{M^6} + 60H^3X^2\frac{c_5}{M^9} - 2X\ddot{\phi}\frac{c_3}{M^3} + 24HX\dot{X}\frac{c_4}{M^6} + 16\dot{H}X^2\frac{c_4}{M^6} - 12X^2 \times \left(2H\dot{H}\dot{\phi} + 3H^2\ddot{\phi}\right)\frac{c_5}{M^9} - 24H^2X^2\ddot{\phi}\frac{c_5}{M^9} + \rho^m + p^m\right] \geq 0,$$

$$\text{WEC}: \rho^{\text{eff}} + p^{\text{eff}} \geq 0,$$
$$\frac{1}{2\left(\left(M_{pl}^2/2\right) - \left(c_4/M^6\right)X^2\right)} \times \left[-Xc_2 + 6XH\dot{\phi}\frac{c_3}{M^3} - 96H^2X^2\frac{c_4}{M^6} + 84H^3X^2\dot{\phi}\frac{c_5}{M^9} + \rho^m\right] \geq 0,$$

$$\begin{aligned}
&\text{SEC}: \ \rho^{\text{eff}} + p^{\text{eff}} \geq 0, \\
&\frac{1}{2\left(\left(M_{pl}^2/2\right) - \left(c_4/M^6\right)X^2\right)} \\
&\times \Bigg[-4Xc_2 + 6XH\dot{\phi}\frac{c_3}{M^3} \\
&\quad - 6X\ddot{\phi}\frac{c_3}{M^3} + 24XH^2\frac{c_4}{M^6} - 48H^2X^2\frac{c_4}{M^6} \\
&\quad + 12H^3X^2\dot{\phi}\frac{c_5}{M^9} - 180H^2X^2\ddot{\phi}\frac{c_5}{M^9} - 72X^2H\dot{H}\dot{\phi} \\
&\quad \times \frac{c_5}{M^9} + 48X\dot{X}H\frac{c_4}{M^6} + 48X^2\dot{H}\frac{c_4}{M^6} + 24HX\dot{X} \\
&\quad \times \frac{c_4}{M^6} + 72H^2X^2 \times \frac{c_4}{M^6} + \rho^m + 3p^m\Bigg] \geq 0, \\
&\text{DEC}: \ \rho^{\text{eff}} + p^{\text{eff}} \geq 0, \quad \rho^{\text{eff}} \geq 0, \\
&\frac{1}{2\left(\left(M_{pl}^2/2\right) - \left(c_4/M^6\right)X^2\right)} \\
&\times \Bigg[6XH\dot{\phi}\frac{c_3}{M^3} + 2X\ddot{\phi}\frac{c_3}{M^3} - 72H^2X^2\frac{c_4}{M^6} - 48XH^2\frac{c_4}{M^6} \\
&\quad + 108H^3X^2\dot{\phi}\frac{c_5}{M^6} - 24HX\dot{X}\frac{c_4}{M^6} - 16\dot{H}X^2\frac{c_4}{M^6} \\
&\quad + 12X^2\left(2H\dot{H}\dot{\phi} + 2H^2\ddot{\phi}\right)\frac{c_5}{M^9} + 24H^2X^2\ddot{\phi}\frac{c_5}{M^9} \\
&\quad + \rho^m - p^m\Bigg] \geq 0.
\end{aligned} \tag{41}$$

By taking the power law ansataz for scalar field and consequently, for kinetic term $X$, the WEC in terms of present values of the involved parameter require the following inequalities:

$$\begin{aligned}
&\frac{1}{\left(1 - \left(c_4\beta^4H_0^4/2M^6\right)\right)} \\
&\times \Bigg[-c_2H_0^2\beta^2 + \frac{3H_0^4c_3\beta^3}{M^3} - \frac{18H_0^6\beta^4c_4}{M^6} \\
&\quad + \frac{15H_0^7\beta c_5}{M^9} - \beta^3H_0^4\left(\beta - 1 - q_0\right)\frac{c_3}{M^3} \\
&\quad + 24H_0^6\beta^4\left(\beta - 1 - q_0\right)\frac{c_4}{M^6} - 16H_0^6\beta^4 \times \left(1 + q\right)\frac{c_4}{M^6} \\
&\quad - 3H_0^4\beta^4\left(3H_0^4\beta\left(\beta - 1 - q_0\right) - 2H_0^4\beta\left(1 + q\right)\right)\frac{c_5}{M^9} \\
&\quad - 6H_0^8\beta^5\left(\beta - 1 - q_0\right)\frac{c_5}{M^9}\Bigg] \geq 0, \\
&\frac{1}{\left(1 - \left(c_4\beta^4H_0^4/2M^6\right)\right)} \\
&\times \left[-\frac{H_0^2\beta^2c_2}{2} + \frac{3c_3H_0^4\beta^3}{M^3} - \frac{24H_0^6\beta^4c_4}{M^6} + \rho_0^m\right] \geq 0.
\end{aligned} \tag{42}$$

Clearly, these conditions are satisfied when both $G_4$ and terms inside the brackets are positive. Since $G_4 > 0$ requires $\beta > (7.5M^6/c_4)^{1/4}$, therefore a suitable choice of all these parameters yield the consistency with WEC if parameter $\beta$ remains small and positive ($\beta < 7.8$), while $c_2$ remains negative as shown in Figure 5. Here we have taken $-5 < c_2 < -1$ or $-50 < c_2 < -10$, and $5.5 < \beta < 8$. In this case, tensor perturbations suggest the following conditions for the avoidance of ghost instabilities:

$$\begin{aligned}
\mathcal{F}_T &= M_{pl}^2 - 2X^2\frac{c_4}{M^6} - 12X^2\ddot{\phi}\frac{c_5}{M^9} > 0, \\
\mathcal{G}_T &= M_{pl}^2 + 6X^2\frac{c_4}{M^6} - 12X^2\dot{\phi}H\frac{c_5}{M^9} > 0.
\end{aligned} \tag{43}$$

Clearly, the energy conditions are violated for $\beta > 8$ with $-5 < c_2 < -1$. For this choice of parameters, the previous constraints imposed by tensor perturbations are also violated, and consequently the ghost instabilities exist. However, scalar perturbations lead to very complicated expressions, so we consider only the conditions imposed by tensor perturbations.

## 5. Summary

The most general scalar-tensor theory being a combination of various DE proposals provides a vast gravitational framework for the discussion of accelerated expansion of the universe. The modified theories involve some extradegrees of freedom that are described by the models with some unknown parameters. It would be interesting to restrict these parameters on physical grounds. In cosmology, this can be done by making compatibility with local gravity tests. In a gravitational theory, energy conditions can be used as an approach to restrict these parameters. In the present paper, we consider the most general scalar-tensor gravity with the field equations involving second-order derivatives. Firstly, we have explored the effective energy-momentum tensor and its trace by inverting the generalized field equations which can be used to find the energy condition bounds for any spacetime manifold.

In order to describe these conditions for specific cases, we consider flat FRW universe model with perfect fluid. By defining the effective energy density and pressure, we have expressed the strong, weak, null, and dominant energy conditions. For the sake of convenience, we have assumed that the scalar field evolves as a power of scale factor. Also, the derivative terms are removed by expressing these conditions in terms of cosmological quantities like deceleration, snap and jerk parameters. An estimation to the present values of these parameters is available in literature [53] that can be used to find the constraints on free parameters of the model. The derived energy conditions are the most general in nature involving many arbitrary functions $K$, $G_3$, $G_4$, and $G_5$ that correspond to different DE proposals.

For the application of these energy conditions, we have taken different choices of the functions $K, G_3, G_4$, and $G_5$ and have deduced the energy conditions for $k$-essence model, BD gravity, $f(R)$ theory, kinetic gravity braiding, and covariant

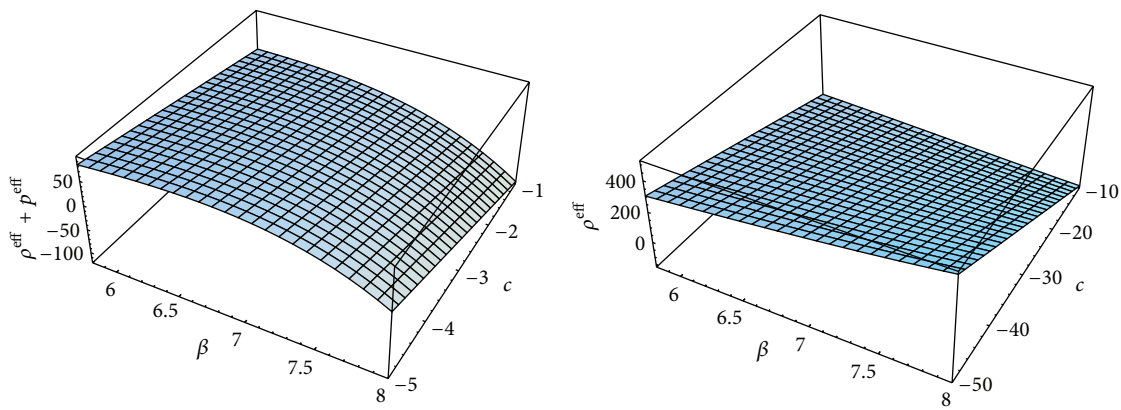


(a) $\rho^{\text{eff}} + p^{\text{eff}} \geq 0$ (b) $\rho^{\text{eff}} \geq 0$

Figure 5: Plots (a) and (b) show WEC versus parameters $c_2$ and $\beta$ with $c_3 = 2$, $c_4 = 4$, $c_5 = 3$, and $M = 2$.

Galilean model. In each case, there are many free parameters. It is not possible to find their range that would be consistent with energy conditions as well. For this reason, we have specified some of these parameters and restricted the others. The results can be summarized in the following.

(i) The WEC in $k$-essence model is satisfied only if the free parameters satisfy $0 < M_0 < 1$, $\beta > 1.4$ with arbitrary $B$ and $\beta < 1.4$ with $B > 10$.

(ii) In the literature [40–42], using the equivalence between BD and $f(R)$ gravity ($\omega = 0$), it has been shown that $V_0$ should be negative. In our case ($\omega \neq 0$), the WEC restricts the parameter $\beta$ to be negative (the scalar field should be of contractive nature) for the positive present value of BD field potential, that is, $V_0 > 0$ which is physically correct. However, the condition $\rho^{\text{eff}} + p^{\text{eff}} \geq 0$ is satisfied only when we take $\beta < 0$ with arbitrary $\omega$ and $\beta > 0$ with $\omega > 0$. Thus it can be concluded that expanding scalar field with negative range of BD parameter allowed for cosmic expansion is inconsistent with the WEC.

(iii) In $f(R)$ gravity, many authors have used the energy conditions to find the constraints on the models like $f(R) = \alpha R^n$ or $R + \alpha R^n$ [40–42]. In the present case, we have found the constraints on the logarithmic $f(R)$ model. It is seen that the restrictions on free parameters $\alpha < 0$ and $q > 0$ are consistent with WEC.

(iv) In kinetic gravity braiding, the WEC is satisfied for the presented model only when $\beta > 0$ (that shows expanding scalar field) and $n > 0$.

(v) In covariant Galilean model of DE, the WEC is satisfied when free parameters of the model satisfy $\beta > (7.5M^6/c_4)^{1/4}$ and $c_2 < 0$.

All these results are also shown through graphs. Further, we have determined the conditions for the avoidance of ghost instabilities using the constraints based on the scalar and tensor perturbations proposed by Kobayashi et al. [31]. It is concluded that the violation of these energy conditions leads to the occurrence of ghost and gradient instabilities in the above-mentioned cases of the most general second-order scalar-tensor theory. It would be interesting to investigate the constraints on other DE models like exponential model of $f(R)$ gravity, other forms of potentials for BD gravity, and so forth by making them consistent with the energy conditions.

## Appendix

$$
\begin{aligned}
T_{\mu\nu}^{(\phi)} = {} & \frac{1}{2}K_X\nabla_\mu\phi\nabla_\nu\phi + \frac{1}{2}Kg_{\mu\nu} - \frac{1}{2}G_{3X}\Box\phi\nabla_\nu\phi\nabla_\mu\phi \\
& - \nabla_{(\mu}G_3\nabla_{\nu)}\phi + \frac{1}{2}g_{\mu\nu}\nabla_\lambda G_3\nabla^\lambda\phi + \frac{1}{2}G_{4X}R\nabla_\mu\phi\nabla_\nu\phi \\
& + \frac{1}{2}G_{4XX}\left[(\Box\phi)^2 - \left(\nabla_\alpha\nabla_\beta\phi\right)^2\right] \times \nabla_\mu\phi\nabla_\nu\phi \\
& + G_{4X}\Box\phi\nabla_\mu\nabla_\nu\phi - G_{4X}\nabla_\lambda\nabla_\mu\phi\nabla^\lambda\nabla_\nu\phi - 2\nabla_\lambda G_{4X} \\
& \times \nabla^\lambda\nabla_{(\mu}\phi\nabla_{\nu)}\phi + \nabla_\lambda G_{4X}\nabla^\lambda\phi\nabla_\mu\nabla\nu\phi \\
& - g_{\mu\nu}\left(G_{4\phi}\Box\phi - 2XG_{4\phi\phi}\right) - g_{\mu\nu} \\
& \times \Big[ - 2G_{4X\phi}\nabla_\alpha\nabla_\beta\phi\nabla^\alpha\phi\nabla^\beta\phi + G_{4XX}\nabla_\alpha\nabla_\lambda \\
& \quad \times\phi\nabla_\beta\nabla^\lambda\phi\nabla^\alpha\phi\nabla^\beta\phi + \frac{1}{2}G_{4X}\left[(\Box\phi)^2 - \left(\nabla_\alpha\nabla_\beta\phi\right)^2\right]\Big] \\
& - 2\left[G_{4X}R_{\lambda(\mu}\nabla_{\nu)}\phi\nabla^\lambda\phi - \nabla_{(\mu}G_{4X}\nabla_{\nu)} \times \phi\Box\phi\right] \\
& + g_{\mu\nu}\left[G_{4X}R^{\alpha\beta}\nabla_\alpha\phi\nabla_\beta\phi - \nabla_\lambda G_{4X}\nabla^\lambda\phi\Box\phi\right] \\
& - G_{4X}R_{\mu\alpha\beta\nu\beta} \times \nabla^\alpha\phi\nabla^\beta\phi + G_{4\phi\nabla_\mu\nabla_\nu\phi} + G_{4\phi\phi}\nabla_\mu\phi\nabla_\nu\phi \\
& - 2G_{4X\phi}\nabla^\lambda\phi\nabla_\lambda\nabla_{(\mu}\phi\nabla_{\nu)}\phi + G_{4XX}\nabla^\alpha\phi\nabla_\alpha\nabla_\mu\phi\nabla^\beta \\
& \times \phi\nabla_\beta\nabla_\nu\phi - G_{5X}R_{\alpha\beta}\nabla^\alpha\phi\nabla^\beta\nabla_{(\mu}\phi\nabla_{\nu)}\phi + G_{5X}
\end{aligned}
$$

$$
\begin{aligned}
&\times R_{\alpha(\mu}\nabla_{\nu)}\phi\nabla^{\alpha}\phi\Box\phi + \frac{1}{2}G_{5X}R_{\alpha\beta}\nabla^{\alpha}\phi\nabla^{\beta}\phi\nabla_{\mu}\nabla_{\nu}\phi \\
&\times \frac{1}{2}G_{5X}R_{\mu\nu\alpha\beta}\nabla^{\alpha}\phi\times\nabla^{\beta}\phi\Box\phi - G_{5X}R_{\alpha\lambda\beta(\mu}\nabla_{\nu)}\phi\nabla^{\lambda}\phi \\
&\times \nabla^{\alpha}\nabla^{\beta}\phi - G_{5X}R_{\alpha\lambda\beta(\mu}\nabla_{\nu)}\nabla^{\lambda}\phi\nabla^{\alpha}\phi\times\nabla^{\beta}\phi + \frac{1}{2} \\
&\times \nabla_{(\mu}\left[G_{5X}\nabla^{\alpha}\phi\right]\nabla_{\alpha}\nabla_{\nu)}\phi\Box\phi - \frac{1}{2}\nabla_{(\mu}\left[G_{5\phi}\nabla_{\nu)}\phi\right]\Box\phi \\
&+ \nabla_{\lambda}\left[G_{5\phi}\nabla_{(\mu}\phi\right]\nabla_{\nu)}\nabla^{\lambda}\phi - \frac{1}{2} \\
&\times \left[\nabla_{\lambda}\left(G_{5\phi}\nabla^{\lambda}\phi\right) - \nabla_{\alpha}\left(G_{5X}\nabla_{\beta}\phi\right)\nabla^{\alpha}\nabla^{\beta}\phi\right]\times\nabla_{\mu}\nabla_{\nu}\phi \\
&- \nabla^{\alpha}G_{5}\nabla^{\beta}\phi R_{\alpha(\mu\nu)\beta} + \nabla_{(\mu}G_{5}G_{\nu)\lambda}\nabla^{\lambda}\phi - \frac{1}{2}\nabla_{(\mu}G_{5X}\nabla_{\nu)}\phi \\
&\times \left[(\Box\phi)^{2} - \left(\nabla_{\alpha}\nabla_{\beta}\phi\right)^{2}\right] + \nabla^{\lambda}G_{5}R_{\lambda(\mu}\nabla_{\nu)}\phi \\
&- \nabla_{\alpha}\left[G_{5X}\nabla_{\beta}\phi\right]\nabla^{\alpha}\nabla_{(\mu}\phi\nabla^{\beta}\nabla_{\nu)}\phi + \nabla_{\beta}G_{5X} \\
&\times \left[\Box\phi\nabla^{\beta}\nabla_{\mu}\phi - \nabla^{\alpha}\nabla^{\beta}\phi\nabla_{\alpha}\nabla_{(\mu\phi}\right]\nabla_{\nu)}\phi - \frac{1}{2}\nabla^{\alpha}\phi \\
&\times \nabla_{\alpha}G_{5X}\left[\Box\phi\nabla_{\mu}\nabla_{\nu}\phi - \nabla_{\beta}\nabla_{\mu}\phi\nabla_{\beta}\nabla_{\nu}\phi\right] + \frac{1}{2}G_{5X}G_{\alpha\beta} \\
&\times \nabla^{\alpha}\nabla^{\beta}\phi\nabla_{\mu}\phi\nabla_{\nu}\phi + \frac{1}{2}G_{5X}\Box\phi\nabla_{\alpha}\nabla_{\mu}\phi\nabla^{\alpha}\nabla_{\nu}\phi \\
&- \frac{1}{2}G_{5X}(\Box\phi)^{2}\nabla_{\mu}\nabla_{\nu}\phi - \frac{1}{12}G_{5XX} \\
&\times \left[(\Box\phi)^{3} - 3(\Box\phi)\left(\nabla_{\alpha}\nabla_{\beta}\phi\right)^{2} + \left(\nabla_{\alpha}\nabla_{\beta}\phi\right)^{3}\right] \\
&\times \nabla_{\mu}\phi\nabla_{\nu}\phi - \frac{1}{2}\nabla_{\lambda}G_{5}G_{\mu\nu}\nabla^{\lambda}\phi - g_{\mu\nu} \\
&\times \left\{-\frac{1}{6}G_{5X}\left[(\Box\phi)^{3} - 3(\Box\phi)\left(\nabla_{\alpha}\nabla_{\beta}\phi\right)^{2} + \left(\nabla_{\alpha}\nabla_{\beta}\phi\right)^{3}\right]\right. \\
&\quad\times \nabla_{\alpha}G_{5}R^{\alpha\beta}\nabla_{\beta}\phi - \frac{1}{2}\nabla_{\alpha}\left(G_{5\phi}\nabla^{\lambda}\phi\right)\Box\phi \\
&\quad+ \frac{1}{2}\nabla_{\alpha}G_{5\phi}\nabla_{\beta}\phi\nabla^{\alpha}\nabla^{\beta}\phi - \frac{1}{2}\nabla_{\alpha}G_{5X}\nabla^{\alpha}X\Box\phi \\
&\quad+ \frac{1}{2}\nabla_{\alpha}G_{5X}\nabla_{\beta}X\nabla^{\alpha}\nabla^{\beta}\phi - \frac{1}{4}\nabla^{\lambda}G_{5X}\nabla_{\lambda}\phi \\
&\quad\times \left[(\Box\phi)^{2} - \left(\nabla_{\alpha}\nabla_{\beta}\phi\right)^{2}\right] + \frac{1}{2}G_{5X}R_{\alpha\beta} \\
&\quad\left.\times\nabla^{\alpha}\phi\nabla^{\beta}\phi\Box\phi - \frac{1}{2}G_{5X}R_{\alpha\lambda\beta\rho}\right\}.
\end{aligned}
\tag{A.1}
$$

## References


[1] S. Perlmutter, G. Aldering, and M. Della Valle, "Discovery of a supernova explosion at half the age of the Universe," *Nature*, vol. 391, pp. 51–54, 1998.

[2] A. G. Riess, A. V. Filippenko, and P. Challis, "Observational evidence from supernovae for an accelerating universe and a cosmological constant," *The Astronomical Journal*, vol. 116, no. 3, p. 1009, 1998.

[3] M. Tegmark, M. A. Strauss, M. R. Blanton et al., "Cosmological parameters from SDSS and WMAP," *Physical Review D*, vol. 69, Article ID 103501, 26 pages, 2004.

[4] E. Komatsu, J. Dunkley, M. R. Nolta et al., "Five-year *wilkinson microwave anisotropy probe* observations: cosmological interpretation," *The Astrophysical Journal*, vol. 180, no. 2, p. 330, 2009.

[5] M. C. Bento, O. Bertolami, and A. A. Sen, "Generalized Chaplygin gas, accelerated expansion, and dark-energy-matter unification," *Physical Review D*, vol. 66, Article ID 043507, 5 pages, 2002.

[6] Y. Fujii, "Origin of the gravitational constant and particle masses in a scale-invariant scalar-tensor theory," *Physical Review D*, vol. 26, no. 10, pp. 2580–2588, 1982.

[7] B. Ratra and P. J. E. Peebles, "Cosmological consequences of a rolling homogeneous scalar field," *Physical Review D*, vol. 37, no. 12, pp. 3406–3427, 1988.

[8] T. Chiba, N. Sugiyama, and T. Nakamura, "Cosmology with x-matter," *Monthly Notices of the Royal Astronomical Society*, vol. 289, p. L5, 1997.

[9] R. R. Caldwell, R. Dave, and P. J. Steinhardt, "Cosmological imprint of an energy component with general equation of state," *Physical Review Letters*, vol. 80, no. 8, pp. 1582–1585, 1998.

[10] C. Armendáriz-Picón, T. Damour, and V. Mukhanov, "*k*-inflation," *Physics Letters B*, vol. 458, no. 2-3, pp. 209–218, 1999.

[11] T. Chiba, T. Okabe, and M. Yamaguchi, "Kinetically driven quintessence," *Physical Review D*, vol. 62, Article ID 023511, 8 pages, 2000.

[12] L. P. Chimento, "Extended tachyon field, Chaplygin gas, and solvable *k*-essence cosmologies," *Physical Review D*, vol. 69, no. 12, Article ID 123517, 10 pages, 2004.

[13] S. Weinberg, "The cosmological constant problem," *Reviews of Modern Physics*, vol. 61, no. 1, pp. 1–23, 1989.

[14] T. Padmanabhan, "Dark energy and gravity," *General Relativity and Gravitation*, vol. 40, no. 2-3, pp. 529–564, 2008.

[15] F. S. N. Lobo, "The dark side of gravity: modified theories of gravity," *Dark Energy-Current Advances and Ideas*, http://arxiv.org/abs/0807.1640 .

[16] E. E. Flanagan, "Higher-order gravity theories and scalar-tensor theories," *Classical and Quantum Gravity*, vol. 21, no. 2, pp. 417–426, 2004.

[17] S. Nojiri and S. D. Odintsov, "Introduction to modified gravity and gravitational alternative for dark energy," *International Journal of Geometric Methods in Modern Physics*, vol. 4, no. 1, pp. 115–145, 2007.

[18] K. Karami and M. S. Khaledian, "Reconstructing *f(R)* modified gravity from ordinary and entropy-corrected versions of the holographic and new agegraphic dark energy models," *Journal of High Energy Physics* , vol. 2011, article 086, 2011.

[19] C. H. Brans and R. H. Dicke, "Mach's principle and a relativistic theory of gravitation," *Physical Review*, vol. 124, pp. 925–935, 1961.

[20] P. A. M. Dirac, "A new basisfor cosmology," *Proceedings of the Royal Society A*, vol. 165, pp. 199–208, 1938.

[21] M. Mohseni, "Non-geodesic motion in $f(G)$ gravity with non-minimal coupling," *Physics Letters B*, vol. 682, no. 1, pp. 89–92, 2009.

[22] A. D. Felice and S. Tsujikawa, "Solar system constraints on $f(G)$ gravity models," *Physical Review D*, vol. 80, Article ID 063516, 15 pages, 2009.

[23] E. V. Linder, "Einstein's other gravity and the acceleration of the universe," *Physical Review D*, vol. 81, Article ID 127301, 3 pages, 2010.

[24] R. Myrzakulov, "Accelerating universe from *F(T)* gravity," *The European Physical Journal C*, vol. 71, article 1752, 2011.

[25] T. Harko et al., "*f(R,T)* gravity," *Physical Review D*, vol. 84, Article ID 024020, 11 pages, 2011.

[26] A. D. Linde, "A new inflationary universe scenario: a possible solution of the horizon, flatness, homogeneity, isotropy and primordial monopole problems," *Physics Letters B*, vol. 108, no. 6, pp. 389–393, 1982.

[27] A. D. Linde, "Chaotic inflation," *Physics Letters B*, vol. 129, no. 3-4, pp. 177–181, 1983.

[28] J. Garriga and V. F. Mukhanov, "Perturbations in $k$-inflation," *Physics Letters B*, vol. 458, no. 2-3, pp. 219–225, 1999.

[29] G. W. Horndeski, "Second-order scalar-tensor field equations in a four-dimensional space," *International Journal of Theoretical Physics*, vol. 10, no. 6, pp. 363–384, 1974.

[30] C. Deffayet et al., "From $k$-essence to generalized Galileons," *Physical Review D*, vol. 84, Article ID 064039, 15 pages, 2011.

[31] T. Kobayashi, M. Yamaguchi, and J. Yokoyama, "Generalized $g$-inflation," *Progress of Theoretical Physics*, vol. 126, no. 3, pp. 511–529, 2011.

[32] A. D. Felice and S. Tsujikawa, "Inflationary non-Gaussianities in the most general second-order scalar-tensor theories," *Physical Review D*, vol. 84, Article ID 083504, 15 pages, 2011.

[33] A. D. Felice and S. Tsujikawa, "Conditions for the cosmological viability of the most general scalar-tensor theories and their applications to extended Galilean dark energy models," *Journal of Cosmology and Astroparticle Physics*, vol. 007, p. 1202, 2012.

[34] X. Gao and D. A. Steer, "Inflation and primordial non-Gaussianities of generalized Galileans," *Journal of Cosmology and Astroparticle Physics*, vol. 019, p. 12, 2011.

[35] R. Kimura, T. Kobayashi, and K. Yamamoto, "Vainshtein screening in a cosmological background in the most general second-order scalar-tensor theory," *Physical Review D*, vol. 85, Article ID 024023, 11 pages, 2012.

[36] S. W. Hawking and G. F. R. Ellis, *The Large Scale Structure of Space-Time*, Cambridge University Press, London, UK, 1973.

[37] R. Schoen and S. T. Yau, "Proof of the positive mass theorem. II," *Communications in Mathematical Physics*, vol. 79, no. 2, pp. 231–260, 1981.

[38] S. Carroll, *Spacetime and Geometry—An Introduction to General Relativity*, Addison Wesley, San Francisco, Calif, USA, 2004.

[39] M. Visser, "Gravitational vacuum polarization. IV. Energy conditions in the Unruh vacuum," *Physical Review D*, vol. 56, no. 2, pp. 936–952, 1997.

[40] J. Santos, J. S. Alcaniz, M. J. Rebouças, and F. C. Carvalho, "Energy conditions in $f(R)$ gravity," *Physical Review D*, vol. 76, no. 8, Article ID 083513, 6 pages, 2007.

[41] J. Santos, M. J. Reboucas, and J. S. Alcaniz, "Energy conditions constraints on a class of $f(\mathrm{r})$-gravity," *International Journal of Modern Physics D* , vol. 19, p. 1315, 2010.

[42] Y. Y. Zhao, Y. B. Wu, J. B. Lu et al., "Modified *f(G)* gravity models with curvature-matter coupling," *The European Physical Journal C*, vol. 72, article 1924, 2012.

[43] N. M. Garcia, T. Harko, F. S. N. Lobo et al., "Energy conditions in modified Gauss-Bonnet gravity," *Physical Review D*, vol. 83, Article ID 104032, 8 pages, 2011.

[44] D. Liu and M. J. Reboucas, "Energy conditions bounds on *f(T)* gravity," *Physical Review D*, vol. 86, Article ID 083515, 8 pages, 2012.

[45] M. Sharif and M. Zubair, "Energy conditions constraints and stability of power law solutions in *f(R,T)* gravity," *Journal of the Physical Society of Japan*, vol. 82, p. 014002, 2013.

[46] S. Kar and S. Sengupta, "The raychaudhuri equations: a briet review," *Pramana*, vol. 69, no. 1, pp. 49–76, 2007.

[47] F. G. Alvarenga, M. J. S. Houndjo, A. V. Monwanou et al., "Testing some *f(R,T)* gravity models from energy conditions," *Journal of Modern Physcis*, vol. 7, 130 pages, 2013.

[48] S. M. Carroll, M. Hoffman, and M. Trodden, "Can the dark energy equation-of-state parameter $w$ be less than -1?" *Physical Review D*, vol. 68, Article ID 023509, 11 pages, 2003.

[49] T. Qiu, Y. Cai, and X. Zhang, "Null energy condition and dark energy models," *Modern Physics Letters A*, vol. 23, no. 32, p. 2787, 2008.

[50] O. Goldoni and M. F. A. da Silva, "Energy Conditions for Electromagnetic Field in presence of Cosmological Constant," Proceedings of Science.

[51] N. Banerjee and D. Pavón, "Holographic dark energy in Brans-Dicke theory," *Physics Letters B*, vol. 647, no. 5-6, pp. 477–481, 2007.

[52] A. Sheykhi, "Magnetic strings in $f(R)$ gravity," *General Relativity and Gravitation*, vol. 44, no. 9, pp. 2271–2281, 2012.

[53] S. Capozziello et al., "Cosmography in *f(T)* gravity," *Physical Review D*, vol. 84, Article ID 043527, 11 pages, 2011.

[54] R. Myrzakulov, "Fermionic $K$-essence," http://arxiv.org/abs/1011.4337v5.

[55] Y. Arefva, N. V. Bulatov, L. V. Joukovskaya, and S. Yu. Vernov, "Null energy condition violation and classical stability in the Bianchi I metric," *Physical Review D*, vol. 80, no. 8, Article ID 083532, 13 pages, 2009.

[56] M. R. Setare and M. Jamil, "Holographic dark energy in Brans–Dicke cosmology with chameleon scalar field," *Physics Letters B*, vol. 690, no. 1, pp. 1–4, 2010.

[57] Z. Girones, "Cosmological data analysis of *f(R)* gravity models," *Journal of Cosmology and Astroparticle Physics*, vol. 11, p. 004, 2010.

[58] C. Deffayet et al., "Imperfect dark energy from kinetic gravity braiding," *Journal of Cosmology and Astroparticle Physics*, vol. 10, p. 026, 2010.

[59] G. Dvali and M. S. Turner, "Dark energy as a modification of the friedmann equation," http://arxiv.org/abs/astro-ph/0301510.